Energy Conservation Measures and Costs

TEN is pleased to submit the following Energy Conservation Measures (ECMs) for DGS consideration. This proposal was developed under the parameters identified in the RFP inclusive of bulletins 1-5 received by TEN. The proposed project is self-funding through guaranteed savings within 12 years (inclusive of the construction period).

Key features of the proposal include:

- Facility Thermal Building System upgrades including:
  - replacement and removal of the window A/C units with installation of new units or upgrading existing units
  - remove existing window units and install 3 new exterior and 38 interior Samsung VRF units to serve the Mellor Building
- TEN proposes to replace or repair the windows in Jones Dining and Armstrong Halls.
- The HVAC controls will be expanded or upgraded to save energy and allow access through on front end.
- There will be time of use control and management of the exhaust fans including the cooking hoods.
- A steam trap replacement plan will be implemented including insulation of bare pipe.
- A campus-wide LED replacement and retrofit project for the interior and exterior lighting fixtures.
- A campus-wide upgrade of the electrical distribution system including:
  - Replacement of the ancient electrical distribution panel inside of the Mellor Building.
  - Installation of new right-sized 12.45kV transformers with the exception of the new one serving the dorms.
  - Upgrade of the electrical feed to the campus including the installation of batteries in front of the utility meter.
  - Inclusion of PJM frequency regulation revenue to supplement savings and fund all the core ECMs.
- Installation of an electrical sub-metering system for all the buildings.

#	Energy Conservation Measure	Install Cost	Annual Energy Savings - $	Frequency Regulation Revenue - $	Annual kWh Savings	Annual kW Savings	Annual mmBTU Savings	Annual Kgal Savings
1	Facility Thermal Building Solutions							
1.1 a	Window AC Conversion (Mellor - VRV)	$ 324,581	$ 566		6,819		8	
1.1 b	Window AC Conversion (Kreider - Split Sys.)	$ 37,945	$ 195		2,334		3	
1.1 c	Window AC Conversion (Woolworth)	$ 13,048	$ 85		1,035		1	
1.2 a	Window System (Jones Replacement)	$ 349,972	$ 8,302		41,733		731	
1.2 b	Window System (Armstrong Repair)	$ 35,209	$ 647		2,896		61	
2	HVAC Measures							
2.1	Temperature Control Upgrades (EMS)	$ 454,013	$ 29,071		124,578		2,787	
2.2	Steam Trap Replacement (& bare line insulation)	$ 47,675	$ 13,745		-		1,939	
2.3	Exhaust Hood Control (Jones Dining Hall)	$ 52,405	$ 5,864		72,164		66	
2.4	Boiler Operational Improvements (reserved)							
2.5	Exhaust Fan Management	$ 12,667	$ 662		8,857			
3	Plumbing Measures	$ 51,056	$ 7,391				332	669
4	Electrical Measures							
4.1	Campus-wide LED Lighting Upgrade	$ 488,391	$ 44,082		597,701	178	(85)	
4.2	Distribution System Transformers & Battery Storage	$ 2,949,791	$ 4,407	$ 393,947	58,948			
4.3	Submeters	$ 144,898						
	Installation Total	**$ 4,961,654**	**$ 115,016**	**$ 393,947**	**917,065**	**178**	**5,843**	**669**

LESS City of Lancaster Water Credit	$ (7,468)
LESS Act-129 Incentives	$ (51,830)
ADD Capitalized Construction Interest	$ 74,425
Net Financed Amount	**$ 4,976,780**

The energy rates used to calculate savings are $0.0748 / kWh and $7.09 / MMBtu for natural gas used to generate steam and $7.53 / Kgal for water and sewer charges.

The baseline energy usage is based on the utility bills provided and the combined Energy Utilization Index (EUI) of approximately 88 kBtu/sqft.

Annual Financial Projections

The cash flow on the next page illustrates that the proposed project will pay for itself within 12 years (including construction) when modeled at a 3% interest rate. The net present value of the excess cash flow over 12 years is $116,573 based on a 3% discount rate. The columns in the cash flow represent the following:

A. Annual energy costs without improvements
B. Annual energy costs with improvements
C1. Annual energy cost savings (A-B)
C2. Annual Frequency Regulation Revenue
C3. Annual Energy Savings + Revenue
D. Payments for financing equipment
E. Payments for monitoring and maintenance services
F. Net annual benefit
G. Cumulative cash flow
H. Net Present Value of cash flow

Note: The payments in column D of the cash flow include the repayment of $74,475 in capitalized interest cost based on a six (6) month construction period as well as a reduction in the net financed amount for Act-129 PPL incentives in the amount of $51,830 and a $7,468 water billing error that TEN has already addressed on TSCT's behalf and the City of Lancaster has agreed to correct.

Additional Project Funding (not factored into the cash flow)

- Annual lighting Material Savings estimated as $9,167 per year
- PJM Permanent Capacity Reduction Payments. (Determined by annual auction price and paid out over four years.)

TEN will prepare the necessary documentation for these additional funding streams and present them to TSCT and DGS for signature and submission.

Energy Conservation Measure Descriptions

The following pages describe the technical feasibility, suitability, reasonableness, comprehensiveness and acceptability of the proposed ECMs. Quality of the proposed equipment was considered and is one of the key reasons TEN has included new LED fixtures across campus. Our unique approach to in-house lighting audits, design and typical material procurement provides TEN (and our customers) numerous advantages including lower material costs, installation labor flexibility and ultimately the opportunity to optimize project designs within available savings.

Project Cash flow

Year	Annual Energy Costs (Before) A	Annual Energy Costs (After) B	Annaul Energy Savings C1=(A-B)	Frequency Regulation Revenue C2	Annual Energy Savings + Revenue C3	Annual Financing Payments D	Annual M&V Payments E	Net Annual Benefit F	Cumulative Cashflow G
1	$ 534,885	$ 419,869	$ 115,016	$ 393,947	$ 508,963	$ 478,963	$ 30,000	$ -	$ -
2	$ 540,234	$ 424,068	$ 116,166	$ 397,886	$ 514,053	$ 484,053	$ 30,000	$ -	$ -
3	$ 545,636	$ 428,308	$ 117,328	$ 401,865	$ 519,193	$ 489,193	$ 30,000	$ -	$ -
4	$ 551,093	$ 432,591	$ 118,501	$ 405,884	$ 524,385	$ 520,751	$ -	$ 3,634	$ 3,634
5	$ 556,603	$ 436,917	$ 119,686	$ 409,943	$ 529,629	$ 522,313	$ -	$ 7,316	$ 10,950
6	$ 562,170	$ 441,287	$ 120,883	$ 414,042	$ 534,925	$ 523,880	$ -	$ 11,045	$ 21,996
7	$ 567,791	$ 445,699	$ 122,092	$ 418,183	$ 540,274	$ 525,452	$ -	$ 14,823	$ 36,819
8	$ 573,469	$ 450,156	$ 123,313	$ 422,365	$ 545,677	$ 527,028	$ -	$ 18,649	$ 55,468
9	$ 579,204	$ 454,658	$ 124,546	$ 426,588	$ 551,134	$ 528,609	$ -	$ 22,525	$ 77,993
10	$ 584,996	$ 459,205	$ 125,791	$ 430,854	$ 556,645	$ 530,195	$ -	$ 26,451	$ 104,443
11	$ 590,846	$ 463,797	$ 127,049	$ 435,163	$ 562,212	$ 531,785	$ -	$ 30,426	$ 134,870
12	$ 298,377	$ 234,217	$ 64,160	$ 219,757	$ 283,917	$ 266,690	$ -	$ 17,227	$ 152,096

Note: Year 12 only represents 6 months of cost, savings & revenue as the repayment term is 11.5 years NPV of Cashflow (column F): $116,573

Project Monitoring and Maintenance Services

The measurement and verification of the proposed ECMs is anticipated to be conducted according to the M&V plan identified on page 15 of the Technical Submission. Onsite measurements, field work and report generation will be prepared by Nikhil Singh a Certified Measurement and Verification Professional (CMVP) and Certified Energy Manager (CEM) in conjunction with Rick Ellison & Greg Lok. Rick also holds several certifications including Professional Engineer (PE), Certified Energy Manager (CEM) as well as a Certified Measurement and Verification Professional (CMVP). The pricing was based on TEN's original AFQ submission and allows for some latitude in the final M&V approaches chosen by DGS. The proposed M&V plan includes IPMVP options A, B, C & D.

It is anticipated that DGS will incorporate the upgraded systems into their preventative maintenance routines with the exception of the battery storage which includes maintenance as a means of ensuring availability and maximizing revenues. TEN's project management team will be available to facilitate warranty claims or repair work as necessary. Project training is included in the installation cost of the project.

Baseline Utility Data (per RFP)

Below is a summary of the utility data contained in the RFP and supplemented with additional information through Bulletins 1-5. This information was then analyzed to aid in identifying areas for energy savings and to ensure we did not over project savings in any one area of campus. As a result, the resulting analysis also served as an energy balance between bottom-up and top down savings calculations. Details of this analysis and all savings calculations can be found as an attachment to this section of the proposal. They were placed there to ensure compliance with the page limitations of this section of the RFP.

The first step in the energy analysis performed at TSCT was performing an end use analysis of where the energy is currently used. This was necessary because the electricity used by the buildings and the natural gas used to generate steam are measured by a single master meter. There is no record of what electricity and steam each building currently uses.

Utility	Usage	Cost
Electricity	**kWh**	
PPL - Electric Distribution Company	4,039,800	$ 31,907
Supply / Generation		$ 270,142
Sub-Total (electricity)		**$ 302,049**
Natural Gas	**MCF**	
Boiler Plant LDC	22,846	$ 91,631
Boiler Plant Supply		$ 91,905
Gym / MAC (other UGI bill)	342	$ 3,283
Sub-Total (natural gas)		**$ 186,819**
Water/Sewer/Stormwater	**Kgal**	
City of Lancaster	4,999	$ 46,017
Sub-Total (water/sewer/stormwater)		**$ 46,017**
TOTAL		**$ 534,885**

TEN took the electricity and natural gas used to generate steam and divided them amongst the buildings based on building usage and size. The Energy Usage Index (EUI) for the steam and electricity used by the campus as a whole was calculated to be 88 kBtu/sqft.

Not only was the energy divided between the buildings, but the energy consumed in the distribution systems also was investigated. The electricity consumed by the distribution transformers was estimated in the end use analysis. The natural gas lost in the boiler generating the steam and the system distributing the steam was also estimated in the end use analysis. This is an important step to ensure that the energy usage and savings for the buildings are not over-stated. Only a percentage of the energy measured at the master meters is actually consumed within the building.

After the distribution losses are taken into account, the resulting building EUI of 73 kBtu/sqft is significantly lower the initial apparent EUI of 88 kBtu/sqft suggested by the utility bills alone. TEN then determined what portion of the energy used within each building and by the utility system could be saved by the "Core Energy Conservation Measures" listed in the RFP.

The core ECM savings on the following pages are based on this analysis.

ECM 1 – Facility Thermal Building Systems

ECM 1.1 –Window Air Conditioning (AC) Unit Conversion

Existing Conditions

The Mellor Building, Kreider Building and Woolworth Building all utilize window air conditioning units. This project will allow for removal of these units which are typically considered only as temporary. During TEN's site visit, no window AC units were visible at the Leonard or Synder Buildings which is why they have been currently omitted from the project despite being identified on the RFP's core ECM list. Any window AC units in these buildings that were overlooked will be added to the ECM 1.1 scope.

The Mellor Building currently has individual Sanyo ductless split systems, Samsung VRF systems and window AC units for cooling. Our investigation disclosed that the systems are not sized adequately and all offices are not covered with AC. This was supported by some comments from the building occupants.

Heating is provided in these buildings by steam radiators and unit heaters that have thermostatic control but no time of day, occupied/unoccupied control.

Proposed Solution

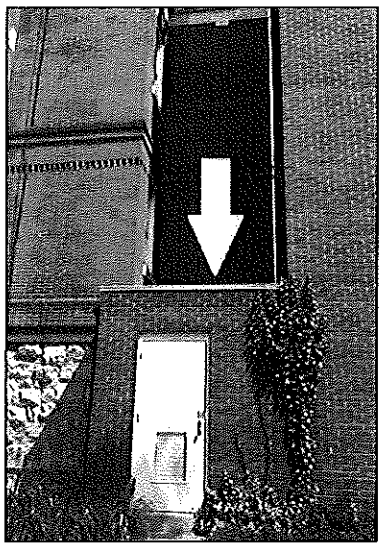

TEN proposes to remove the AC units in the Mellor Building. Additional cooling will be added to account for the window AC removal and for three existing indoor units that were not functioning properly. To fully meet the cooling loads in the building, three new exterior and 38 new interior Samsung VRF units will be installed to serve the Mellor Building. The roof on the elevator machine room will be re-enforced and concrete mounting pads poured. The exterior units will be installed there, and a brick colored screen installed to hide these units. The refrigerant will run through the janitor rooms to the left or the elevator shaft on the right to get to the attic. Then the refrigerant will be run down to the 38 new indoor units. The existing steam heat with thermostatic control valves will be utilized. A new slow acting steam control valve will be installed to provide time of day control of the building during heating periods.

The Kreider and Woolworth Buildings window air conditioning units will also be removed and new permanent split cooling systems will be installed. The existing steam heat will be utilized in the Kreider, Woolworth, Leonard and Synder Buildings. A new slow acting steam control valve will be installed to provide time of day control at the Leonard Building during heating periods.

In general, the removal of the window air conditioning units and replaced with more efficient units will directly save cooling energy and will indirectly reduce heating and cooling energy by reducing infiltration of unconditioned out door air. These savings are detailed in the calculations attachment.

It should be noted that TEN has assumed that TSCT is meeting current ventilation requirements for these buildings via operable windows. This will be verified during the Energy Audit Report. Should TSCT desire additional ventilation, it can be addressed via dedicated outside air systems.

TEN also evaluated the Schwalm Student Building's existing three heat pump systems. We do have a solution to recommission and re-balance these systems including the installation of Variable Frequency Drives (VFDs) to control the three air handler fan motors to provide variable air flow. Under this optional ECM, the three window AC units would then be removed. This solution is not included in the current package because of its long payback and desire to remain below the $5 million threshold of the Small GESA program.

Measurement and Verification

Window AC conversion M&V is anticipated to be completed using IPMVP option B utilizing existing equipment efficiencies as pre variables and new equipment efficiencies and DDC run-time trends data as post variables.

ECM 1.2 –Building Window Systems

Existing Conditions
The windows in Jones Dining and Armstrong Halls are either older single pane units that could be replaced or not operating properly and worthy of repair to improve the building envelope.

Proposed Solution
The windows in Jones Dining Hall will be replaced new thermally improved windows and those in Armstrong Hall repaired. This will save energy and improve comfort in these buildings.

Jones Dining Hall
- 2 – 50 foot wide curtainwall systems with one entry door in each and lower insulated panels
- 3 single fixed glass openings with upper insulated panel
- 2 - 20 foot wide curtainwall systems with 4 sections and upper glass transoms
- Existing doors to be reinstalled into the new curtainwall system. New glass to be installed in the reused doors to match new glass in new curtainwall

Armstrong Hall
- Repair and replacement of operating hardware in existing aluminum double hung windows in Armstrong Hall (hardware to include new sash balances, balance shoes, pivot bars and tilt release mechanisms.

Measurement and Verification
Window replacement and repair M&V is anticipated to be completed using IPMVP option D utilizing existing window performance data and a Trane Trace Energy Model as pre variables combined with new window performance data as post variables.

ECM 2 – HVAC Measures

ECM 2.1 – Temperature Control Upgrades (EMS - Campus Single Seat User Interface)

Existing Conditions
Presently the campus has a mix of different DDC systems, unitary systems, VRF systems and window AC systems for cooling and separate steam systems for heating. There is no single interface that can monitor or control these diverse systems.

Proposed Solution
Components of this system will include a fully mobile, device compliant interface for use with desktop, laptop, smart phone, and smart pad devices. The interface will have a floor plan graphical user interface as well as long term storage of trend and alarm histories via a desktop server. This central control will be used to optimize the operation of all the buildings and add time of day, setpoint monitoring, chilled water temperature and discharge air temperature to the applicable buildings. (i.e. Mellor does not have chillers so chilled water reset would not apply to it). Many of the buildings with existing DDCs where found to have opportunities to save energy through re-commissioning. That will be performed during the installation of this ECM.

Measurement and Verification
Temperature control and EMS upgrade M&V is anticipated to be completed using IPMVP option D utilizing a calibrated model from End-use model based on master meter data efficiencies as pre variables and the calibrated model based on actual sub-meter data and DDC run-time trend data as post variables.

ECM 2.2 – Steam Trap Repair/Replacement (and Bare Line Insulation)

Existing Conditions

Steam traps are a necessary part of any steam system. Traps are the devices that keeps the steam in any transportation or heat exchange equipment, and simultaneously allow condensed steam to pass through and ultimately be pumped back to the steam plant. Properly working traps maintain the integrity of the entire system and are necessary for proper temperature control. Steam is currently generated in the central steam plant and then is distributed to the campus buildings through a steam tunnel. A quick steam trap count estimates approximately 50 mechanical steam traps in the steam system, however TEN engineers were not able to test these traps since the steam system was turned 'off' for the summer season. Since traps are essentially a mechanical device, they are prone to failure just like any other device with moving parts. These parts are required to work in a harsh environment and so it is likely that the internal mechanisms will fail, fully or partially at some point in the future.

Insulation - Not all piping specialties such as pressure reducing valves or pumps were originally designed with insulation. This is typically the case since these items might require attention from time to time. Standard insulation was applied as a permanent system to the fixed piping, while not typically applied to those items which would otherwise require future repairs or access.

Over time, certain amounts of pipe or other items have their insulation removed or it was degraded to a point where their effectiveness was diminished markedly. When those situations occurred, heat loss from the pipe was carried into the space, thus wasting energy. It also causes a safety hazard for those working in the spaces & provide for higher than required temperatures in the mechanical spaces, often making them uncomfortable.

Proposed Solution

Steam Traps – Once the steam system is re-energized, TEN proposes to conduct a steam trap survey to evaluate the overall condition of the steam traps in this facility and has made a preliminary estimate of 14 traps requiring replacement or repair and the potential for savings. Apart from the properly working traps, the survey also identifies the condition in which the steam traps are failed. Conditions such as failed open, failed closed, blocked, or leaking are normally candidates for replacement.

Insulation – TEN has identified an opportunity to replace 133 lineal feet of piping to generate significant savings. Additional piping insulation has many benefits which justify this energy conservation measure (ECM). From an economic standpoint, properly designed and installed insulation systems immediately reduce the need for energy, a costly ingredient of every product made.

<u>Measurement and Verification</u>

Steam trap repair/replacement and insulation M&V is anticipated to be completed using IPMVP option A utilizing bare pipe and trap surveys as pre variables and trap surveys on operational systems with thermal gun and actual steam system operational hours as post variables.

ECM 2.3 – Exhaust Hood Control (Jones Dining Hall)

Existing Conditions

Presently the cooking hoods and the make-up air handling unit (AHU) serving them all work in a constant volume mode which moves the maximum amount of air whether or not it's needed. This in turn wastes energy.

Proposed Solution

A usage based control system will be installed on both cooking hoods. It will vary the speed based on the heat and/or smoke being given off by the cooking equipment. The exhaust fan and the make-up AHU will vary in speed and flow based on the usage of the kitchen cooking equipment. This will also include a new fan motor on the make-up fan unit, because the existing fan motor is not compatible with variable frequency drives.

As an optional, additional solution for TSCT and DGS consideration is refurbishment of AHU-2 and AHU-3. AHU-2 which serves the hood and AHU-3 which serves the kitchen were both in poor condition but great candidates for refurbishment. TEN proposes to further evaluate cleaning and sealing both of the AHUs located in the basement. This additional ECM was not included in the current package due to its not being specifically identified on the core ECM list and our desire to remain sufficiently below the $5 million threshold of the Small GESA program. Tighter pricing during the Energy Audit Report stage may allow for reconsideration of this additional ECM.

Measurement and Verification
Exhaust hood control M&V is anticipated to be completed using IPMVP option D utilizing a calibrated model from End-use model based on master meter data as pre variables and the models updated on actual sub meter data and DDC run-time trends data as post variables.

ECM 2.4 – Operational Improvement of the Boiler Operation

Existing Conditions
An amendment indicated that this ECM should be removed from the core ECM list because the steam system had already been shut down for the non-heating season.

Proposed Solution
If selected, TEN proposes to examine the operation of the steam system in the winter when it is fully operational.

ECM 2.5 – Exhaust Fan Management

Existing Conditions
Presently many of the existing exhaust fans do not have automatic controls.

Proposed Solution
As part of the lighting retrofit project all restrooms will have occupancy controls. These controls will use an extra set of dry contacts to turn off bathroom exhaust fans after the bathrooms have been empty for a predetermined (and TSCT adjustable) length of time.

As part of installing local controls that are interfaced to a central control interface, the larger exhaust fans will be programmed to turn off during unoccupied periods the same way the space temperatures will be setback.

Measurement and Verification
Exhaust fan management M&V is anticipated to be completed using IPMVP option A utilizing surveys of existing fans as pre variables and verification of occupancy operation and DDC run-time trends data as post variables.

A summary of the applicability of the ECM 2.1 through ECM 2.5 to each of the buildings is shown in the table on the following page.

ECM Description	Thaddeus Stevens Buildings															
	Alumni	Armstrong	Bourne	Brenner	Herrington	Hartzel	Jones	Kreider	Leonard	LRC	MAC	Maintenanc	Mellor	Metzger	Schwalm	Snyder	Woolworth
2.1- Campus Single Seat User Interface	CORE	CORE	CORE	CORE	CORE	CORE	CORE	CORE	CORE	CORE	CORE	CORE	CORE	CORE	CORE	CORE	CORE
2.1 – HX Controls Upgrade and OA Reset Scheduling		EXISTS	EXISTS	EXISTS	EXISTS	EXISTS	CORE	CORE		EXISTS	EXISTS			EXISTS		CORE	CORE
2.1 – HVAC Monitoring & Scheduling of Heating & Cooling		EXISTS	EXISTS	EXISTS	EXISTS	EXISTS	CORE	CORE	CORE	EXISTS	EXISTS		CORE	EXISTS	CORE	CORE	CORE
2.1 -Add Steam control Valve Building Shutdown									CORE				CORE			EXISTS	EXISTS
2.1 - DDC Re-Commissioning		CORE	CORE	CORE	CORE	CORE				CORE	CORE			CORE			
2.2 – Campus Buildings Sub-Metering Steam	CORE	CORE	CORE	CORE	CORE	CORE	CORE	CORE	CORE	CORE	CORE	CORE	CORE	CORE	CORE	CORE	CORE

C O R E - Means included in the core ECMs
E X I S T S - Means already present

ECM Description	Thaddeus Stevens Buildings															
	Alumni	Armstrong	Bourne	Brenner	Herrington	Hartzel	Jones	Kreider	Leonard	LRC	MAC	Maintenanc	Mellor	Metzger	Schwalm	Snyder	Woolworth
2.3 – Jones Dining Hall HVAC: Provide basic DDC scheduling of AHU-2, AHU-3 & EF's							CORE										
2.3 – Jones Dining Hall HVAC: Usage COREd VAV control with kitchen hood make-up and exhaust – MeLink							CORE										
2.4 – DDC Monitor Boiler												CORE					
2.4 – Replace/ Repair Traps & Insulate bare steam pipes		CORE	CORE	CORE	CORE	CORE	CORE	CORE	CORE	CORE	CORE	CORE	CORE	CORE	CORE	CORE	CORE
2.5 – Bathroom Exhaust Fan Management, Part of Lgt Control	CORE	CORE	CORE	CORE	CORE	CORE	CORE	CORE	CORE	CORE	CORE	CORE	CORE	CORE	CORE	CORE	CORE
2.5 – shop & general Exhaust Fan Management		CORE	CORE	CORE	CORE	CORE	CORE	CORE	CORE	CORE	CORE	CORE	CORE	CORE		CORE	CORE

C O R E - Means included in the core ECMs
E X I S T S - Means already present

ECM 3 – Plumbing Measures – Domestic Water Upgrade

Existing Conditions

A preliminary domestic water audit was conducted by TEN which included administrative offices, classroom application, dormitory housing and athletics building types. Facility personnel noted that some toilets and urinals in the facility have already been converted or replaced with low flow tank type or new low flow fixtures.

TEN proposes to implement water conservation upgrades for the following site(s):
This measure applies to the following sites: Armstrong Hall, Herrington Hall, Bourne Hall, Metzger Hall, Brenner Hall, Mellor Building, Tom Hence Building (College Store), Schwalm Student Center, Hartzell Building, Jones Dining Hall, Multipurpose Activity Center (MAC) Building, Woolworth Building, Snyder Building, Leonard Building, Kreider Building.

TEN proposes to improve the performance and efficiency of washroom plumbing fixtures at the site(s) noted. TEN proposes to apply several water conservation strategies. Water and sewer savings for this ECM are derived from reduced water flow at the fixture, either by fixture replacement or by the installation of new accessories (i.e., faucets, heads, or restrictors).

Based on its engineering analysis, TEN was able to account for the majority of metered water usage at the site. Retrofits or replacement are proposed for high flow toilets, sinks and urinals. Existing low flow units, and flushometers adjusted to lower flush rates will not be addressed under this scope.

Proposed Conditions

The following components and services shall be provided -

- **Replace Existing Toilets with New Toilets:** This ECM will install (13) new low flow 1.28 gpf toilets including removal of existing fixtures. Per the table listings, existing floor mount type toilets will be replaced with new higher efficient type toilets due to proposed design water conservation measure. The new water closets will reduce water consumption by replacing the older equipment that consumes 3.5 gpf. Replacement, rather than retrofit, is proposed for toilet china due to the inability of older designs to clear effectively at lower flow rates. Open elongated seat with stainless steel hardware will be included per unit. Existing Water closets currently flushing at or near 1.6 gpf will not be retrofit under the proposed scope.

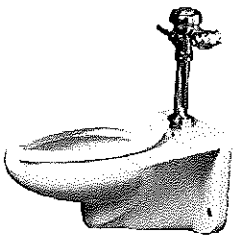

- **Replace Existing Urinals with New Low Flow Flushometers:** This ECM will install (71) new low flow 0.5 gpf urinal piston type flush valves. Per the table listings, existing wall mount type urinals will only be retrofitted with new higher efficient type piston flushometer due to proposed design water conservation measure economics. The new piston type flush valve will reduce water consumption by replacing the older equipment that consumes 2.5 gpf.

- **Upgrade Faucet Flow Controls:** The bathroom faucets listed can accommodate standard aerators. This scope will remove (161) of the existing faucet units with aerators and in certain cases where the existing faucet controls are unserviceable or are in disrepair, TEN will install a new two handle faucet unit along with a 0.5 gpm aerators.

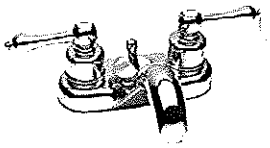

- **Shower Units / ADA:** (82) Existing 2.5 gpm shower head units for standard and ADA residential living spaces as well as athletic areas in the Multipurpose Activity Center (MAC) will be replaced with a new 1.5 gpm shower head unit. Standard residential bathroom showers will have a standard replacement shower head unit. ADA shower units will have a 1.5 gpm showerhead and handheld wand combo unit.

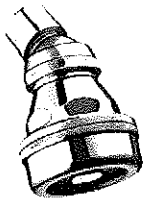

Baseline Energy

To evaluate the savings for each retrofit, TEN compiled water consumption estimates for each end use. We compared our tabulation of water use to the bill history on a month-by-month basis, thereby assuring a reasonable level of confidence in the evaluation of current use.

Our savings estimate is built directly from the refined user frequencies used to balance the baseline. Reconciling the baseline also enables TEN to better identify other areas in which water can be saved. At the main campus, the main water service satisfies primarily washroom loads. Minor uses include kitchen and housekeeping consumption. Make-up to the heating water and chilled water systems is estimated to be negligible. Based on its engineering analysis, TEN was able to account for the majority of metered water usage at the site.

The tables appended show approximate counts of surveyed fixtures.

Fixture Type	Post Description	Qty
Floor Mount ADA	New Floor Mount Bottom Discharge ADA Height China	13
Urinal Valve 3/4" VT	New Urinal .5 gpf Piston Valve, Manual Flush, 3/4" Vacuum Breaker Tube	71
Aerator	New .5 gpm Aerator	161
Shower Head	New 1.5 gpm Shower Head	82
Seat Open SS Hardware	New Open Seat, No Lid, Stainless Steel Hardware	13
	TOTAL	340

Measurement and Verification
Plumbing measure M&V is anticipated to be completed using IPMVP option A utilizing detailed survey of existing fixtures and flow measurement of sample set of existing fixtures as pre variables and flow measurement of sample set of new fixtures as post variables.

ECM 4 – Electrical Measures

ECM 4.1 Campus-wide LED Lighting Upgrade

Existing Conditions
Existing Lighting Systems
Ten conducted a preliminary lighting walkthrough which included administrative offices, classroom application, dormitory housing and athletics building types. The primary interior lighting consists of fluorescent lighting technologies including T12 linear lamps and magnetic ballasts, second generation T8 linear lamps and electronic ballasts and High Intensity Discharge (HID) lamps and magnetic transformers. Compact fluorescent medium based screw-in lamps and fluorescent plug-in fluorescent lamps are also prevalent to the facilities interior. Most exit signs sampled were LED or previously retrofitted with LED kits, therefore they are not considered for upgrade. The exterior site lighting, building façades and perimeters, in and around the campus consists of multiple types of HID luminaires. The existing exterior luminaires are a variety of wall pack, flood type and pole mounted shoebox and acorn style luminaires with varying wattages.

Proposed Solution
TEN proposes to optimize the existing lighting systems for both interior and exterior areas to maximize the overall electric savings. This will help to achieve a cost effective, long-life and high efficient lighting system. The project scope includes the following:

Exterior lighting solutions
- Replace the existing HID perimeter wall-packs with new high efficient LED wall-packs. New LED wall-packs are equipped with photocell sensors for automatic dusk to dawn operation for fixed hours of operation.
- Replace exiting pole mounted HID flood type and shoebox style luminaires with a new high efficient LED equivalent luminaire. The new LED flood luminaires are located on building facades as well as pole mounted. For pole mount installation, they will be installed on existing poles. The existing shoebox type luminaires will be replaced with a new LED area light luminaire with improved light distribution and photometrics. This will concentrate more light to the walking surface where it is most needed.
- Various building facades have already been upgraded with high efficient RAB LED exterior luminaires

Interior lighting solutions
The main component areas as it relates to each site included in our lighting scope are office areas, both open floor plan and individual offices, classrooms, dormitory housing, gymnasium / fitness center and common spaces. Each of the buildings with these specific lighting systems are as follows:

Proposed Lighting Solutions-
- Thaddeus Stevens School of Technology has been very proactive in maintaining the current lighting system and in most areas, the existing fixtures are in great condition. Areas where existing linear fluorescent T8

lamps and luminaires are serviceable and in good working order, will be retrofitted with a high efficient 15w linear LED lamp with external driver lighting system.

- Retrofit 2x2 recessed troffer fixtures which contain U-bend style lamps with a 2 lamp, 2x2 reflector panel kit and new 10w linear LED lamps and high efficient external driver.
- 2x4 luminaires with 3 or 4 lamps will be de-lamped using a 2 lamp, 2x4 reflector panel kit and new 18w linear LED lamps and high efficient external driver.
- Occupancy sensors will be utilized in highly occupied areas to maximize savings by reducing hours of operation. Dual technology versions use ultrasonic and infrared to ensure power savings and occupancy detection. Self-adaptive or self-learning technology, eliminates the need for manual range adjustments.
- In the Multipurpose Activity Center (MAC) building, the gymnasium HID high bay fixtures will be upgraded with high efficient LED high bay luminaires integrated with ZigBee wireless controls for greater flexibility for scene control and occupancy scheduling. The proposed lighting system will have the ability to control individual or multiple luminaires via a mobile phone or tablet device with the Global Link™ application.

Through the implementation of these retrofits, Thaddeus Stevens School of Technology will realize additional savings in the reduction of replacement materials, either through the extended warranties, reduced energy usage of proposed LED luminaires, lamps and drivers, as well as the increase of operating life of new equipment. PPL Utility rebate incentives will be realized but not guaranteed based on the proposed LED lighting upgrade as per the utility rebate incentive program and current available funds.

Coordination for all site construction activities will include TEN construction team personnel along with Thaddeus Stevens facilities personnel. This will include a proposed construction schedule of installation, duration of construction activities, and notifications to occupied tenant spaces where lighting construction would occur. Logistics associated with product deliveries, product material storage, disposal and recycling of existing lighting material will also be coordinated with TEN construction team personnel and Thaddeus Stevens facilities personnel.

Quantity Summary of Proposed Lighting Upgrades

Retrofit Type	Quantity
New Interior LED Luminaires	138
New Exterior LED Luminaires	152
High Efficient Electronic Instant Start LED Drivers	2804
TLED Linear LED Lamps 2', 3', & 4' Lengths	6578
Linear Reflector Kits (2x2, 2x4, 8' Industrial Strip)	514
Screw-in LED Lamps (A19, BR30, PAR38, MR16, Chip On Board)	482

Baseline Lighting Consumption and Proposed Savings

Building	Total kWh Savings	Total kW Savings	Existing Ltg kWh	Proposed Ltg kWh	Existing Ltg kW	Proposed Ltg kW	Addl. Clg. Sav. kWh	Addl. Clg. Sav. kW	Addl. Ctl. Sav. kWh
MELLOR BUILDING	32,534	10.4	52,739	22,358	23.0	10.9	2,153	0.8	2,970
KENNETH W. SCHULER CENTER	28,996	8.6	66,106	39,033	21.8	12.7	1,922	0.6	1,346
SCHEWALM STUDENT CENTER	3,924	1.1	7,063	3,346	2.3	1.0	206	0.1	0
HARTZELL BUILDING	16,851	5.6	23,180	7,577	10.6	3.9	1,248	0.4	950
JONES DINING HALL	17,475	5.3	31,687	15,507	12.0	5.7	1,294	0.4	0
MAINTENANCE FACILITIES BUILDING	7,369	2.6	9,763	2,782	6.1	1.8	389	0.1	415
TOM HENCE BUILDING - COLLEGE STORE	5,349	1.8	7,103	2,150	3.4	1.2	396	0.1	362
MULTIPURPOSE ACTIVITY CENTER	140,100	38.2	191,802	61,606	61.9	22.6	9,904	2.9	9,298
WOOLWORTH BUILDING	25,653	9.1	39,209	15,456	19.1	7.5	1,900	0.7	467
SNYDER BUILDING	39,021	14.5	68,095	31,965	33.9	16.7	2,890	1.1	1,338
LEONARD BUILDING	26,913	10.2	48,493	23,573	22.0	10.7	1,994	0.8	94
KREIDER BUILDING	43,290	14.1	58,651	18,466	25.8	9.7	3,105	1.2	4,164
BRENNER HALL	10,762	2.0	18,267	7,906	4.8	2.0	401	0.1	168
BOURNE HALL	7,940	1.7	14,705	7,351	4.5	2.4	586	0.1	0
METZGER HALL	7,940	1.7	14,705	7,351	4.5	2.4	586	0.1	0
ARMSTRONG HALL	22,362	5.9	39,550	18,832	13.6	5.8	1,645	0.5	590
HERRINGTON HALL	22,362	5.9	39,550	18,832	13.6	5.8	1,645	0.5	590
EXTERIOR LIGHTING	138,860	30.6	176,171	37,311	40.3	8.5	0	0.0	0
Total	**597,701**	**178**	**906,839**	**341,403**	**323.4**	**131.4**	**32,265**	**10.7**	**22,751**

Note: Total lighting kW savings have been reduced by a diversity factor of 85% applied to interior lighting.

Due to the expedited nature of the initial lighting audit and the time available to complete take offs from the lighting schedules provided by bulletin, we chose to compile the initial lighting audit by fixture groups, by facility. The lighting audit line by line including pre & post fixture codes, descriptions, wattage, hours and diversity can be found in the attachments. In general, savings are calculated as:

- kWh Savings = (existing fixture kW * burn hours) – (post fixture kW * burn hours)
- kW Savings = (existing fixture kW) – (post fixture kW), then reduced by a diversity factor to account for the fact that not all fixtures are 100% on at any given time.
- Additional savings are also applied for cooling and heating penalties as well as lighting controls.

The following table correlates the burn hours provided in the bulletin with the hour groups used in the line by line audit. TEN is confident this approach has yielded savings within the 95% accuracy required of the RFP.

Hour Groups	Hour Group Description	Hours
CLASS	CLASSROOM / COMPUTER LAB / LECTURE HALL	2200
CORR	CORRIDOR / HALLWAYS / COMMON SPACES	2520
DORM	DORMITORY / RESIDENTIAL HOUSING	1440
EMERG	24 HOUR / 7 DAYS A WEEK	8760
EXTERIOR	PARKING LOT / EXTERIOR BUILDING FAÇADE / CAMPUS WALKWAY	4380
GYM	GYMNASIUM / ATHLETIC AREA / FITNESS	3640
CUSTODIAL	CUSTODIAL / JANITORIAL	720
KITCHEN	MAIN KITCHEN / DINING HALL / SERVING	3640
LIBRARY	LIBRARY / CLASSROOM	3640
LOCKER	LOCKER ROOM / TEAM ROOM	1800
OFFICE	OFFICE AREA / ADMINSTRATION	2080
PRIV RESTROOM	UNISEX RESTROOM / SINGLE OCCUPANT	1040
RESTROOM	COMMON RESTROOM / PUBLIC USE	2160
STORAGE - LOW USE	STORAGE / CLOSET / LIMITED ACCESS	540
STORAGE - HIGH USE	STORAGE / CLOSET / LIMITED ACCESS	1040

Measurement and Verification

Lighting upgrade measurement and verification is anticipated to be completed through a pre and post measurement of fixture kW as it relates to a meaningful sampling of typical fixture types and retrofit locations and their associated burn hour groups.

ECM 4.2 Distribution System Transformers and Battery Storage

Existing Conditions

The existing distribution system was evaluated and many opportunities for savings and improvement were found in campus transformer efficiency losses in the 12,470V circuit and the building service entrance equipment at the Mellor Building.

Proposed Solution

Each building is fed from the 12,470V distribution loop. A stepdown transformer reduces the voltage to 208Y/120V 3 Phase that if fed to all of the buildings (8 stepdown transformers in total). Seven of those transformers are old and inefficient. Based on TEN's end-use analysis they appear to be over-sized, which can waste significant energy. All of these transformers with the exception of the new one installed by the dorms, will be replaced. During the implementation of this energy project it is recommended that the sub-metering of the electricity be the first ECM installed. That sub-meter data will be able to verify the conclusion that these transformers are over-sized. In the drawing below the yellow boxes are the 12.45kV distribution transformers. The red number in the transformer boxes are the transformer ratings. The purple numbers on the diagram are the estimated kVA. These will be updated based on some sub-meter data but it is striking that the purple numbers are far smaller than the red numbers.

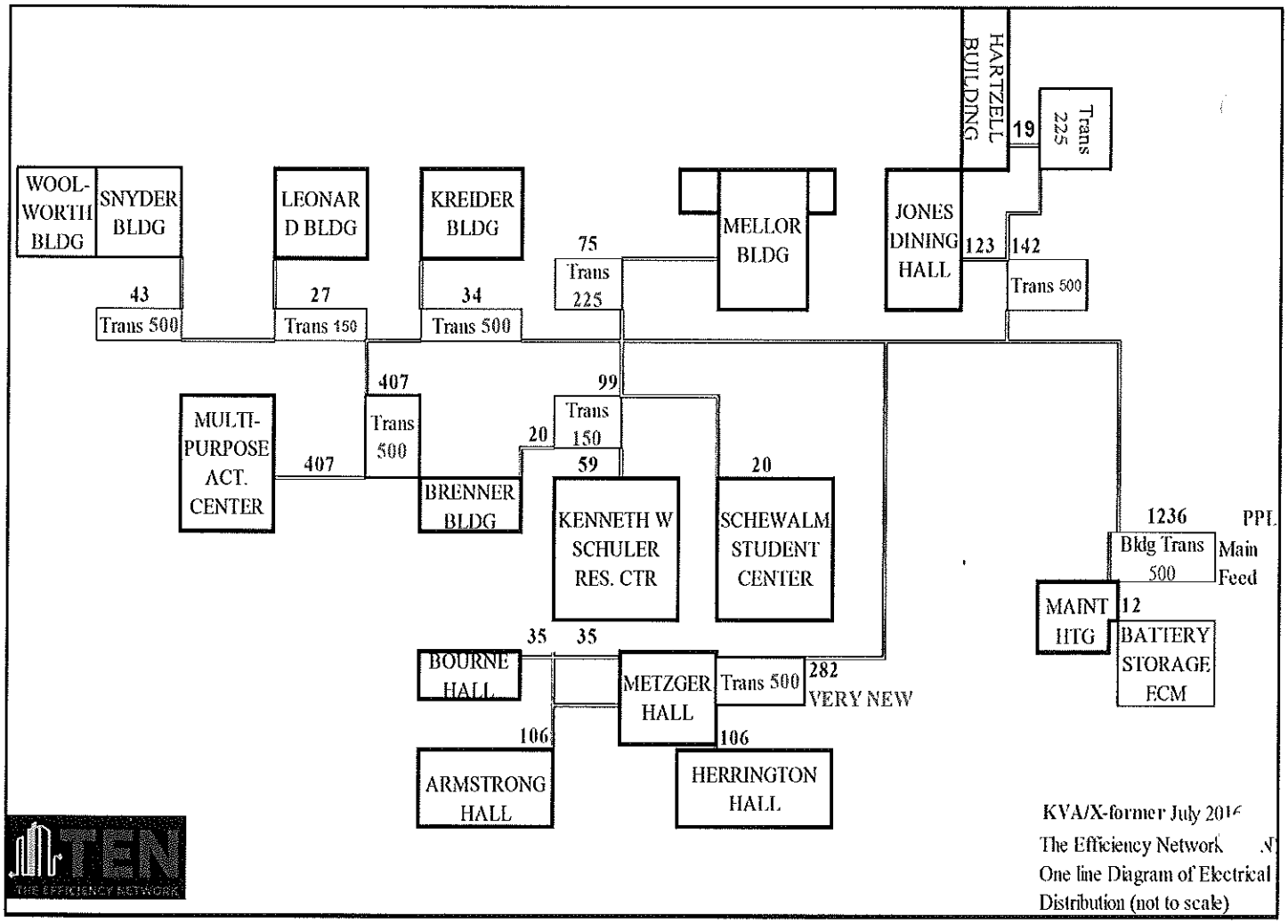

Additionally, the main campus feed transformers will be replaced. This upgraded distribution system will be used to allow the installation of a 2MW battery storage system containerized system on the maintenance pad behind the Maintenance Building. The batteries will be used to participate in the frequency regulation market with PJM. A diagram of this sort of in-front of the meter system is shown below.

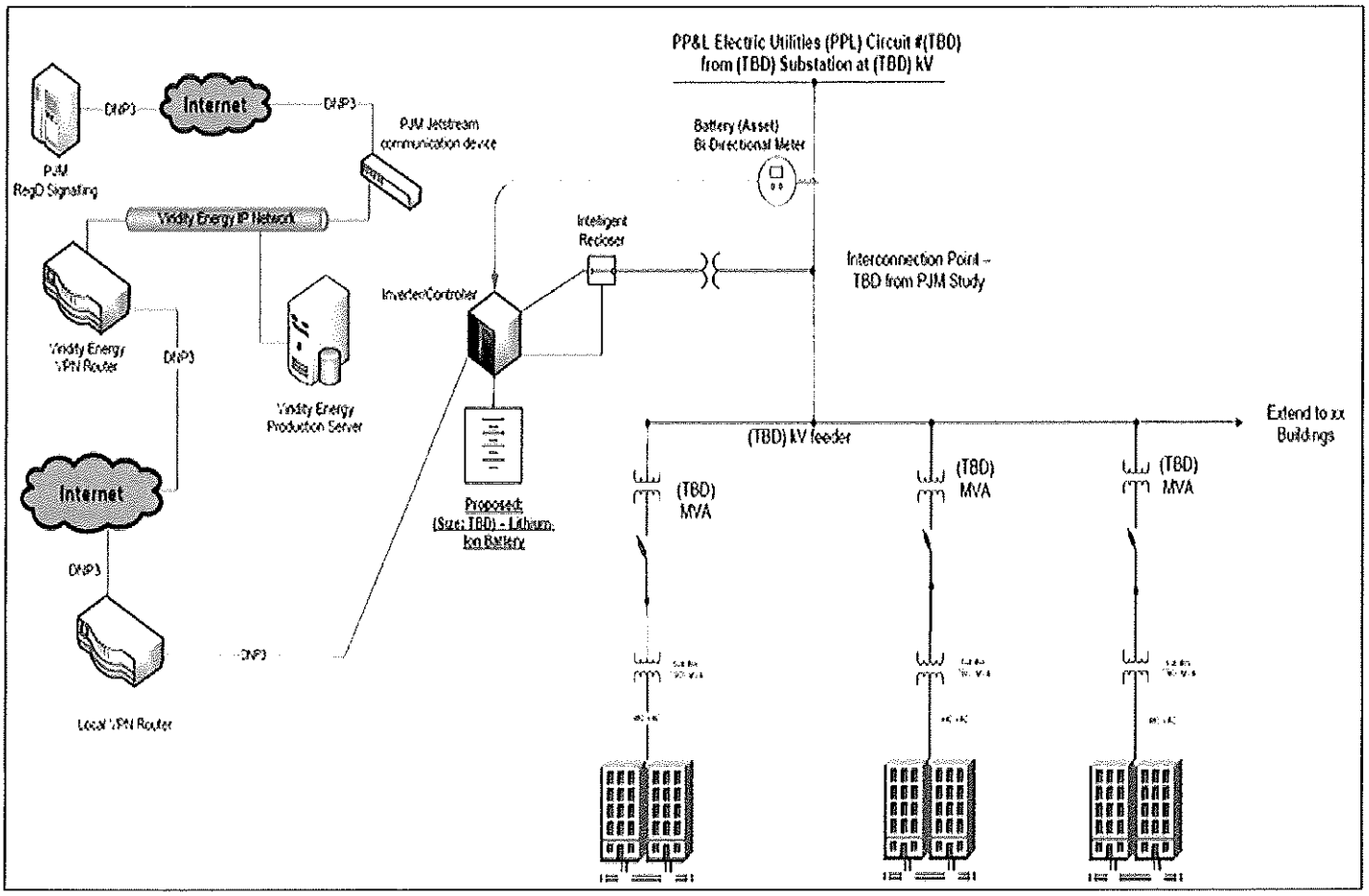

The very old distribution panel in the basement of the Mellor Building will also be replaced as part of this distribution system upgrade.

Measurement and Verification

Distribution system transformers and battery storage M&V is anticipated to be completed using IPMVP Option C utilizing a survey of the existing transformers with manufacturer's help and end-use estimate as pre variables and actual transformer efficiencies and transformer loading based on sub-meters as well as detailed instrumentation on battery usage and monthly payments from PJM as post variables.

ECM 4.3 - Sub-Meter Installation

Existing Conditions

Currently these is no sub-metering of energy at the individual buildings. The electricity and steam/natural gas for heating are metered at the Maintenance / Boiler Building. There are some sub-meters for a few small natural gas accounts.

Proposed Solution

The intent of this ECM is to provide Thaddeus Stevens sub-metering of each building available on site. Meters will be installed at each building to measure electricity and steam at the building level. This data will then be sent to a central location of trouble shooting or cost allocation. All metering points will be displayed back to the Metasys Single Seat User Interface outlined in ECM 2.1 above.

Measurement and Verification
Although sub-meters will be used to assist with the M&V of other ECMs, they do not currently carry their own savings.

Detailed Energy Audit Pricing Methodology
TEN's standard approach to business is to provide transparent pricing. We will share with the customer all subcontractor and supplier quotes and then apply the agreed upon Management Labor fees from the Project Specific RFP Cost Submission Form. We apply this approach when pricing the Energy Audit as demonstrated on the next page in addition to the project as a whole. In this manner we openly demonstrate our approach to delivering best value to our customers.

Again, TEN performs the auditing, design engineering, energy calculations, project development, construction management (including site project management), commissioning and measurement and verification services in-house. We know that many Energy Services Companies have started to subcontract out much of the engineering, using in-house engineers just to review the consultants' work. This would minimize their engineering costs shown in the Management Labor fees, but would increase their hard costs.

Companies that self-perform some of the actual installation work will also have an advantage in minimizing their Management Labor fees, since most of their engineering, project management and/or mark-up could be buried in the hard costs. One might argue that those who self-perform some of the work can provide a lower cost structure to their customer, since that work may not be marked up as much. We would argue that even though that could be the case, we generally find that our competitive process drives the hard costs down, enabling us to provide a lower overall cost, while giving each customer more control in selecting manufacturers, contractors, M/WBE participation, etc. The key point to remember is that when companies know they are competing, the prices come down.

a. Explanation in terms of dollars not percentages

Based on the size of the facilities in question, the complexity of the building systems and goals and objectives (number and type of ECMs), TEN has budgeted the following time and the resources needed to complete the tasks identified in the RFP and AFQ for the Energy Audit Report. Following is a summary of these costs which anticipate a 45-day turnaround. Should the PJM battery storage interconnection study and final PJM notification require additional time, TEN will deliver the Energy Audit Report within the 45-day timeframe so that TSCT / DGS review can begin in advance of the final PJM notification.

Task Name	Hours	Function	Billing Rate	Cost
Familiarize with blueprints, commissioning reports, etc.	12	Sr. Energy Engineer	$ 138	$ 1,655
Lighting Survey	80	Jr. Energy Engineer	$ 111	$ 8,912
Mechanical and electrical survey	32	Sr. Energy Engineer	$ 138	$ 4,413
Review and analyze utility bills	12	Sr. Energy Engineer	$ 138	$ 1,655
List the ECMs - Lighting and Lighting Controls	20	Jr. Energy Engineer	$ 111	$ 2,228
List the ECMs - Thermal	12	Sr. Energy Engineer	$ 138	$ 1,655
Construct spreadsheet of intital opportunities	24	Sr. Energy Engineer	$ 138	$ 3,310
Run lighting through lighting database, produce costed outputs	16	Jr. Energy Engineer	$ 111	$ 1,782
Scopes of work to contractors / vendors	24	Sr. Energy Engineer	$ 138	$ 3,310
Contractor walk-through	24	Sr. Construction Mgr.	$ 122	$ 2,928
Rebate analysis	16	Jr. Energy Engineer	$ 111	$ 1,782
Produce ECM write-ups and supporting tables - lighting	12	Jr. Energy Engineer	$ 111	$ 1,337
Produce ECM write-ups and supporting tables - Thermal incl. financials	20	Sr. Energy Engineer	$ 138	$ 2,758
Audit Report	30	Sr. Energy Engineer	$ 138	$ 4,138
Edit remainder of report & QC	36	Admin Support	$ 69	$ 2,483
M&V Plan	32	M&V Specialist	$ 117	$ 3,734
Battery Storage - Retained Professionsal (Interconnection Study)	120	Developer	$ 138	$ 16,550
Battery Storage - Retained Professionsal (Interconnection Study)	50	Director	$ 159	$ 7,957
Assemble sample product documents	12	Jr. Energy Engineer	$ 111	$ 1,337
Management Review	35	Sr. Level Manager	$ 159	$ 5,570

Energy Audit Price:	**$ 79,493**

b. Discussion of how the methodology will comply with the format in the Energy Audit Report template TEN has all the expertise in-house to perform the Energy Audit. Our senior energy engineers average twenty years in the energy engineering field and have designed many successful energy saving projects. TEN also has internal lighting and water conservation design expertise. Having the best design and construction talent in-house enables us to provide the most financially attractive designs, competitive secured pricing for those designs to yield the lowest responsible hard costs before reasonable management fees are applied to successfully implement the project. This approach equates to the best value for the Agencies.

As outlined in Section D and in accordance with Energy Audit Report template in Appendix E, section 1-25 of the AFQ and this RFP, TEN will perform the energy audit with in-house engineers, including but not limited to:

- Analyze utility bills and establish and baseline
- Physically audit and inspect mechanical and electrical systems to determine, sizing, loads, efficiency, operating conditions and hours of operations
- Analyze energy consumption for major equipment and system
- Develop list of ECMs to review with Agency
- Develop scopes for works
- Perform energy calculations, methodology, assumptions
- Estimate incentives and rebates
- Estimate environmental costs or benefit (emissions reduction)
- Develop and commissioning plan and a M&V plan

c. Reasonableness and transparency of the pricing methodology
As shown in the example above and as it applies the project as a whole, TEN will develop the Thaddeus Stevens College of Technology project using transparent pricing to ensure best value.

Guaranteed M&V Pricing Methodology

1. Detailed explanation of Guaranteed Savings Measurement and Verification pricing methodology

a. Explanation in terms of dollars, not percentage

TEN proposes to initially meet with DGS and TSCT representatives to discuss the cost benefit analysis of each measurement and verification option for each measure and then determine the M&V plan. This discussion will include how the measurements will be taken and for how long (option B) or how the utility information will be obtained (option C) to determine the tasks required and the hours needed to perform the agreed upon plan. TEN then will review the plan, scope of work, the personnel that will be performing the work. TEN's team, including Rick Ellison, Greg Lok, and Nikhil Singh have extensive expertise in developing and performing measurement and verification plans; however, we, in conjunction with DGS and TSCT, determine what tasks TEN will perform and the scope. We believe that this approach will not only provide DGS and TSCT some control in arriving at M&V cost, but also will reflect the actual cost to perform the work vs. just a percentage of hard costs, since the cost of the project does not always correlate to the complexity and cost to measure and verify the results. At this juncture, we have estimated the annual M&V cost as follows. This is in line with the Pricing Submission Form and provides for some flexibility in the final M&V plan established with DGS and TSCT.

b. Methodology Compliance with the DGS Design Manual, General Conditions and the IPMVP.

TEN follows the International Performance Measurement & Verification Protocol (IPMVP), the industry standard for development and implementation of M&V plans in energy savings projects. IPMVP provides four Options for determining savings (A, B, C and D). We will additionally review each ECM and M&V approach to ensure compliance with DGS's Design Manual and General Conditions prior to the final M&V selections and cost benefit analysis identified above. We provided a detailed example of the various IPMVP options in our AFQ submission which has been omitted here to save space.

c. Reasonableness and Transparency of the Pricing Methodology

TEN will outline the tasks and time to complete tasks for the final selection of the M&V option for each ECM and apply our disclosed hourly rates, and then review with DGS. TEN will utilize their automation tools when possible to minimize time and cost of M&V services, if approved by DGS.

ECM	IPMVP Option	Annual M&V Cost
Window AC Conversion	B	$ 200
Window Systems Repair / Replacement	D	$ 200
Temperature Control Upgrades (EMS)	D	$ 2,500
Steam Traps & Insulation	A	$ 500
Exhaust Hood Control	D	$ 200
Exhaust Fan Management	A	$ 200
Plumbing Measures	A	$ 500
LED Lighting Upgrade	A	$ 3,700
Distribution Transformers & Battery Storage	C	$ 22,000
Submeters	A	
	Total:	**$ 30,000**

TEN

DGS SMALL GESA-2 RFP

THADDUES STEVENS COLLEGE

ECM/COST SUBMISSION
SAVINGS CALCULATIONS

Energy Savings Methodology

The first step in the energy analysis performed at Thaddeus Stevens was performing an end use analysis of where the energy is currently used. This was necessary because the electricity used by the buildings and the natural gas used to generate steam are measured by a single master meter. There is no record of what electricity and steam each building currently uses.

TEN took the electricity and natural gas generating steam recorded in the utility bills (shown in the table below) and divided them amongst the buildings based on building usage and size. The EUI for the steam and electricity used by the campus as a whole was calculated to be 88 kBtu/sqft.

Energy Source	Cost	Energy	
Electricity	$302,049.28	4,039,800	kWh
Natural Gas (Steam)	$161,985.75	22,846	MMBtu
Whole Campus Energy Usage Index (EUI)		**88 kBtu/sqft**	

Not only was the energy divided between the buildings, but the energy consumed in the distribution systems also was investigated. The electricity consumed by the distribution transformers was estimated in the end use analysis. The natural gas lost in the boiler generating the steam and the system distributing the steam was also estimated in the end use analysis. This is an important step to ensure that the energy usage and savings for the buildings are not over-stated. Only a percentage of the energy measured at the master meters is actually consumed within the building.

End Use Category	Energy	Cost
Building Electric Usage =	3,514,626	$262,783
Distribution Transformer Loss =	525,174	$39,266
Building Steam Usage =	16,677	$118,234
Distribution Loss =	2,285	$16,197
Boiler Loss =	3,884	$27,534
Building Energy Usage Index (EUI)	**73 kBtu/sqft**	

After the distribution losses are taken into account, the building EUI of 73 kBtu/sqft is significantly lower the initial apparent EUI of 88 kBtu/sqft suggested by the utility bills alone.

The end use analysis broken down by building is as follows:

Building name	Building Square Footage	Transformer Total kWh	Transformer Total $ Elect	Building Total kWh	Building Total $ Elect	Input Total MMBtu	Input Total $	Building Total MMBtu	Building Total $ Steam	Distribution Losses
MELLOR BUILDING	37,780	38,555	$2,863	258,022	$19,292	1,698	$12,036	1,276	$9,048	$1,204
KENNETH W SCHULER RESOURCE CENTER	49,128	29,490	$2,205	197,354	$14,756	3,509	$24,877	2,562	$18,160	$2,488
KREIDER BLDG	34,548	16,123	$1,206	107,903	$8,068	2,468	$17,494	1,801	$12,771	$1,749
SCHEWALM STUDENT CENTER	7,338	9,777	$731	65,429	$4,892	51	$361			$36
BRENNER HALL	10,488	10,302	$770	68,943	$5,155	471	$3,341	344	$2,439	$334
MULTI-PURPOSE ACTIVITY CENTER	50,020	204,718	$15,306	1,370,033	$102,435	1,040	$7,374	759	$5,383	$737
LEONARD BLDG	32,978	12,803	$957	85,680	$6,406	2,340	$16,588	1,708	$12,110	$1,659
BOURNE HALL	8,385	17,731	$1,326	118,658	$8,872	595	$4,218	434	$3,079	$422
METZGER HALL	8,385	17,731	$1,326	118,658	$8,872	595	$4,218	434	$3,079	$422
WOOLWORTH BLDG	16,519	8,456	$632	56,590	$4,231	1,180	$8,364	861	$6,106	$836
MAINTENANCE HEATING	16,786	5,234	$391	35,029	$2,619	51	$363	37	$265	$36
HERRINGTON HALL	25,176	53,236	$3,980	356,271	$26,638	1,786	$12,664	1,304	$9,245	$1,266
ARMSTRONG HALL	25,176	53,236	$3,980	356,271	$26,638	1,786	$12,664	1,304	$9,245	$1,266
JONES DINING HALL	22,728	22,324	$1,669	149,402	$11,171	2,102	$14,900	1,534	$10,877	$1,490
HARTZELL BUILDING	10,800	8,634	$646	57,778	$4,320	485	$3,441	354	$2,512	$344
SNYDER BUILDING	37,647	16,826	$1,258	112,606	$8,419	**2,689**	$19,063	1,963	$13,916	$1,906
	393,882	525,174	$39,266	3,514,626	$262,783	22,846	$161,966	16,677	$118,234	$16,197
							Boiler Efficiency = 83%			

Ten then determined what portion of the energy used within each building and by the utility system could be saved by the "Core Energy Conservation Measures" listed in the RFP. The savings for each ECM is listed separately.

ECM 1 – Facility Thermal Building Systems
Savings Calculations

ECM 1.1 - Replace window mounted air conditioning units with energy efficient split systems. Buildings include Mellor, Kreider, Leonard, Woolworth, Snyder, and other applicable locations.

TEN proposes to remove the window AC units in the Mellor Building. Thirty-eight new interior Samsung VRF units will be installed to serve the Mellor Building. The new air conditioning units will save cooling energy because of the improved efficiency of the units. Additionally, the installation of the units will save heating and cooling energy by allowing the windows to be closed properly which will reduce infiltration of unconditioned air when the window AC units are removed.

Similarly, the removal of the window AC units at Kreider and Woolworth Buildings will save cooling energy because of the improved efficiency of the units. Additionally, the installation of the units will save heating and cooling energy by allowing the windows to be closed properly which will reduce infiltration of unconditioned air when the window AC units are removed.

The cooling savings are shown in kWh for each building due to equipment efficiency and infiltration reduction are shown in blue in the table below. The heating savings in MBTU for each building due to infiltration reduction are shown in pink in the table below.

BUILDING	kWh Saved	MBTU Saved (heat)
MELLOR	3,409.3	7,889.5
KREIDER	1,167.0	2,906.7
WOOLWORTH	390.5	1,038.1

The savings calculations are shown on the next two pages.

A/C Tons	BUILDING	# Units	LSF each	LSF total	CFH /LF
66	MELLOR	38	3	114	1710
22.5	KREIDER	14	3	42	630
7.5	WOOLWORTH	5	3	15	225

Infiltration Calculation		
k =	2	1/64" crack
Velocity Factor	0.04	Avg speed 8.27 mph
Infiltration Rate	0.25	cfm/ linear foot
Infiltration Rate	15	cfhr/ linear foot

Weather Bin Analysis of Cooling and Infiltration Savings					Cubic Feet / Hr/ Linear Foot		
					1710	630	225
Mid-pts	DB (F)	Hrs	WS (mph)	Delta T	MELLOR Infil MBTU	KREIDER Infil MBTU	WOOLWORTH Infil MBTU
97.5	95 to 100	8	16.8	22.5	14.8	5.4	1.9
92.5	90 to 95	20	10	17.5	36.9	13.6	4.9
87.5	85 to 90	128	9	12.5	236.4	87.1	31.1
82.5	80 to 85	451	8.7	7.5	832.9	306.9	109.6
77.5	75 to 80	508	7.4	2.5	938.2	345.6	123.4
75 70	Dead Band				2,059	758.6	270.9

	Tons			=MBTU Infiltration X .0833 kWh /MBTU +0.15 kWh/ton cooling		
	66	22.5	7.5			
A/C Load	MELLOR Cooling Tons X Hours	KREIDER Cooling Tons X Hours	WOOLWORTH Cooling Tons X Hours	MELLOR Total kWh Reduction	KREIDER Total kWh Reduction	WOOLWORTH Total kWh Reduction
95%	501.6	171.0	57.0	76.5	26.1	8.7
75%	990.0	337.5	112.5	151.6	51.8	17.3
55%	4,646.4	1,584.0	528.0	716.7	244.9	81.8
35%	10,418.1	3,551.6	1,183.9	1,632.1	558.3	186.7
15%	5,029.2	1,714.5	571.5	832.5	286.0	96.0
	21,585.3	7,358.6	2,452.9	**3,409.3**	1,167.0	390.5

Weather Bin Analysis of Heating and Infiltration Savings					Cubic Feet / Hr/ Linear Foot		
					1710	630	225
Mid-pts	DB (F)	Hrs	WS (mph)	Delta T	MELLOR Infil MBTU	KREIDER Infil MBTU	WOOLWORTH Infil MBTU
75 70	Dead Band						
67.5	65 to 70	545	6.6	2.5	1,006.5	370.8	132.4
62.5	60 to 65	595	7.2	7.5	1,098.8	404.8	144.6
57.5	55 to 60	408	7.4	12.5	753.5	277.6	99.1
52.5	50 to 55	376	7.8	17.5	694.4	255.8	91.4
47.5	45 to 50	317	8.8	22.5	585.4	215.7	77.0
42.5	40 to 45	386	9.4	27.5	712.9	262.6	93.8
37.5	35 to 40	618	8.4	32.5	1,141.3	420.5	150.2
32.5	30 to 35	439	8.4	37.5	810.7	298.7	106.7
27.5	25 to 30	229	8.9	42.5	422.9	155.8	55.6
22.5	20 to 25	191	13.1	47.5	352.7	130.0	46.4
17.5	15 to 20	138	10.6	52.5	254.9	93.9	33.5
12.5	10 to 15	29	8.6	57.5	53.6	19.7	7.0
7.5	5 to 10	1	9.2	62.5	1.8	0.7	0.2
		weighted avg =	8.27		7,889.5	2,906.7	1,038.1

ECM 1.2 - Facility Thermal Building Systems: Repair/replace windows in Jones Dining Hall and Armstrong Hall.

TEN calculated the savings from replacing the old rusted steel windows in Jones Dining Hall and repairing the windows in Armstrong Hall creating a calibrated model of the existing buildings using the Trane Trace 700 program. These models were calibrated to match the end use analysis and then the windows in the model were changed to simulate the projected energy usage after the windows were changed. The results are listed below and the Trane Trace reports on the following pages.

1 Jones Dining Hall

	Window Area	U-value	SHGC
Existing	1,836	1.02	0.724
Proposed	1,836	0.32	0.31

	Alt-1 JONES DINING Existing		Alt-2 JONES DINING Proposed	
	Energy 10^6 Btu/yr	Cost/yr $/yr	Energy 10^6 Btu/yr	Cost/yr $/yr
Electricity	6,000.1	131,447	5,857.7	128,327
Purchased Steam	5,928.8	42,029	5,197.8	36,847
Total	11,929	173,476	11,056	165,174

2 Armstong Hall

	Window Area	U-value	SHGC
Existing	719	1	0.93
Proposed	719	0.45	0.46

44 71 1495 0.08016

	Alt-1 ARMSTRONG HALL EXISTING		Alt-2 ARMSTRONG HALL Eroposed	
	Energy 10^6 Btu/yr	Cost/yr $/yr	Energy 10^6 Btu/yr	Cost/yr $/yr
Electricity	731.1	16,017	722.0	15,817
Purchased Steam	516.8	3,664	456.1	3,234
Total	1,248	19,681	1,178	19,051

Energy Cost Budget / PRM Summary

By The Efficiency Network (TEN)

Project Name: Thaddeus Stevens	Date: June 30, 2018
City: Lancaster, PA	Weather Data: Philadelphia, Pennsylvania

Note: The percentage displayed for the "Proposed/ Base %" column of the base case is actually the percentage of the total energy consumption.

* Denotes the base alternative for the ECB study.

		* Alt-1 JONES DINING Existing			Alt-2 JONES DINING Proposed		
		Energy 10^6 Btu/yr	Proposed / Base %	Peak kBtuh	Energy 10^6 Btu/yr	Proposed / Base %	Peak kBtuh
Lighting - Conditioned	Electricity	572.6	5	99	572.6	100	99
Space Heating	Electricity	2.5	0	0	2.2	88	0
	Purchased Steam	5,928.8	50	1,635	5,197.8	88	1,435
Space Cooling	Electricity	2,672.9	22	853	2,512.7	94	815
Pumps	Electricity	176.7	1	30	168.0	95	28
Heat Rejection	Electricity	118.0	1	57	111.7	95	54
Fans - Conditioned	Electricity	2,251.9	19	369	2,079.5	92	345
Receptacles - Conditioned	Electricity	205.5	2	37	411.0	200	73
Total Building Consumption		11,928.9			11,055.5		

		* Alt-1 JONES DINING Existing	Alt-2 JONES DINING Proposed
Total	Number of hours heating load not met	0	0
	Number of hours cooling load not met	0	0

	* Alt-1 JONES DINING Existing		Alt-2 JONES DINING Proposed	
	Energy 10^6 Btu/yr	Cost/yr $/yr	Energy 10^6 Btu/yr	Cost/yr $/yr
Electricity	6,000.1	131,447	5,857.7	128,327
Purchased Steam	5,928.8	42,029	5,197.8	36,847
Total	11,929	173,476	11,056	165,174

Energy Cost Budget / PRM Summary

By The Efficiency Network (TEN)

Project Name: Windows Repair	Date: July 04, 2016
City: Lancaster, PA	Weather Data: Philadelphia NE TM3

Note: The percentage displayed for the "Proposed/ Base %" column of the base case is actually the percentage of the total energy consumption.

* Denotes the base alternative for the ECB study.

		* Alt-1 Armstrong Baseline			Alt-2 Armstrong Window Repair		
		Energy 10^6 Btu/yr	Proposed / Base %	Peak kBtuh	Energy 10^6 Btu/yr	Proposed / Base %	Peak kBtuh
Lighting - Conditioned	Electricity	98.6	8	45	98.6	100	45
Space Heating	Electricity	1.2	0	0	1.1	89	0
	Purchased Steam	516.8	41	657	456.1	88	563
Space Cooling	Electricity	262.0	21	295	261.2	100	286
Pumps	Electricity	93.7	8	15	87.8	94	14
Heat Rejection	Electricity	13.8	1	20	13.8	98	19
Fans - Conditioned	Electricity	113.6	9	29	111.4	98	28
Receptacles - Conditioned	Electricity	141.8	11	57	141.8	100	57
Stand-alone Base Utilities	Electricity	9.5	1	3	9.5	100	3
Total Building Consumption		1,248.0			1,178.1		

		* Alt-1 Armstrong Baseline	Alt-2 Armstrong Window Repair
Total	Number of hours heating load not met	0	0
	Number of hours cooling load not met	0	0

	* Alt-1 Armstrong Baseline		Alt-2 Armstrong Window Repair	
	Energy 10^6 Btu/yr	Cost/yr $/yr	Energy 10^6 Btu/yr	Cost/yr $/yr
Electricity	731.1	16,017	722.6	15,817
Purchased Steam	516.8	3,664	456.1	3,234
Total	1,248	19,681	1,178	19,051

ECM 2 – HVAC Measures
Savings Calculations

ECM 2.1 – Temperature Control Upgrades (EMS - Campus Single Seat User Interface)

Presently the campus has a mix of different DDC systems, unitary systems, VRF systems and window AC systems for cooling and separate steam systems for heating. There is no single interface that can monitor or control these diverse systems. TEN will install a fully mobile, device compliant interface for use with desktop, laptop, smart phone, and smart pad devices. The interface will have a floor plan graphical user interface as well as long term storage of trend and alarm histories via a desktop server. The installation of this interface helps the user monitor the operation of the buildings but does not save energy just by being installed.

This central control will be used to optimize the operation of all the buildings and add time of day, setpoint monitoring, chilled water temperature and discharge air temperature to the applicable buildings. (i.e. Mellor does not have chillers so chilled water reset would not apply to it). Many of the buildings with existing DDCs where found to have opportunities to save energy through re-commissioning that will be performed during the installation of this ECM.

Base there are no individual energy meters serving the building the savings calculations for this ECM are based on the end use analysis performed on the whole campus. First the various energy use categories outside of the buildings such as and transformer losses, steam distribution losses and boiler efficiency were subtracted from the baseline. Then individual categories inside the buildings such as lighting, domestic hot water and internal equipment were subtracted from the building allocations. The energy that remained was the portion of the energy used by the heating and cooling systems. Each building was analyzed for control savings opportunities. The savings for specific savings like the control of building exhausts were not considered as part of these savings.

The initial end use analysis TEN performed for the whole campus is shown on the following page. The allocation of HVAC systems used to calculate the control savings for each building along with the savings amounts are shown on the next page after that.

TEN recommends that the electric sub meters be installed as early as possible so that end use analysis can be improved to make that baseline and proposed energy projections more accurate.

The initial end use analysis broken down by building is as follows:

Building name	Building Square Footage	Transformer Total kWh	Transformer Total $ Elect	Building Total kWh	Building Total $ Elect	Input Total MMBtu	Input Total $	Building Total MMBtu	Building Total $ Steam	Distribution Losses
MELLOR BUILDING	37,780	38,555	$2,883	258,022	$19,292	1,698	$12,036	1,276	$9,048	$1,204
KENNETH W SCHULER RESOURCE CENTER	49,128	29,490	$2,205	197,354	$14,756	3,509	$24,877	2,562	$18,160	$2,488
KREIDER BLDG	34,548	16,123	$1,206	107,903	$8,068	2,468	$17,494	1,801	$12,771	$1,749
SCHEWALM STUDENT CENTER	7,338	9,777	$731	65,429	$4,892	51	$361			$36
BRENNER HALL	10,488	10,302	$770	68,943	$5,155	471	$3,341	344	$2,439	$334
MULTI-PURPOSE ACTIVITY CENTER	50,020	204,718	$15,306	1,370,033	$102,435	1,040	$7,374	759	$5,383	$737
LEONARD BLDG	32,978	12,803	$957	85,680	$6,406	2,340	$16,588	1,708	$12,110	$1,659
BOURNE HALL	8,385	17,731	$1,326	118,658	$8,872	595	$4,218	434	$3,079	$422
METZGER HALL	8,385	17,731	$1,326	118,658	$8,872	595	$4,218	434	$3,079	$422
WOOLWORTH BLDG	16,519	8,456	$632	56,590	$4,231	1,180	$8,364	861	$6,106	$836
MAINTENANCE HEATING	16,786	5,234	$391	35,029	$2,619	51	$363	37	$265	$36
HERRINGTON HALL	25,176	53,236	$3,980	356,271	$26,638	1,786	$12,664	1,304	$9,245	$1,266
ARMSTRONG HALL	25,176	53,236	$3,980	356,271	$26,638	1,786	$12,664	1,304	$9,245	$1,266
JONES DINING HALL	22,728	22,324	$1,669	149,402	$11,171	2,102	$14,900	1,534	$10,877	$1,490
HARTZELL BUILDING	10,800	8,634	$646	57,778	$4,320	485	$3,441	354	$2,512	$344
SNYDER BUILDING	37,647	16,826	$1,258	112,606	$8,419	**2,689**	$19,063	1,963	$13,916	$1,906
	393,882	525,174	$39,266	3,514,626	$262,783	22,846	$161,966	16,677	$118,234	$16,197

Boiler Efficiency = 83%

The HVAC control savings by building are as follows:

Building name	Existing HVAC in kWh	Building Savings kWh	Building Total MMBtu	Building Heating Savings MMBtu
MELLOR BUILDING	122,063	30,516	1,276	383
KENNETH W SCHULER RESOURCE CENTER	98,349	1,967	2,562	77
KREIDER BLDG	33,015	8,254	1,801	540
SCHEWALM STUDENT CENTER	51,766	5,177		0
BRENNER HALL	37,867	757	344	10
MULTI-PURPOSE ACTIVITY CENTER	877,002	35,080	759	38
LEONARD BLDG	25,739	515	1,708	512
BOURNE HALL	77,343	1,547	434	13
METZGER HALL	77,343	1,547	434	13
WOOLWORTH BLDG	9,760	2,440	861	258
MAINTENANCE HEATING	15,805	0	37	0
HERRINGTON HALL	235,571	4,711	1,304	39
ARMSTRONG HALL	235,571	4,711	1,304	39
JONES DINING HALL	87,803	21,951	1,534	460
HARTZELL BUILDING	23,958	479	354	11
SNYDER BUILDING	24,633	4,927	1,963	393
Totals	2,033,589	**124,578**	16,677	**2,787**
Building Savings Percentage =		**6.1%**		**16.7%**

The control measures included in each building are listed in the following tables:

ECM Description	Thaddeus Stevens Buildings																
	Alumni	Armstrong	Bourne	Brenner	Herrington	Hartzel	Jones	Kreider	Leonard	LRC	MAC	Maintenanc	Mellor	Metzger	Schwalm	Snyder	Woolworth
2.1- Campus Single Seat User Interface	CORE	CORE	CORE	CORE	CORE	CORE	CORE	CORE	CORE	CORE	CORE	CORE	CORE	CORE	CORE	CORE	CORE
2.1 – HX Controls Upgrade and OA Reset Scheduling		EXISTS	EXISTS	EXISTS	EXISTS	EXISTS	CORE	CORE		EXISTS	EXISTS			EXISTS		CORE	CORE
2.1 – HVAC Monitoring & Scheduling of Heating & Cooling		EXISTS	EXISTS	EXISTS	EXISTS	EXISTS	CORE	CORE	CORE	EXISTS	EXISTS		CORE	EXISTS	CORE	CORE	CORE
2.1 -Add Steam control Valve Building Shutdown									CORE				CORE			EXISTS	EXISTS
2.1 - DDC Re-Commissioning		CORE	CORE	CORE	CORE	CORE				CORE	CORE			CORE			

CORE - Means included in the core ECMs

EXISTS - Means already present

ECM 2.2 – Steam Trap Repair/Replacement (and Bare Line Insulation)

TEN proposes to conduct a steam trap survey to evaluate the overall condition of the steam traps in this facility. Apart from the properly working traps, the survey also identifies the condition in which the steam traps are failed. Conditions such as failed open, failed closed, blocked, or leaking are normally candidates for replacement.

Not all piping specialties such as pressure reducing valves or pumps were originally designed with insulation. This is typically the case since these items might require attention from time to time. Standard insulation was applied as a permanent system to the piping, and so it was typically not applied to those items which would require removal of the insulation.

Over time, certain amounts of pipe or other items have their insulation removed or it was degraded to a point where their effectiveness was diminished markedly. When those situations occurred, heat loss from the pipe was carried into the space, thus wasting energy. It also causes a safety hazard for those working in the spaces & provide for higher than required temperatures in the mechanical spaces, often making them uncomfortable.

TEN estimated the number of failed traps based on experience at other campus facilities. The insulation savings were based on a survey of the steam distribution system and the entry to the buildings.

The steam tap savings are estimated as follows:

Total Estimated Annual Steam Loss	1,022	MMBtu/yr
Total Annual Energy Savings	1,231	MMBtu/yr
Total Annual Energy Cost Savings	$8,726	per yr

The bare steam line savings are estimated as follows:

	NON-INSULATED		INSULATED		SAVINGS	
Linear Footage (ft)	Total Bare Fuel Cost per Year	Total Bare KBtu Heat Loss per Year	Total Insulated Fuel Cost per Year	Total Insulated KBtu Heat Loss per Year	Total Insulated Cost Savings per Year	Total Insulated KBtu Savings per Year
132.8	$ 6,479.31	758,496	$ 430.69	50,411	$ 6,048.62	708,085

ECM 2.3 – Exhaust hood demand controlled ventilation in Jones Dining Hall

Presently the cooking hoods and the make-up air handling unit (AHU) serving them all work in a constant volume mode which moves the maximum amount of air whether needed or not wasting energy.

TEN will install a usage based control system from Melink on both cooking hoods. The Melink system determines the need of the cooking hood based on the heat and/or smoke being given off by the cooking equipment. The speed of the exhaust fan and the make-up AHU will vary based on the usage of the kitchen cooking equipment. This will also include a new fan motor on the make-up fan unit, because the existing fan motor is not compatible with variable frequency drives.

The system saves fan energy directly and cooling energy and steam heat energy through the reduction in exhaust air.

The annual energy savings have been simulated to be:

1. Fan Energy Savings: 46,275 kWh
2. Cooling Savings: 25,899 kWh
3. Steam Savings: 66 MMBTU

ECM 2.5 – Exhaust fan management – motion sensors, night setback, etc

As part of the lighting retrofit project all restrooms will have occupancy controls installed. These controls will use an extra set of dry contacts to turn off bathroom exhaust fans after the bathrooms have been empty for an adjustable length of time.

As part of installing local controls that are interfaced to a central control interface, the larger exhaust fans will be programmed to turn off during unoccupied periods the same way the space temperatures will be setback.

The fan system controls will save fan energy directly. There will be additional cooling energy and steam heat energy through the reduction in exhaust air but these savings were not included because the small bathrooms received very little heating and cooling and the time of day control being added to the Synder and Woolworth buildings accounted for the majority of the heating and cooling energy saved by turning off the shop fans.

The annual exhaust fan management energy savings are estimated to be:

Individual Bathroom Fans with Occ Sensor

#	kW each	kW tot	Hours off
36	0.075	2.70	750.00

kWh Saved = 2,025

Snyder Exhaust Fans

EF	CFM	hp	kW	Hours off
1	3060	0.33	0.25	3500
2	3060	0.33	0.25	3500
3	1380	0.50	0.37	3500
4	1285	0.50	0.37	3500
5	300	0.17	0.12	3500
	9085		1.37	3500

Woolworth Exhaust Fans

EF	CFM	hp	kW	Hours off
1	260	0.10	0.07	3500
2	810	0.17	0.12	3500
3	770	0.17	0.12	3500
4	260	0.10	0.07	3500
5	860	0.25	0.19	3500
	2960		0.58	3500

kWh Saved = 2,045

ECM 3 – Plumbing Measures
Savings Calculations

```
-Account Summary-----------------------------------------------------UT7300A1-
| Account# . . . :    159430     77839       Account Balance :    3676.63-  |
| Account Status : Active                                                   |
| Jur/Zone/Book  :    I   17 1737                                           |
| Name . . . . . : THADDEUS STEVENS COLLEGE                                 |
| Address  . . . : 750 E KING ST                                            |
| Mail Code  . . : 176023113          Account Rates: SWM4                   |
| Transactions                 Meter Reads                                  |
| ADJ  6/10/16    7468.00-      1 M101640628 Rates:  110                    |
| BILL  6/07/16   3791.37          6/01/16  34     A       590        13   |
|  PAY  5/24/16   4858.14-         4/28/16  29     A       590        22   |
| BILL  5/03/16   4858.14          3/30/16  28     A       590        22   |
|  PAY  4/18/16   3448.98-      1 M201468412 Rates:                         |
| BILL  4/05/16   4793.37          6/01/16  34     A     40656         0   |
|  ADJ  3/08/16   1701.55-         4/28/16  29     A     40643         0   |
|  ADJ  3/08/16   1344.39          3/30/16  28     A     40621         0   |
|                                                                           |
| Customer Type: CommInCity Service Type: WtrSwrStWt Rental: NO             |
| Date Moved In:  9/16/2008 # of Units  :    1.0     Phone#: (   )   -     |
|                                                                           |
|                                                                           |
| F4=Messages   F5=Credit Hist   F6=Geo Inq   F7=Budget   F8=Paym Plan      |
-F3=Exit···F12=Cancel···F13=More·Functions···F19=Aging···F20=Shutoff---------
```

Credit → $7468.00-

Donna, (717)735-3427.

On 6/10/16 TEN identified a water meter/billing error, confirmed with City Treasure's Office to establish the $7,468 credit to TSCT.

Please note credit on page 1 of ECM/COST SUBMISSION, and ECM write-up.

			Toilets								Urinals				Sinks			Shower		
Building Name	Location	Floor	4 Bolt Wall	Tank Type	Tank ADA	Floor Mt.	FL. Mt. ADA	3 Bolt Wall	Hands Free Valve	GPF	Urinal	Hands Free Valve	VB Size	GPF	Sinks	Hands Free Faucet	GPM	Shower	GPM	Notes: (V.B. length & size,retrofittable? Ect.)
ARMSTRONG HALL	COMMUNITY RESTROOM	3RD	3							1.6	2			1	3		2.2	4	2.5	BRADLEY SHOWER HEADS
ARMSTRONG HALL	COMMUNITY RESTROOM	2ND	3							1.6	2			1	3		2.2	4	2.5	BRADLEY SHOWER HEADS
ARMSTRONG HALL	COMMUNITY RESTROOM	1ST	3							1.6	2			1	3		2.2	4	2.5	BRADLEY SHOWER HEADS
ARMSTRONG HALL	UNISEX RESTROOM	1ST				1				1.6					1		2.2			
HERRINGTON HALL	COMMUNITY RESTROOM	3RD	3							1.6	2			1	3		2.2	4	2.5	BRADLEY SHOWER HEADS
HERRINGTON HALL	COMMUNITY RESTROOM	2ND	3							1.6	2			1	3		2.2	4	2.5	BRADLEY SHOWER HEADS
HERRINGTON HALL	COMMUNITY RESTROOM	1ST	3							1.6	2			1	3		2.2	4	2.5	BRADLEY SHOWER HEADS
HERRINGTON HALL	UNISEX RESTROOM	1ST				1				1.6					1		2.2			
BOURNE HALL	COMMUNITY RESTROOM	2ND				2				1.6	2			1	3		2.2	3	2.5	BRADLEY SHOWER HEADS
BOURNE HALL	COMMUNITY RESTROOM	1ST				2				1.6	2			1	3		2.2	3	2.5	BRADLEY SHOWER HEADS
BOURNE HALL	COMMUNITY RESTROOM	BASE				1				1.6					1		2.2			
BOURNE HALL	CUSTODIAL CLOSET	2ND													1		3.5			NO RETROFIT
BOURNE HALL	CUSTODIAL CLOSET	1ST													1		3.5			NO RETROFIT
METZGER HALL	COMMUNITY RESTROOM	2ND				2				1.6	2			1	3		2.2	3	2.5	BRADLEY SHOWER HEADS
METZGER HALL	COMMUNITY RESTROOM	1ST				2				1.6	2			1	3		2.2	3	2.5	BRADLEY SHOWER HEADS
METZGER HALL	COMMUNITY RESTROOM	BASE				1				1.6					1		2.2			
METZGER HALL	CUSTODIAL CLOSET	2ND													1		3.5			NO RETROFIT
METZGER HALL	CUSTODIAL CLOSET	1ST													1		3.5			NO RETROFIT
BRENNER HALL	COMMUNITY RESTROOM	3RD				1				1.6					2		2.2	1	2.5	
BRENNER HALL	COMMUNITY RESTROOM	2ND				2				1.6					3		2.2	2	2.5	
BRENNER HALL	COMMUNITY RESTROOM	1ST				3				1.6					3		2.2	2	2.5	
BRENNER HALL	UNISEX RESTROOM	1ST		1						1.6					1		2.2			
MELLOR BUILDING	MENS RESTROOM	3RD	1							3.5					1		2.2			
MELLOR BUILDING	WOMENS RESTROOM	3RD	1							3.5					1		2.2			
MELLOR BUILDING	UNISEX RESTROOM	3RD				1				3.5					1		2.2			
MELLOR BUILDING	UNISEX RESTROOM	2ND				1				3.5					1		2.2			
MELLOR BUILDING	MENS RESTROOM	1ST	1							3.5					1		2.2			
MELLOR BUILDING	WOMENS RESTROOM	1ST	1							3.5					1		2.2			
MELLOR BUILDING	PRESIDENTS RESTROOM	1ST				1				3.5					1		2.2			
MELLOR BUILDING	MENS RESTROOM	BASE				3				3.5	1			1	2		2.2			
TOM HENCE BUILDING (COLLEGE STORE)	UNISEX RESTROOM	1ST		1						1.6					1		2.2			
TOM HENCE BUILDING (COLLEGE STORE)	MENS RESTROOM	2ND		1						1.6					1		2.2			
TOM HENCE BUILDING (COLLEGE STORE)	WOMENS RESTROOM	2ND		1						1.6					2		2.2			
SCHULER LEARNING RESOURCE CENTER	MENS RESTROOM	2ND	2							3.5	1			1	2		2.2			
SCHULER LEARNING RESOURCE CENTER	WOMENS RESTROOM	2ND	2							3.5					2		2.2			
SCHULER LEARNING RESOURCE CENTER	COMPUTER LAB RESTROOM	1ST		1						1.6					1		2.2			UTILITY SINK
SCHWALM STUDENT CENTER	MENS RESTROOM	1ST				2				1.6	1			2.5	2		2.2			
SCHWALM STUDENT CENTER	WOMENS RESTROOM	1ST				2				1.6					2		2.2			
HARTZELL BUILDING	MENS RESTROOM	1ST	3							3.5	6			2.5	4		2.2			
HARTZELL BUILDING	WOMENS RESTROOM	1ST	1							3.5					1		2.2			
JONES DINING HALL	MENS RESTROOM	1ST	5							3.5	4			1	6		2.2			
JONES DINING HALL	WOMENS RESTROOM	1ST	2							3.5					1		2.2			
MAINTENANCE BUILDING	UNISEX RESTROOM	1ST				1				3.5	1			2.5	1		2.2	1	2.5	
MULTIPURPOSE ACTIVITY CENTER	MENS LOCKER ROOM	2ND	2							3.5	2			2.5	4		2.2	11	2.5	BRADLEY SHOWER HEADS
MULTIPURPOSE ACTIVITY CENTER	WOMENS LOCKER ROOM	2ND	3							3.5					4		2.2	11	2.5	BRADLEY SHOWER HEADS
MULTIPURPOSE ACTIVITY CENTER	WOMENS OFFICIALS LOCKER ROOM	1ST	2							3.5					2		2.2	2	2.5	EST. LOCKED
MULTIPURPOSE ACTIVITY CENTER	MENS OFFICIALS LOCKER ROOM	1ST	2							3.5	1			2.5	2		2.2	2	2.5	EST. LOCKED
MULTIPURPOSE ACTIVITY CENTER	WOMENS TEAM ROOM	1ST	5							3.5					3		2.2	7	2.5	BRADLEY SHOWER HEADS
MULTIPURPOSE ACTIVITY CENTER	MENS TEAM ROOM	1ST	3							3.5	2			2.5	3		2.2	7	2.5	EST. LOCKED
MULTIPURPOSE ACTIVITY CENTER	MENS RESTROOM	1ST	3							3.5	6			2.5	8		2.2			
MULTIPURPOSE ACTIVITY CENTER	WOMENS RESTROOM	1ST	18							3.5					8		2.2			
WOOLWORTH BUILDING	PIPEFITTERS SHOP	1ST	1							3.5	2			1	3		3.5			NO AERATORS
WOOLWORTH BUILDING	PLUMBING SHOP	1ST	1							3.5	2			1	3		3.5			EST. LOCKED

			Toilets								Urinals				Sinks			Shower		
Building Name	Location	Floor	4 Bolt Wall	Tank Type	Tank ADA	Floor Mt.	FL. Mt. ADA	3 Bolt Wall	Hands Free Valve	GPF	Urinal	Hands Free Valve	VB Size	GPF	Sinks	Hands Free Faucet	GPM	Shower	GPM	Notes: (V.B. length & size,retrofittable? Ect.)
WOOLWORTH BUILDING	WELDERS SHOP	1ST	1							3.5	2			1	3		3.5			EST. LOCKED
SNYDER BUILDING	MENS RESTROOM	1ST				2				3.5	2			1	3		2.2			
SNYDER BUILDING	WOMENS RESTROOM	1ST				2				3.5					2		2.2			
SNYDER BUILDING	ELECTRICAL SHOP RESTROOM	1ST				2				1.6	1			1	2		2.2			
SNYDER BUILDING	AUTOMOTIVE TECH SHOP RESTROOM	1ST				2				3.5	1			2.5	2		2.2			
SNYDER BUILDING	AUTOBODY SHOP RESTROOM	1ST				2				1.6	1			2.5	2		2.2			
LEONARD BUILDING	MACHINE SHOP RESTROOM	1ST				2				1.6	1			1	2		2.2			
LEONARD BUILDING	HVAC SHOP 2 RESTROOM	1ST				2				1.6	2			1	1		2.2			
LEONARD BUILDING	HVAC SHOP 3 RESTROOM	1ST				2				1.6	2			1	1		2.2			
LEONARD BUILDING	HVAC SHOP RESTROOM	1ST				2				1.6	2			1	1		2.2			
LEONARD BUILDING	HVAC SHOP RESTROOM	1ST				2				1.6	2			1	1		2.2			
KREIDER BUILDING	MENS RESTROOM	2ND	3							3.5	3			2.5	4		2.2			
KREIDER BUILDING	UNISEX RESTROOM	2ND	1							3.5					1		2.2			
KREIDER BUILDING	WOMENS RESTROOM	2ND	4							3.5					4		2.2			
KREIDER BUILDING	UNISEX RESTROOM	1ST	1							1.6					1		2.2			
KREIDER BUILDING	MENS RESTROOM	1ST	3							1.6	3			1	4		2.2			
KREIDER BUILDING	WOMENS RESTROOM	1ST	4							1.6					4		2.2			
KREIDER BUILDING	UNISEX RESTROOM	1ST	1							1.6					1		2.2			
Totals			95	5	0	49	0	0	0		71	0			161	0		82		

ECM 4 – Electrical Measures
Savings Calculations

Project: Thaddeus Stevens College of Technology

Line #	Facility	Area	Space	Pre Fixture Qty	Pre Wattage	Pre Code	Pre Description	Post Fixture Qty	Post Wattage	Post Code	Post Description	Hours Pre	Hours Code	Base kW	Retro Proposed kW	Base kWh	Retro Proposed kWh
1	MELLOR BUILDING	3RD FLOOR	ELEVATOR	1	56	WM-S4-F42ILL-NL	4' Strip Wall Mounted Fluorescent, (2) 48", T-8 lamp, Instant Start Ballast, NLO (BF: .85-.95) (No Diffuser)	1	30	LEDT8 LEDT8/4/15W/2	Wall Mounted T8 LED Retrofit Lamp with External Driver LED 4' T8 Lamp (2) 15W Lamps	8760	EMERG	0.056	0.030	491.00	262.80
2	MELLOR BUILDING	3RD FLOOR	HALLWAY	3	29	PE-W4-F41ILL-W	4' Wraparound Pendant Mounted Fluorescent, (1) 48", T-8 lamp, Instant Start Ballast, NLO (BF: .85-.95) Acrylic Wrap-Around Diffuser	3	15	LEDT8 LEDT8/4/15W/1	Pendant Mounted T8 LED Retrofit Lamp with External Driver LED 4' T8 Lamp (1) 15W Lamp	2520	CORR	0.088	0.045	222.64	113.40
3	MELLOR BUILDING	3RD FLOOR	CLASSROOM 309	15	56	R-2X4-F42ILL-PR	2'x4' Troffer Recessed Fluorescent, (2) 48", T-8 lamp, Instant Start Ballast, NLO (BF: .85-.95) Prismatic Acrylic Diffuser	15	30	LEDT8 LEDT8/4/15W/2	Recessed T8 LED Retrofit Lamp with External Driver LED 4' T8 Lamp (2) 15W Lamps	2200	CLASS	0.841	0.450	1849.65	990.00
4	MELLOR BUILDING	3RD FLOOR	CLASSROOM 307	6	56	R-2X4-F42ILL-PR	2'x4' Troffer Recessed Fluorescent, (2) 48", T-8 lamp, Instant Start Ballast, NLO (BF: .85-.95) Prismatic Acrylic Diffuser	6	30	LEDT8 LEDT8/4/15W/2	Recessed T8 LED Retrofit Lamp with External Driver LED 4' T8 Lamp (2) 15W Lamps	2200	CLASS	0.336	0.180	739.86	396.00
5	MELLOR BUILDING	3RD FLOOR	OFFICE 305	1	106	S-W4-F44ILL-W	4' Wraparound Surface Mounted Fluorescent, (4) 48", T-8 lamp, Instant Start Ballast, NLO (BF: .85-.95) Acrylic Wrap-Around Diffuser	1	30	CKW42 LEDT8/4/15W/2	Surface Mounted Install 4' Wrap Centering Kit LED 4' T8 Lamp (2) 15W Lamps	2080	OFFICE	0.106	0.030	221.31	62.40
6	MELLOR BUILDING	3RD FLOOR	OFFICE 305	2	85	R-2X4-F43ILL-PR	2'x4' Troffer Recessed Fluorescent, (3) 48", T-8 lamp, Instant Start Ballast, NLO (BF: .85-.95) Prismatic Acrylic Diffuser	2	30	CK2x4 LEDT8/4/15W/2	Recessed Install 2x4 2-Lamp Centering Kit LED 4' T8 Lamp (2) 15W Lamps	2080	OFFICE	0.169	0.060	351.73	124.80
7	MELLOR BUILDING	3RD FLOOR	OFFICE 304	2	56	PE-IND4-F42ILL-NL	4' Industrial Pendant Mounted Fluorescent, (2) 48", T-8 lamp, Instant Start Ballast, NLO (BF: .85-.95) (No Diffuser)	2	30	LEDT8 LEDT8/4/15W/2	Pendant Mounted T8 LED Retrofit Lamp with External Driver LED 4' T8 Lamp (2) 15W Lamps	2080	OFFICE	0.112	0.060	233.17	124.80
8	MELLOR BUILDING	3RD FLOOR	OFFICE 302	1	56	S-W4-F42ILL-W	4' Wraparound Surface Mounted Fluorescent, (2) 48", T-8 lamp, Instant Start Ballast, NLO (BF: .85-.95) Acrylic Wrap-Around Diffuser	1	30	CKW42 LEDT8/4/15W/2	Surface Mounted Install 4' Wrap Centering Kit LED 4' T8 Lamp (2) 15W Lamps	2080	OFFICE	0.056	0.030	116.58	62.40
9	MELLOR BUILDING	3RD FLOOR	CLASSROOM 303	15	56	R-2X4-F42ILL-PR	2'x4' Troffer Recessed Fluorescent, (2) 48", T-8 lamp, Instant Start Ballast, NLO (BF: .85-.95) Prismatic Acrylic Diffuser	15	30	CK2x4 LEDT8/4/15W/2	Recessed Install 2x4 2-Lamp Centering Kit LED 4' T8 Lamp (2) 15W Lamps	2200	CLASS	0.841	0.450	1849.65	990.00
10	MELLOR BUILDING	3RD FLOOR	RESTROOM	1	14	S-KLS-CFS15/1-NL	Bare-Lamp Keyless Socket Surface Mounted Compact Fluorescent, spiral, (1) 15W lamp (No Diffuser)	1	14	N/R NONE	Surface Mounted No Retrofit To remain as is.	1040	PRIV RESTROOM	0.014	0.014	14.82	14.82
11	MELLOR BUILDING	3RD FLOOR	CLASSROOM 301	15	56	R-2X4-F42ILL-PR	2'x4' Troffer Recessed Fluorescent, (2) 48", T-8 lamp, Instant Start Ballast, NLO (BF: .85-.95) Prismatic Acrylic Diffuser	15	30	CK2x4 LEDT8/4/15W/2	Recessed Install 2x4 2-Lamp Centering Kit LED 4' T8 Lamp (2) 15W Lamps	2200	CLASS	0.841	0.450	1849.65	990.00
12	MELLOR BUILDING	3RD FLOOR	MENS RESTROOM	1	56	S-W4-F42ILL-W	4' Wraparound Surface Mounted Fluorescent, (2) 48", T-8 lamp, Instant Start Ballast, NLO (BF: .85-.95) Acrylic Wrap-Around Diffuser	1	30	CKW42 LEDT8/4/15W/2	Surface Mounted Install 4' Wrap Centering Kit LED 4' T8 Lamp (2) 15W Lamps	2160	RESTROOM	0.056	0.030	121.07	64.80
13	MELLOR BUILDING	3RD FLOOR	WOMENS RESTROOM	1	56	S-W4-F42ILL-W	4' Wraparound Surface Mounted Fluorescent, (2) 48", T-8 lamp, Instant Start Ballast, NLO (BF: .85-.95) Acrylic Wrap-Around Diffuser	1	30	CKW42 LEDT8/4/15W/2	Surface Mounted Install 4' Wrap Centering Kit LED 4' T8 Lamp (2) 15W Lamps	2160	RESTROOM	0.056	0.030	121.07	64.80
14	MELLOR BUILDING	3RD FLOOR	HALLWAY	5	106	S-W4-F44ILL-W	4' Wraparound Surface Mounted Fluorescent, (4) 48", T-8 lamp, Instant Start Ballast, NLO (BF: .85-.95) Acrylic Wrap-Around Diffuser	5	30	CKW42 LEDT8/4/15W/2	Surface Mounted Install 4' Wrap Centering Kit LED 4' T8 Lamp (2) 15W Lamps	2520	CORR	0.532	0.150	1340.64	378.00
15	MELLOR BUILDING	3RD FLOOR	CUSTODIAL CLOSET	1	57	S-KLS-I60/1-NL	Bare-Lamp Keyless Socket Surface Mounted Incandescent, (1) 60W lamp (No Diffuser)	1	11	LEDS/A LEDS11/1	Surface Mounted Install LED Screw-in A-Style Lamp Light Emitting Diode Lamp, Screw-in, (1) 11W lamp	720	JC	0.057	0.011	41.04	7.92
16	MELLOR BUILDING	ALL AREAS	STAIRWELL 1	7	56	S-W4-F42ILL-W	4' Wraparound Surface Mounted Fluorescent, (2) 48", T-8 lamp, Instant Start Ballast, NLO (BF: .85-.95) Acrylic Wrap-Around Diffuser	7	30	LEDT8 LEDT8/4/15W/2	Surface Mounted T8 LED Retrofit Lamp with External Driver LED 4' T8 Lamp (2) 15W Lamps	8760	EMERG	0.392	0.210	3436.99	1839.60
17	MELLOR BUILDING	2ND FLOOR	CLASSROOM 209	10	106	S-W4-F44ILL-W	4' Wraparound Surface Mounted Fluorescent, (4) 48", T-8 lamp, Instant Start Ballast, NLO (BF: .85-.95) Acrylic Wrap-Around Diffuser	10	60	LEDT8 LEDT8/4/15W/4	Surface Mounted T8 LED Retrofit Lamp with External Driver LED 4' T8 Lamp (4) 15W Lamps	2200	CLASS	1.064	0.600	2340.80	1320.00
18	MELLOR BUILDING	2ND FLOOR	CLASSROOM 207	12	106	S-W4-F44ILL-W	4' Wraparound Surface Mounted Fluorescent, (4) 48", T-8 lamp, Instant Start Ballast, NLO (BF: .85-.95) Acrylic Wrap-Around Diffuser	12	60	LEDT8 LEDT8/4/15W/4	Surface Mounted T8 LED Retrofit Lamp with External Driver LED 4' T8 Lamp (4) 15W Lamps	2200	CLASS	1.277	0.720	2808.96	1584.00
19	MELLOR BUILDING	2ND FLOOR	CUSTODIAL CLOSET	1	22	S-KLS-CFS23/1-NL	Bare-Lamp Keyless Socket Surface Mounted Compact Fluorescent, spiral, (1) 23W lamp (No Diffuser)	1	11	LEDS/A LEDS11/1	Surface Mounted Install LED Screw-in A-Style Lamp Light Emitting Diode Lamp, Screw-in, (1) 11W lamp	720	JC	0.022	0.011	15.73	7.92
20	MELLOR BUILDING	2ND FLOOR	OFFICE 204	1	106	S-W4-F44ILL-W	4' Wraparound Surface Mounted Fluorescent, (4) 48", T-8 lamp, Instant Start Ballast, NLO (BF: .85-.95) Acrylic Wrap-Around Diffuser	1	30	CKW42 LEDT8/4/15W/2	Surface Mounted Install 4' Wrap Centering Kit LED 4' T8 Lamp (2) 15W Lamps	2080	OFFICE	0.106	0.030	221.31	62.40
21	MELLOR BUILDING	2ND FLOOR	AUDITORIUM 210	24	56	R-2X4-F42ILL-PR	2'x4' Troffer Recessed Fluorescent, (2) 48", T-8 lamp, Instant Start Ballast, NLO (BF: .85-.95) Prismatic Acrylic Diffuser	24	30	LEDT8 LEDT8/4/15W/2	Recessed T8 LED Retrofit Lamp with External Driver LED 4' T8 Lamp (2) 15W Lamps	2200	CLASS	1.345	0.720	2959.44	1584.00
22	MELLOR BUILDING	2ND FLOOR	AUDITORIUM 210	2	56	S-W4-F42ILL-W	4' Wraparound Surface Mounted Fluorescent, (2) 48", T-8 lamp, Instant Start Ballast, NLO (BF: .85-.95) Acrylic Wrap-Around Diffuser	2	30	LEDT8 LEDT8/4/15W/2	Surface Mounted T8 LED Retrofit Lamp with External Driver LED 4' T8 Lamp (2) 15W Lamps	2200	CLASS	0.112	0.060	246.62	132.00
23	MELLOR BUILDING	2ND FLOOR	OFFICE 205	4	56	R-2X4-F42ILL-PR	2'x4' Troffer Recessed Fluorescent, (2) 48", T-8 lamp, Instant Start Ballast, NLO (BF: .85-.95) Prismatic Acrylic Diffuser	4	30	LEDT8 LEDT8/4/15W/2	Recessed T8 LED Retrofit Lamp with External Driver LED 4' T8 Lamp (2) 15W Lamps	2080	OFFICE	0.224	0.120	466.34	249.60
24	MELLOR BUILDING	2ND FLOOR	CLASSROOM 203	12	106	S-W4-F44ILL-W	4' Wraparound Surface Mounted Fluorescent, (4) 48", T-8 lamp, Instant Start Ballast, NLO (BF: .85-.95) Acrylic Wrap-Around Diffuser	12	60	LEDT8 LEDT8/4/15W/4	Surface Mounted T8 LED Retrofit Lamp with External Driver LED 4' T8 Lamp (4) 15W Lamps	2200	CLASS	1.277	0.720	2808.96	1584.00
25	MELLOR BUILDING	2ND FLOOR	CLASSROOM 201	10	106	S-W4-F44ILL-W	4' Wraparound Surface Mounted Fluorescent, (4) 48", T-8 lamp, Instant Start Ballast, NLO (BF: .85-.95) Acrylic Wrap-Around Diffuser	10	60	LEDT8 LEDT8/4/15W/4	Surface Mounted T8 LED Retrofit Lamp with External Driver LED 4' T8 Lamp (4) 15W Lamps	2200	CLASS	1.064	0.600	2340.80	1320.00
26	MELLOR BUILDING	2ND FLOOR	OFFICE 202	1	106	S-W4-F44ILL-W	4' Wraparound Surface Mounted Fluorescent, (4) 48", T-8 lamp, Instant Start Ballast, NLO (BF: .85-.95) Acrylic Wrap-Around Diffuser	1	30	CKW42 LEDT8/4/15W/2	Surface Mounted Install 4' Wrap Centering Kit LED 4' T8 Lamp (2) 15W Lamps	2080	OFFICE	0.106	0.030	221.31	62.40
27	MELLOR BUILDING	2ND FLOOR	HALLWAY	5	106	S-W4-F44ILL-W	4' Wraparound Surface Mounted Fluorescent, (4) 48", T-8 lamp, Instant Start Ballast, NLO (BF: .85-.95) Acrylic Wrap-Around Diffuser	5	30	CKW42 LEDT8/4/15W/2	Surface Mounted Install 4' Wrap Centering Kit LED 4' T8 Lamp (2) 15W Lamps	2520	CORR	0.532	0.150	1340.64	378.00
28	MELLOR BUILDING	1ST FLOOR	HALLWAY	7	106	S-W4-F44ILL-W	4' Wraparound Surface Mounted Fluorescent, (4) 48", T-8 lamp, Instant Start Ballast, NLO (BF: .85-.95) Acrylic Wrap-Around Diffuser	7	30	CKW42 LEDT8/4/15W/2	Surface Mounted Install 4' Wrap Centering Kit LED 4' T8 Lamp (2) 15W Lamps	2520	CORR	0.745	0.210	1876.90	529.20
29	MELLOR BUILDING	1ST FLOOR	OFFICE 102	18	106	R-2X4-F44ILL-PR	2'x4' Troffer Recessed Fluorescent, (4) 48", T-8 lamp, Instant Start Ballast, NLO (BF: .85-.95) Prismatic Acrylic Diffuser	18	30	CK2x4 LEDT8/4/15W/2	Recessed Install 2x4 2-Lamp Centering Kit LED 4' T8 Lamp (2) 15W Lamps	2080	OFFICE	1.915	0.540	3983.62	1123.20
30	MELLOR BUILDING	1ST FLOOR	OFFICE 102	8	57	R-REC/6-I60/1-NL	Recessed Can 6" Recessed Incandescent, (1) 60W lamp (No Diffuser)	8	10	LEDS/A LEDS10/1	Recessed Install LED Screw-in A-Style Lamp Light Emitting Diode Lamp, Screw-in, (1) 10W lamp	2080	OFFICE	0.456	0.080	948.48	166.40
31	MELLOR BUILDING	1ST FLOOR	CUSTODIAL CLOSET	1	22	S-KLS-CFS23/1-NL	Bare-Lamp Keyless Socket Surface Mounted Compact Fluorescent, spiral, (1) 23W lamp (No Diffuser)	1	11	LEDS/A LEDS11/1	Surface Mounted Install LED Screw-in A-Style Lamp Light Emitting Diode Lamp, Screw-in, (1) 11W lamp	720	JC	0.022	0.011	15.73	7.92
32	MELLOR BUILDING	1ST FLOOR	COPY ROOM	2	56	S-W4-F42ILL-W	4' Wraparound Surface Mounted Fluorescent, (2) 48", T-8 lamp, Instant Start Ballast, NLO (BF: .85-.95) Acrylic Wrap-Around Diffuser	2	30	CKW42 LEDT8/4/15W/2	Surface Mounted Install 4' Wrap Centering Kit LED 4' T8 Lamp (2) 15W Lamps	2080	OFFICE	0.112	0.060	233.17	124.80
33	MELLOR BUILDING	1ST FLOOR	RESTROOM	3	31	R-2X2-F22ILL-PR	2'x2' Troffer Recessed Fluorescent, (2) 24", T-8 lamp, Instant Start Ballast, NLO (BF: .85-.95) Prismatic Acrylic Diffuser	3	20	LEDT8 LEDT8/2/10W/2	Recessed T8 LED Retrofit Lamp with External Driver LED 2' T8 Lamp (2) 10W Lamps	1040	PRIV RESTROOM	0.094	0.060	97.81	62.40
34	MELLOR BUILDING	1ST FLOOR	MENS RESTROOM	4	31	R-2X2-F22ILL-PR	2'x2' Troffer Recessed Fluorescent, (2) 24", T-8 lamp, Instant Start Ballast, NLO (BF: .85-.95) Prismatic Acrylic Diffuser	4	20	LEDT8 LEDT8/2/10W/2	Recessed T8 LED Retrofit Lamp with External Driver LED 2' T8 Lamp (2) 10W Lamps	2160	RESTROOM	0.125	0.080	270.86	172.80
35	MELLOR BUILDING	1ST FLOOR	WOMENS RESTROOM	4	31	R-2X2-F22ILL-PR	2'x2' Troffer Recessed Fluorescent, (2) 24", T-8 lamp, Instant Start Ballast, NLO (BF: .85-.95) Prismatic Acrylic Diffuser	4	20	LEDT8 LEDT8/2/10W/2	Recessed T8 LED Retrofit Lamp with External Driver LED 2' T8 Lamp (2) 10W Lamps	2160	RESTROOM	0.125	0.080	270.86	172.80
36	MELLOR BUILDING	1ST FLOOR	OFFICE 108	2	85	R-2X4-F43ILL-PR	2'x4' Troffer Recessed Fluorescent, (3) 48", T-8 lamp, Instant Start Ballast, NLO (BF: .85-.95) Prismatic Acrylic Diffuser	2	30	CK2x4 LEDT8/4/15W/2	Recessed Install 2x4 2-Lamp Centering Kit LED 4' T8 Lamp (2) 15W Lamps	2080	OFFICE	0.169	0.060	351.73	124.80
37	MELLOR BUILDING	1ST FLOOR	OFFICE 108	2	106	S-2X4-F44ILL-CLOUD	2'x4' Troffer Surface Mounted Fluorescent, (4) 48", T-8 lamp, Instant Start Ballast, NLO (BF: .85-.95) White Plastic Cloud Diffuser	2	30	CK2x4 LEDT8/4/15W/2	Surface Mounted Install 2x4 2-Lamp Centering Kit LED 4' T8 Lamp (2) 15W Lamps	2080	OFFICE	0.213	0.060	442.62	124.80
38	MELLOR BUILDING	1ST FLOOR	OFFICE 108	1	56	R-2X4-F42ILL-MC	2'x4' Troffer Recessed Fluorescent, (2) 48", T-8 lamp, Instant Start Ballast, NLO (BF: .85-.95) Microcell Diffuser	1	30	CK2x4 LEDT8/4/15W/2	Recessed Install 2x4 2-Lamp Centering Kit LED 4' T8 Lamp (2) 15W Lamps	2080	OFFICE	0.056	0.030	116.58	62.40
39	MELLOR BUILDING	1ST FLOOR	OFFICE 107	11	56	R-2X4-F42ILL-MC	2'x4' Troffer Recessed Fluorescent, (2) 48", T-8 lamp, Instant Start Ballast, NLO (BF: .85-.95) Microcell Diffuser	11	30	CK2x4 LEDT8/4/15W/2	Recessed Install 2x4 2-Lamp Centering Kit LED 4' T8 Lamp (2) 15W Lamps	2080	OFFICE	0.617	0.330	1282.42	686.40
40	MELLOR BUILDING	1ST FLOOR	OFFICE 107	1	106	R-2X4-F44ILL-PR	2'x4' Troffer Recessed Fluorescent, (4) 48", T-8 lamp, Instant Start Ballast, NLO (BF: .85-.95) Prismatic Acrylic Diffuser	1	30	CK2x4 LEDT8/4/15W/2	Recessed Install 2x4 2-Lamp Centering Kit LED 4' T8 Lamp (2) 15W Lamps	2080	OFFICE	0.106	0.030	221.31	62.40
41	MELLOR BUILDING	1ST FLOOR	OFFICE 107	4	71	R-REC/6-I75/1-NL	Recessed Can 6" Recessed Incandescent, (1) 75W lamp (No Diffuser)	4	10	LEDS/A LEDS10/1	Recessed Install LED Screw-in A-Style Lamp Light Emitting Diode Lamp, Screw-in, (1) 10W lamp	2080	OFFICE	0.285	0.040	592.80	83.20
42	MELLOR BUILDING	ALL AREAS	STAIRWELL 2	7	56	S-2X4-F42ILL-PR	2'x4' Troffer Surface Mounted Fluorescent, (2) 48", T-8 lamp, Instant Start Ballast, NLO (BF: .85-.95) Prismatic Acrylic Diffuser	7	30	CK2x4 LEDT8/4/15W/2	Surface Mounted Install 2x4 2-Lamp Centering Kit LED 4' T8 Lamp (2) 15W Lamps	8760	EMERG	0.392	0.210	3436.99	1839.60
43	MELLOR BUILDING	1ST FLOOR	OFFICE 105	14	56	R-2X4-F42ILL-PR	2'x4' Troffer Recessed Fluorescent, (2) 48", T-8 lamp, Instant Start Ballast, NLO (BF: .85-.95) Prismatic Acrylic Diffuser	14	30	CK2x4 LEDT8/4/15W/2	Recessed Install 2x4 2-Lamp Centering Kit LED 4' T8 Lamp (2) 15W Lamps	2080	OFFICE	0.785	0.420	1632.18	873.60
44	MELLOR BUILDING	1ST FLOOR	OFFICE 105A	6	56	R-2X4-F42ILL-MC	2'x4' Troffer Recessed Fluorescent, (2) 48", T-8 lamp, Instant Start Ballast, NLO (BF: .85-.95) Microcell Diffuser	6	30	CK2x4 LEDT8/4/15W/2	Recessed Install 2x4 2-Lamp Centering Kit LED 4' T8 Lamp (2) 15W Lamps	2080	OFFICE	0.336	0.180	699.50	374.40
45	MELLOR BUILDING	1ST FLOOR	OFFICE 105B	9	56	R-2X4-F42ILL-MC	2'x4' Troffer Recessed Fluorescent, (2) 48", T-8 lamp, Instant Start Ballast, NLO (BF: .85-.95) Microcell Diffuser	9	30	CK2x4 LEDT8/4/15W/2	Recessed Install 2x4 2-Lamp Centering Kit LED 4' T8 Lamp (2) 15W Lamps	2080	OFFICE	0.504	0.270	1049.26	561.60
46	MELLOR BUILDING	1ST FLOOR	OFFICE 105B	9	22	R-REC/6-CFS23/1-NL	Recessed Can 6" Recessed Compact Fluorescent, spiral, (1) 23W lamp (No Diffuser)	9	10	LEDS/A LEDS10/1	Recessed Install LED Screw-in A-Style Lamp Light Emitting Diode Lamp, Screw-in, (1) 10W lamp	2080	OFFICE	0.197	0.090	409.93	187.20
47	MELLOR BUILDING	BASEMENT	HALLWAY	4	56	R-2X4-F42ILL-PR	2'x4' Troffer Recessed Fluorescent, (2) 48", T-8 lamp, Instant Start Ballast, NLO (BF: .85-.95) Prismatic Acrylic Diffuser	4	30	CK2x4 LEDT8/4/15W/2	Recessed Install 2x4 2-Lamp Centering Kit LED 4' T8 Lamp (2) 15W Lamps	2520	CORR	0.224	0.120	564.98	302.40
48	MELLOR BUILDING	BASEMENT	STORAGE ROOM	4	106	R-2X4-F44ILL-PR	2'x4' Troffer Recessed Fluorescent, (4) 48", T-8 lamp, Instant Start Ballast, NLO (BF: .85-.95) Prismatic Acrylic Diffuser	4	30	CK2x4 LEDT8/4/15W/2	Recessed Install 2x4 2-Lamp Centering Kit LED 4' T8 Lamp (2) 15W Lamps	540	STORAGE	0.426	0.120	229.82	64.80
49	MELLOR BUILDING	BASEMENT	DATA ROOM 003	13	56	R-2X4-F42ILL-PR	2'x4' Troffer Recessed Fluorescent, (2) 48", T-8 lamp, Instant Start Ballast, NLO (BF: .85-.95) Prismatic Acrylic Diffuser	13	30	CK2x4 LEDT8/4/15W/2	Recessed Install 2x4 2-Lamp Centering Kit LED 4' T8 Lamp (2) 15W Lamps	540	STORAGE	0.729	0.390	393.47	210.60
50	MELLOR BUILDING	BASEMENT	HALLWAY	5	56	R-2X4-F42ILL-PR	2'x4' Troffer Recessed Fluorescent, (2) 48", T-8 lamp, Instant Start Ballast, NLO (BF: .85-.95) Prismatic Acrylic Diffuser	5	30	CK2x4 LEDT8/4/15W/2	Recessed Install 2x4 2-Lamp Centering Kit LED 4' T8 Lamp (2) 15W Lamps	2520	CORR	0.280	0.150	706.23	378.00

Line #	Facility	Area	Space	Pre Fixture Qty	Pre Wattage	Pre Code	Pre Description	Post Fixture Qty	Post Wattage	Post Code	Post Description	Hours Pre	Hours Code	Base kW	Retro Proposed kW	Base kWh	Retro Proposed kWh
51	MELLOR BUILDING	BASEMENT	CLASSROOM 001	11	56	R-2X4-F42ILL-PR	2'x4' Troffer Recessed Fluorescent, (2) 48", T-8 lamp, Instant Start Ballast, NLO (BF: .85-.95) Prismatic Acrylic Diffuser	11	30	CK2x4 LEDT8/4/15W/2	Recessed Install 2x4 2-Lamp Centering Kit LED 4' T8 Lamp (2) 15W Lamps	2200	CLASS	0.617	0.330	1356.41	726.00
52	MELLOR BUILDING	BASEMENT	HALLWAY	1	31	S-WY2-F22ILL-W	2' Wraparound Surface Mounted Fluorescent, (2) 24", T-8 lamp, Instant Start Ballast, NLO (BF: .85-.95) Acrylic Wrap-Around Diffuser	1	20	LEDT8 LEDT8/2/10W/2	Surface Mounted T8 LED Retrofit Lamp with External Driver LED 2' T8 Lamp (2) 10W Lamps	2520	CORR	0.031	0.020	79.00	50.40
53	MELLOR BUILDING	BASEMENT	MENS RESTROOM	2	31	R-2X2-F22ILL-PR	2'x2' Troffer Recessed Fluorescent, (2) 24", T-8 lamp, Instant Start Ballast, NLO (BF: .85-.95) Prismatic Acrylic Diffuser	2	20	LEDT8 LEDT8/2/10W/2	Recessed T8 LED Retrofit Lamp with External Driver LED 2' T8 Lamp (2) 10W Lamps	2160	RESTROOM	0.063	0.040	135.43	86.4
54	MELLOR BUILDING	BASEMENT	MENS RESTROOM	2	56	R-2X4-F42ILL-PR	2'x4' Troffer Recessed Fluorescent, (2) 48", T-8 lamp, Instant Start Ballast, NLO (BF: .85-.95) Prismatic Acrylic Diffuser	2	30	CK2x4 LEDT8/4/15W/2	Recessed Install 2x4 2-Lamp Centering Kit LED 4' T8 Lamp (2) 15W Lamps	2160	RESTROOM	0.112	0.060	242.14	129.60
55	MELLOR BUILDING	BASEMENT	WOMENS RESTROOM	2	31	R-2X2-F22ILL-PR	2'x2' Troffer Recessed Fluorescent, (2) 24", T-8 lamp, Instant Start Ballast, NLO (BF: .85-.95) Prismatic Acrylic Diffuser	2	20	LEDT8 LEDT8/2/10W/2	Recessed T8 LED Retrofit Lamp with External Driver LED 2' T8 Lamp (2) 10W Lamps	2160	RESTROOM	0.063	0.040	135.43	86.40
56	MELLOR BUILDING	BASEMENT	WOMENS RESTROOM	2	56	R-2X4-F42ILL-PR	2'x4' Troffer Recessed Fluorescent, (2) 48", T-8 lamp, Instant Start Ballast, NLO (BF: .85-.95) Prismatic Acrylic Diffuser	2	30	CK2x4 LEDT8/4/15W/2	Recessed Install 2x4 2-Lamp Centering Kit LED 4' T8 Lamp (2) 15W Lamps	2160	RESTROOM	0.112	0.060	242.14	129.60
57	MELLOR BUILDING	BASEMENT	CLOTHING STORAGE	4	56	R-2X4-F42ILL-PR	2'x4' Troffer Recessed Fluorescent, (2) 48", T-8 lamp, Instant Start Ballast, NLO (BF: .85-.95) Prismatic Acrylic Diffuser	4	30	CK2x4 LEDT8/4/15W/2	Recessed Install 2x4 2-Lamp Centering Kit LED 4' T8 Lamp (2) 15W Lamps	540	STORAGE	0.224	0.120	121.07	64.80
58	MELLOR BUILDING	BASEMENT	WOMENS CENTER 101	14	56	R-2X4-F42ILL-PR	2'x4' Troffer Recessed Fluorescent, (2) 48", T-8 lamp, Instant Start Ballast, NLO (BF: .85-.95) Prismatic Acrylic Diffuser	14	30	CK2x4 LEDT8/4/15W/2	Recessed Install 2x4 2-Lamp Centering Kit LED 4' T8 Lamp (2) 15W Lamps	2080	OFFICE	0.785	0.420	1632.18	873.60
59	MELLOR BUILDING	BASEMENT	MECHANICAL ROOM	7	22	S-KLS-CFS23/1-NL	Bare-Lamp Keyless Socket Surface Mounted Compact Fluorescent, spiral, (1) 23W lamp (No Diffuser)	7	22	N/R NONE	Surface Mounted No Retrofit To remain as is.	540	STORAGE	0.153	0.153	82.59	82.59
60	MELLOR BUILDING	BASEMENT	STORAGE ROOM 013	2	106	S-2X4-F44ILL-PR	2'x4' Troffer Surface Mounted Fluorescent, (4) 48", T-8 lamp, Instant Start Ballast, NLO (BF: .85-.95) Prismatic Acrylic Diffuser	2	30	CK2x4 LEDT8/4/15W/2	Surface Mounted Install 2x4 2-Lamp Centering Kit LED 4' T8 Lamp (2) 15W Lamps	540	STORAGE	0.213	0.060	114.61	32.40
61	KENNETH W. SCHULER CENTER	3RD FLOOR	ARCHIVE ROOM	2	57	PE-GLOBE-I60/1-NL	Globe Pendant Mounted Incandescent, (1) 60W lamp (No Diffuser)	2	12	LEDSI/G25 LEDS12/1	Pendant Mounted Install LED Screw-in G25 Globe Lamp Light Emitting Diode Lamp, Screw-In, (1) 12W lamp	2080	OFFICE	0.114	0.024	237.12	49.92
62	KENNETH W. SCHULER CENTER	ALL AREAS	STAIRWELL	10	63	R-REC/8-CFO26/2-NL	Recessed Can 8" Recessed Compact Fluorescent, quad, (2) 26W lamp (No Diffuser)	10	63	N/R NONE	Recessed No Retrofit. To remain as is.	8760	EMERG	0.627	0.627	5492.52	5492.52
63	KENNETH W. SCHULER CENTER	ALL AREAS	STAIRWELL	6	29	WM-DRUM-CFT13/2-DRUMW	Drum Wall Mounted Compact Fluorescent, twin, (2) 13W lamp White Plastic Drum	6	15	LED/DRUM/KIT/8" LED15W	Wall Mounted Retrofit Existing Drum with 8" LED Kit LED Light Fixture. (1) 15W	8760	EMERG	0.177	0.090	1547.89	788.40
64	KENNETH W. SCHULER CENTER	3RD FLOOR	OPEN LIBRARY	18	56	PE-W4-F42ILL-SL	4' Wraparound Pendant Mounted Fluorescent, (2) 48", T-8 lamp, Instant Start Ballast, NLO (BF: .85-.95) Slotted Metal Diffuser	18	30	CKW42 LEDT8/4/15W/2	Pendant Mounted Install 4' Wrap Centering Kit LED 4' T8 Lamp (2) 15W Lamps	3640	LIBRARY	1.009	0.540	3672.40	1965.60
65	KENNETH W. SCHULER CENTER	3RD FLOOR	OPEN LIBRARY	36	56	PE-W4-F42ILL-SL	4' Wraparound Pendant Mounted Fluorescent, (2) 48", T-8 lamp, Instant Start Ballast, NLO (BF: .85-.95) Slotted Metal Diffuser	36	30	CKW42 LEDT8/4/15W/2	Pendant Mounted Install 4' Wrap Centering Kit LED 4' T8 Lamp (2) 15W Lamps	3640	LIBRARY	2.018	1.080	7344.79	3931.20
66	KENNETH W. SCHULER CENTER	3RD FLOOR	OPEN LIBRARY	12	38	PE-H4-CFS40/1-NL	High-Hat Pendant Mounted Compact Fluorescent, spiral, (1) 40W lamp (No Diffuser)	12	26	LEDSI/A LEDS26/1	Pendant Mounted Install LED Screw-in A-Style Lamp Light Emitting Diode Lamp, Screw-in, (1) 26W lamp	3640	LIBRARY	0.456	0.312	1659.84	1135.68
67	KENNETH W. SCHULER CENTER	3RD FLOOR	OPEN LIBRARY	18	56	PE-W4-F42ILL-SL	4' Wraparound Pendant Mounted Fluorescent, (2) 48", T-8 lamp, Instant Start Ballast, NLO (BF: .85-.95) Slotted Metal Diffuser	18	30	CKW42 LEDT8/4/15W/2	Pendant Mounted Install 4' Wrap Centering Kit LED 4' T8 Lamp (2) 15W Lamps	3640	LIBRARY	1.009	0.540	3672.40	1965.60
68	KENNETH W. SCHULER CENTER	3RD FLOOR	OPEN LIBRARY	36	56	PE-W4-F42ILL-SL	4' Wraparound Pendant Mounted Fluorescent, (2) 48", T-8 lamp, Instant Start Ballast, NLO (BF: .85-.95) Slotted Metal Diffuser	36	30	CKW42 LEDT8/4/15W/2	Pendant Mounted Install 4' Wrap Centering Kit LED 4' T8 Lamp (2) 15W Lamps	3640	LIBRARY	2.018	1.080	7344.79	3931.20
69	KENNETH W. SCHULER CENTER	3RD FLOOR	GROUP STUDY 303	4	63	R-REC/8-CFO26/2-NL	Recessed Can 8" Recessed Compact Fluorescent, quad, (2) 26W lamp (No Diffuser)	4	63	N/R NONE	Recessed No Retrofit. To remain as is.	2200	CLASS	0.251	0.251	551.76	551.76
70	KENNETH W. SCHULER CENTER	3RD FLOOR	GROUP STUDY 303	1	22	PE-H4-CFS23/1-NL	High-Hat Pendant Mounted Compact Fluorescent, spiral, (1) 23W lamp (No Diffuser)	1	10	LEDSI/A LEDS10/1	Pendant Mounted Install LED Screw-in A-Style Lamp Light Emitting Diode Lamp, Screw-in, (1) 10W lamp	2200	CLASS	0.022	0.010	48.07	22.00
71	KENNETH W. SCHULER CENTER	3RD FLOOR	GROUP STUDY 304	4	63	R-REC/8-CFO26/2-NL	Recessed Can 8" Recessed Compact Fluorescent, quad, (2) 26W lamp (No Diffuser)	4	63	N/R NONE	Recessed No Retrofit. To remain as is.	2200	CLASS	0.251	0.251	551.76	551.76
72	KENNETH W. SCHULER CENTER	3RD FLOOR	GROUP STUDY 304	1	22	PE-H4-CFS23/1-NL	High-Hat Pendant Mounted Compact Fluorescent, spiral, (1) 23W lamp (No Diffuser)	1	10	LEDSI/A LEDS10/1	Pendant Mounted Install LED Screw-in A-Style Lamp Light Emitting Diode Lamp, Screw-in, (1) 10W lamp	2200	CLASS	0.022	0.010	48.07	22.00
73	KENNETH W. SCHULER CENTER	3RD FLOOR	GROUP STUDY 305	4	63	R-REC/8-CFO26/2-NL	Recessed Can 8" Recessed Compact Fluorescent, quad, (2) 26W lamp (No Diffuser)	4	63	N/R NONE	Recessed No Retrofit. To remain as is.	2200	CLASS	0.251	0.251	551.76	551.76
74	KENNETH W. SCHULER CENTER	3RD FLOOR	GROUP STUDY 305	1	22	PE-H4-CFS23/1-NL	High-Hat Pendant Mounted Compact Fluorescent, spiral, (1) 23W lamp (No Diffuser)	1	10	LEDSI/A LEDS10/1	Pendant Mounted Install LED Screw-in A-Style Lamp Light Emitting Diode Lamp, Screw-in, (1) 10W lamp	2200	CLASS	0.022	0.010	48.07	22.00
75	KENNETH W. SCHULER CENTER	2ND FLOOR	STUDENT LOUNGE	11	56	R-2X4-F42ILL-MC	2'x4' Troffer Recessed Fluorescent, (2) 48", T-8 lamp, Instant Start Ballast, NLO (BF: .85-.95) Microcell Diffuser	11	30	CK2x4 LEDT8/4/15W/2	Recessed Install 2x4 2-Lamp Centering Kit LED 4' T8 Lamp (2) 15W Lamps	2200	CLASS	0.617	0.330	1356.41	726.00
76	KENNETH W. SCHULER CENTER	2ND FLOOR	STUDENT LOUNGE	8	63	R-REC/8-CFO26/2-NL	Recessed Can 8" Recessed Compact Fluorescent, quad, (2) 26W lamp (No Diffuser)	8	63	N/R NONE	Recessed No Retrofit. To remain as is.	2200	CLASS	0.502	0.502	1103.52	1103
77	KENNETH W. SCHULER CENTER	2ND FLOOR	STUDENT LOUNGE	6	22	TR-TRACK-CFS23/1-NL	Track Light Track Mounted Compact Fluorescent, spiral, (1) 23W lamp (No Diffuser)	6	10	LEDSI/A LEDS10/1	Track Mounted Install LED Screw-in A-Style Lamp Light Emitting Diode Lamp, Screw-in, (1) 10W lamp	2200	CLASS	0.131	0.060	288.42	132.00
78	KENNETH W. SCHULER CENTER	2ND FLOOR	MENS RESTROOM	4	56	R-2X4-F42ILL-PR	2'x4' Troffer Recessed Fluorescent (2) 48", T-8 lamp, Instant Start Ballast, NLO (BF: .85-.95) Prismatic Acrylic Diffuser	4	30	CK2x4 LEDT8/4/15W/2	Recessed Install 2x4 2-Lamp Centering Kit LED 4' T8 Lamp (2) 15W Lamps	2160	RESTROOM	0.224	0.120	484.27	259.20
79	KENNETH W. SCHULER CENTER	2ND FLOOR	WOMENS RESTROOM	4	56	R-2X4-F42ILL-PR	2'x4' Troffer Recessed Fluorescent, (2) 48", T-8 lamp, Instant Start Ballast, NLO (BF: .85-.95) Prismatic Acrylic Diffuser	4	30	CK2x4 LEDT8/4/15W/2	Recessed Install 2x4 2-Lamp Centering Kit LED 4' T8 Lamp (2) 15W Lamps	2160	RESTROOM	0.224	0.120	484.27	259.20
80	KENNETH W. SCHULER CENTER	1ST FLOOR	LOWER LIBRARY OPEN AREA	27	31	R-2X2-F22ILL-VO	2'x2' Troffer Recessed Fluorescent, (2) 24", T-8 lamp, Instant Start Ballast, NLO (BF: .85-.95) Volumetric Prismatic Lens	27	20	LEDT8 LEDT8/2/10W/2	Recessed T8 LED Retrofit Lamp with External Driver LED 2' T8 Lamp (2) 10W Lamps	3640	LIBRARY	0.846	0.540	3081.08	1965.60
81	KENNETH W. SCHULER CENTER	1ST FLOOR	LOWER LIBRARY OPEN AREA	10	63	R-REC/8-CFO26/2-NL	Recessed Can 8" Recessed Compact Fluorescent, quad, (2) 26W lamp (No Diffuser)	10	63	N/R NONE	Recessed No Retrofit. To remain as is.	3640	LIBRARY	0.627	0.627	2282.28	2282.28
82	KENNETH W. SCHULER CENTER	1ST FLOOR	BOOK FILES ROOM	10	56	PE-W4-F42ILL-SL	4' Wraparound Pendant Mounted Fluorescent, (2) 48", T-8 lamp, Instant Start Ballast, NLO (BF: .85-.95) Slotted Metal Diffuser	10	30	CKW42 LEDT8/4/15W/2	Pendant Mounted Install 4' Wrap Centering Kit LED 4' T8 Lamp (2) 15W Lamps	2080	OFFICE	0.561	0.300	1165.84	624.00
83	KENNETH W. SCHULER CENTER	1ST FLOOR	BOOK FILES ROOM	7	63	R-REC/8-CFO26/2-NL	Recessed Can 8" Recessed Compact Fluorescent, quad, (2) 26W lamp (No Diffuser)	7	63	N/R NONE	Recessed No Retrofit. To remain as is.	2080	OFFICE	0.439	0.439	912.91	912.91
84	KENNETH W. SCHULER CENTER	1ST FLOOR	BOOK FILES ROOM	5	56	PE-W4-F42ILL-SL	4' Wraparound Pendant Mounted Fluorescent, (2) 48", T-8 lamp, Instant Start Ballast, NLO (BF: .85-.95) Slotted Metal Diffuser	5	30	CKW42 LEDT8/4/15W/2	Pendant Mounted Install 4' Wrap Centering Kit LED 4' T8 Lamp (2) 15W Lamps	2080	OFFICE	0.280	0.150	582.92	312.00
85	KENNETH W. SCHULER CENTER	1ST FLOOR	DIRECTORS OFFICE	2	31	R-2X2-F22ILL-VO	2'x2' Troffer Recessed Fluorescent, (2) 24", T-8 lamp, Instant Start Ballast, NLO (BF: .85-.95) Volumetric Prismatic Lens	2	20	LEDT8 LEDT8/2/10W/2	Recessed T8 LED Retrofit Lamp with External Driver LED 2' T8 Lamp (2) 10W Lamps	2080	OFFICE	0.063	0.040	130.42	83.20
86	KENNETH W. SCHULER CENTER	1ST FLOOR	LIBRARIAN OFFICE	1	31	R-2X2-F22ILL-VO	2'x2' Troffer Recessed Fluorescent, (2) 24", T-8 lamp, Instant Start Ballast, NLO (BF: .85-.95) Volumetric Prismatic Lens	1	20	LEDT8 LEDT8/2/10W/2	Recessed T8 LED Retrofit Lamp with External Driver LED 2' T8 Lamp (2) 10W Lamps	2080	OFFICE	0.031	0.020	65.21	41.60
87	KENNETH W. SCHULER CENTER	1ST FLOOR	COMPUTER LAB	11	56	R-2X4-F42ILL-MC	2'x4' Troffer Recessed Fluorescent, (2) 48", T-8 lamp, Instant Start Ballast, NLO (BF: .85-.95) Microcell Diffuser	11	30	CK2x4 LEDT8/4/15W/2	Recessed Install 2x4 2-Lamp Centering Kit LED 4' T8 Lamp (2) 15W Lamps	2200	CLASS	0.617	0.330	1356.41	726.00
88	KENNETH W. SCHULER CENTER	1ST FLOOR	STUDY LOUNGE	4	63	R-REC/8-CFO26/2-NL	Recessed Can 8" Recessed Compact Fluorescent, quad, (2) 26W lamp (No Diffuser)	4	63	N/R NONE	Recessed No Retrofit To remain as is.	2200	CLASS	0.251	0.251	551.76	551.76
89	KENNETH W. SCHULER CENTER	1ST FLOOR	OFFICE 208	2	56	R-2X4-F42ILL-MC	2'x4' Troffer Recessed Fluorescent, (2) 48", T-8 lamp, Instant Start Ballast, NLO (BF: .85-.95) Microcell Diffuser	2	30	CK2x4 LEDT8/4/15W/2	Recessed Install 2x4 2-Lamp Centering Kit LED 4' T8 Lamp (2) 15W Lamps	2080	OFFICE	0.112	0.060	233.17	124.80
90	KENNETH W. SCHULER CENTER	1ST FLOOR	STUDY ROOM 209/210	8	22	R-REC/6-CFS23/1-NL	Recessed Can 6" Recessed Compact Fluorescent, spiral, (1) 23W lamp (No Diffuser)	8	10	LEDSI/A LEDS10/1	Recessed Install LED Screw-in A-Style Lamp Light Emitting Diode Lamp, Screw-in, (1) 10W lamp	2200	CLASS	0.175	0.080	384.56	176.00
91	KENNETH W. SCHULER CENTER	1ST FLOOR	OFFICE 207	2	56	R-2X4-F42ILL-MC	2'x4' Troffer Recessed Fluorescent, (2) 48", T-8 lamp, Instant Start Ballast, NLO (BF: .85-.95) Microcell Diffuser	2	30	CK2x4 LEDT8/4/15W/2	Recessed Install 2x4 2-Lamp Centering Kit LED 4' T8 Lamp (2) 15W Lamps	2080	OFFICE	0.112	0.060	233.17	124.80
92	KENNETH W. SCHULER CENTER	GROUND FLOOR	LOBBY AREA	6	63	R-REC/8-CFO26/2-NL	Recessed Can 8" Recessed Compact Fluorescent, quad, (2) 26W lamp (No Diffuser)	6	63	N/R NONE	Recessed No Retrofit. To remain as is	2520	CORR	0.376	0.376	948.02	948.02
93	KENNETH W. SCHULER CENTER	GROUND FLOOR	LECTURE HALL	12	56	R-2X4-F42ILL-PR	2'x4' Troffer Recessed Fluorescent, (2) 48", T-8 lamp, Instant Start Ballast, NLO (BF: .85-.95) Prismatic Acrylic Diffuser	12	30	CK2x4 LEDT8/4/15W/2	Recessed Install 2x4 2-Lamp Centering Kit LED 4' T8 Lamp (2) 15W Lamps	2200	CLASS	0.673	0.360	1479.72	792.00
94	KENNETH W. SCHULER CENTER	GROUND FLOOR	LECTURE HALL	15	22	R-REC/8-CFS23/1-NL	Recessed Can 8" Recessed Compact Fluorescent, spiral, (1) 23W lamp (No Diffuser)	15	10	LEDSI/A LEDS10/1	Recessed Install LED Screw-in A-Style Lamp Light Emitting Diode Lamp, Screw-in, (1) 10W lamp	2200	CLASS	0.328	0.150	721.05	330.00
95	KENNETH W. SCHULER CENTER	GROUND FLOOR	COMPUTER LAB	12	56	R-2X4-F42ILL-PR	2'x4' Troffer Recessed Fluorescent, (2) 48", T-8 lamp, Instant Start Ballast, NLO (BF: .85-.95) Prismatic Acrylic Diffuser	12	30	CK2x4 LEDT8/4/15W/2	Recessed Install 2x4 2-Lamp Centering Kit LED 4' T8 Lamp (2) 15W Lamps	2200	CLASS	0.673	0.360	1479.72	792.00
96	KENNETH W. SCHULER CENTER	GROUND FLOOR	COMPUTER LAB	15	22	R-REC/6-CFS23/1-PR	Recessed Can 6" Recessed Compact Fluorescent, spiral, (1) 23W lamp Prismatic Acrylic Diffuser	15	10	LEDSI/A LEDS10/1	Recessed Install LED Screw-in A-Style Lamp Light Emitting Diode Lamp, Screw-in, (1) 10W lamp	2200	CLASS	0.328	0.150	721.05	330.00
97	KENNETH W. SCHULER CENTER	GROUND FLOOR	COMPUTER LAB	3	63	R-REC/8-CFO26/2-NL	Recessed Can 8" Recessed Compact Fluorescent, quad (2) 26W lamp (No Diffuser)	3	63	N/R NONE	Recessed No Retrofit. To remain as is.	2200	CLASS	0.188	0.188	413.82	413.82
98	KENNETH W. SCHULER CENTER	GROUND FLOOR	OFFICES	3	56	R-2X4-F42ILL-MC	2'x4' Troffer Recessed Fluorescent, (2) 48", T-8 lamp, Instant Start Ballast, NLO (BF: .85-.95) Microcell Diffuser	3	30	CK2x4 LEDT8/4/15W/2	Recessed Install 2x4 2-Lamp Centering Kit LED 4' T8 Lamp (2) 15W Lamps	2080	OFFICE	0.168	0.090	349.75	187.20
99	KENNETH W. SCHULER CENTER	2ND FLOOR	COMPUTER LAB	22	106	R-2X4-F44ILL-MC	2'x4' Troffer Recessed Fluorescent, (4) 48", T-8 lamp, Instant Start Ballast, NLO (BF: .85-.95) Microcell Diffuser	22	30	CK2x4 LEDT8/4/15W/2	Recessed Install 2x4 2-Lamp Centering Kit LED 4' T8 Lamp (2) 15W Lamps	2200	CLASS	2.341	0.660	5149.76	1452.00
100	KENNETH W. SCHULER CENTER	ALL AREAS	STAIRWELL	5	29	WM-DRUM-CFT13/2-DRUMW	Drum Wall Mounted Compact Fluorescent, twin, (2) 13W lamp White Plastic Drum	5	15	LED/DRUM/KIT/8" LED15W	Wall Mounted Retrofit Existing Drum with 8" LED Kit LED Light Fixture. (1) 15W	8760	EMERG	0.147	0.075	1289.91	657.0
101	KENNETH W. SCHULER CENTER	ALL AREAS	STAIRWELL	4	29	S-DRUM-CFT13/2-DRUMW	Drum Surface Mounted Compact Fluorescent, twin, (2) 13W lamp White Plastic Drum	4	15	LED/DRUM/KIT/8" LED15W	Surface Mounted Retrofit Existing Drum with 8" LED Kit LED Light Fixture. (1) 15W	8760	EMERG	0.118	0.060	1031.93	525.60
102	KENNETH W. SCHULER CENTER	ALL AREAS	STAIRWELL	1	106	R-2X4-F44ILL-PR	2'x4' Troffer Recessed Fluorescent, (4) 48", T-8 lamp, Instant Start Ballast, NLO (BF: .85-.95) Prismatic Acrylic Diffuser	1	30	CK2x4 LEDT8/4/15W/2	Recessed Install 2x4 2-Lamp Centering Kit LED 4' T8 Lamp (2) 15W Lamps	8760	EMERG	0.106	0.030	932.06	262.80

Line #	Facility	Area	Space	Pre Fixture Qty	Pre Wattage	Pre Code	Pre Description	Post Fixture Qty	Post Wattage	Post Code	Post Description	Hours Pre	Hours Code	Base kW	Retro Proposed kW	Base kWh	Retro Proposed kWh
103	KENNETH W. SCHULER CENTER	1ST FLOOR	COMPUTER LAB / CLASSROOM	22	56	R-2X4-F42ILL-MC	2'x4' Troffer Recessed Fluorescent, (2) 48", T-8 lamp, Instant Start Ballast, NLO (BF: .85-.95) Microcell Diffuser	22	30	CK2x4 LEDT8/4/15W/2	Recessed Install 2x4 2-Lamp Centering Kit LED 4' T8 Lamp (2) 15W Lamps	2200	CLASS	1.233	0.660	2712.82	1452.00
[illegible]	KENNETH W. SCHULER CENTER	1ST FLOOR	RESTROOM	1	106	R-2X4-F44ILL-PR	2'x4' Troffer Recessed Fluorescent, (4) 48", T-8 lamp, Instant Start Ballast, NLO (BF: .85-.95) Prismatic Acrylic Diffuser	1	30	CK2x4 LEDT8/4/15W/2	Recessed Install 2x4 2-Lamp Centering Kit LED 4' T8 Lamp (2) 15W Lamps	1040	PRIV RESTROOM	0.106	0.030	110.66	31.20
[illegible]	KENNETH W. SCHULER CENTER	ALL AREAS	STAIRWELL	5	19	S-DRUM-FC22/1-DRUMW	Drum Surface Mounted Fluorescent, Circline, (1) 22W lamp, preheat ballast White Plastic Drum	5	15	LED/DRUM/KIT/8" LED15W	Surface Mounted Retrofit Existing Drum with 8" LED Kit LED Light Fixture. (1) 15W	8760	EMERG	0.095	0.075	832.20	657.00
106	KENNETH W. SCHULER CENTER	BASEMENT	MECHANICAL ROOM	6	106	S-W4-F44ILL-W	4' Wraparound Surface Mounted Fluorescent, (4) 48", T-8 lamp, Instant Start Ballast, NLO (BF: .85-.95) Acrylic Wrap-Around Diffuser	6	30	CKW42 LEDT8/4/15W/2	Surface Mounted Install 4' Wrap Centering Kit LED 4' T8 Lamp (2) 15W Lamps	540	STORAGE	0.638	0.180	344.74	97.20
107	KENNETH W. SCHULER CENTER	BASEMENT	MECHANICAL ROOM	4	56	S-IND4-F42ILL-NL	4' Industrial Surface Mounted Fluorescent, (2) 48", T-8 lamp, Instant Start Ballast, NLO (BF: .85-.95) (No Diffuser)	4	30	LEDT8 LEDT8/4/15W/2	Surface Mounted T8 LED Retrofit Lamp with External Driver LED 4' T8 Lamp (2) 15W Lamps	540	STORAGE	0.224	0.120	121.07	64.80
108	SCHEWALM STUDENT CENTER	2ND FLOOR	UPPER LOUNGE	10	48	TR-TRACK-H50/1-NL	Track Light Track Mounted Halogen Incandescent, (1) 50W lamp (No Diffuser)	10	7	LEDP/MR16 LEDS7/1	Track Mounted Install LED Plug-in MR16 Lamp Light Emitting Diode Lamp, Screw-in, (1) 7W lamp	2520	CORR	0.475	0.070	1197.00	176.40
109	SCHEWALM STUDENT CENTER	2ND FLOOR	UPPER LOUNGE	10	22	WM-JJ-CFS23/1-JJG	Jelly Jar Wall Mounted Compact Fluorescent, spiral, (1) 23W lamp Glass Jelly Jar	10	12	LEDS/A LEDS12/1	Wall Mounted Install LED Screw-in A-Style Lamp Light Emitting Diode Lamp, Screw-in, (1) 12W lamp	2520	CORR	0.216	0.120	550.62	302.40
110	SCHEWALM STUDENT CENTER	ALL AREAS	STAIRWELL	5	56	PE-IND4-F42ILL-ICE	4' Industrial Pendant Mounted Fluorescent, (2) 48", T-8 lamp, Instant Start Ballast, NLO (BF: .85-.95) Ice Tray Diffuser	5	30	LEDT8 LEDT8/4/15W/2	Pendant Mounted T8 LED Retrofit Lamp with External Driver LED 4' T8 Lamp (2) 15W Lamps	8760	EMERG	0.280	0.150	2454.99	1314.00
111	SCHEWALM STUDENT CENTER	1ST FLOOR	STUDENT LOUNGE	5	56	PE-IND4-F42ILL-ICE	4' Industrial Pendant Mounted Fluorescent, (2) 48", T-8 lamp, Instant Start Ballast, NLO (BF: .85-.95) Ice Tray Diffuser	5	30	LEDT8 LEDT8/4/15W/2	Pendant Mounted T8 LED Retrofit Lamp with External Driver LED 4' T8 Lamp (2) 15W Lamps	2200	CLASS	0.280	0.150	616.55	330.00
112	SCHEWALM STUDENT CENTER	1ST FLOOR	STUDENT LOUNGE	6	22	WM-JJ-CFS23/1-JJG	Jelly Jar Wall Mounted Compact Fluorescent, spiral, (1) 23W lamp Glass Jelly Jar	6	12	LEDS/A LEDS12/1	Wall Mounted Install LED Screw-in A-Style Lamp Light Emitting Diode Lamp, Screw-in, (1) 12W lamp	2200	CLASS	0.131	0.072	288.42	158.40
113	SCHEWALM STUDENT CENTER	1ST FLOOR	STUDENT LOUNGE	3	14	PE-HH-CFS15/1-NL	High-Hat Pendant Mounted Compact Fluorescent, spiral, (1) 15W lamp (No Diffuser)	3	10	LEDS/BR30 LEDS10/1	Pendant Mounted Install LED Screw-in BR30 Lamp Light Emitting Diode Lamp, Screw-in, (1) 10W lamp	2200	CLASS	0.043	0.030	94.05	66.00
114	SCHEWALM STUDENT CENTER	1ST FLOOR	STUDENT LOUNGE	3	22	WM-JJ-CFS23/1-JJG	Jelly Jar Wall Mounted Compact Fluorescent, spiral, (1) 23W lamp Glass Jelly Jar	3	12	LEDS/A LEDS12/1	Wall Mounted Install LED Screw-in A-Style Lamp Light Emitting Diode Lamp, Screw-in, (1) 12W lamp	2200	CLASS	0.066	0.036	144.21	79.20
115	SCHEWALM STUDENT CENTER	BASEMENT	BASEMENT STUDENT LOUNGE	10	56	PE-IND4-F42ILL-ICE	4' Industrial Pendant Mounted Fluorescent, (2) 48", T-8 lamp, Instant Start Ballast, NLO (BF: .85-.95) Ice Tray Diffuser	10	30	LEDT8 LEDT8/4/15W/2	Pendant Mounted T8 LED Retrofit Lamp with External Driver LED 4' T8 Lamp (2) 15W Lamps	2200	CLASS	0.561	0.300	1233.10	660.00
116	SCHEWALM STUDENT CENTER	BASEMENT	MENS RESTROOM	2	56	PE-IND4-F42ILL-ICE	4' Industrial Pendant Mounted Fluorescent, (2) 48", T-8 lamp, Instant Start Ballast, NLO (BF: .85-.95) Ice Tray Diffuser	2	30	LEDT8 LEDT8/4/15W/2	Pendant Mounted T8 LED Retrofit Lamp with External Driver LED 4' T8 Lamp (2) 15W Lamps	2160	RESTROOM	0.112	0.060	242.14	129.60
117	SCHEWALM STUDENT CENTER	BASEMENT	WOMENS RESTROOM	2	56	PE-IND4-F42ILL-ICE	4' Industrial Pendant Mounted Fluorescent, (2) 48", T-8 lamp, Instant Start Ballast, NLO (BF: .85-.95) Ice Tray Diffuser	2	30	LEDT8 LEDT8/4/15W/2	Pendant Mounted T8 LED Retrofit Lamp with External Driver LED 4' T8 Lamp (2) 15W Lamps	2160	RESTROOM	0.112	0.060	242.14	129.60
118	HARTZELL BUILDING	1ST FLOOR	HALLWAY	14	68	R-1X4-F42EE-PR	1'x4' Troffer Recessed Fluorescent, (2) 48", ES lamp Prismatic Acrylic Diffuser	14	30	LEDT8 LEDT8/4/15W/2	Recessed T8 LED Retrofit Lamp with External Driver LED 4' T8 Lamp (2) 15W Lamps	2520	CORR	0.958	0.420	2413.15	1058.40
119	HARTZELL BUILDING	1ST FLOOR	HALLWAY	5	68	R-2X4-F42EE-PR	2'x4' Troffer Recessed Fluorescent, (2) 48", ES lamp Prismatic Acrylic Diffuser	5	30	LEDT8 LEDT8/4/15W/2	Recessed T8 LED Retrofit Lamp with External Driver LED 4' T8 Lamp (2) 15W Lamps	2520	CORR	0.342	0.150	861.84	378.00
120	HARTZELL BUILDING	1ST FLOOR	COMPUTER LAB	18	85	R-2X4-F43ILL-MC	2'x4' Troffer Recessed Fluorescent, (3) 48", T-8 lamp, Instant Start Ballast, NLO (BF: .85-.95) Microcell Diffuser	18	45	LEDT8 LEDT8/4/15W/3	Recessed T8 LED Retrofit Lamp with External Driver LED 4' T8 Lamp (3) 15W Lamps	2200	CLASS	1.522	0.810	3348.18	1782.00
121	HARTZELL BUILDING	1ST FLOOR	CONFERENCE ROOM	6	85	R-2X4-F43ILL-PR	2'x4' Troffer Recessed Fluorescent, (3) 48", T-8 lamp, Instant Start Ballast, NLO (BF: .85-.95) Prismatic Acrylic Diffuser	6	30	CK2x4 LEDT8/4/15W/2	Recessed Install 2x4 2-Lamp Centering Kit LED 4' T8 Lamp (2) 15W Lamps	2080	OFFICE	0.507	0.180	1055.18	374.40
122	HARTZELL BUILDING	1ST FLOOR	ADMISSIONS LOUNGE	9	68	R-2X4-F42EE-CLOUD	2'x4' Troffer Recessed Fluorescent, (2) 48", ES lamp White Plastic Cloud Diffuser	9	30	LEDT8 LEDT8/4/15W/2	Recessed T8 LED Retrofit Lamp with External Driver LED 4' T8 Lamp (2) 15W Lamps	2080	OFFICE	0.616	0.270	1280.45	561.60
123	HARTZELL BUILDING	1ST FLOOR	ADMISSIONS OFFICE	15	48	R-2X4-LED50W-PR	2'x4' Troffer Recessed LED Light Fixture. (1) 50W Prismatic Acrylic Diffuser	15	48	N/R NONE	Recessed No Retrofit. To remain as is.	2080	OFFICE	0.713	0.713	1482.00	1482.00
124	HARTZELL BUILDING	1ST FLOOR	CLASSROOM 107	6	137	R-2X4-F44EE-CLOUD	2'x4' Troffer Recessed Fluorescent, (4) 48", ES lamp White Plastic Cloud Diffuser	6	30	CK2x4 LEDT8/4/15W/2	Recessed Install 2x4 2-Lamp Centering Kit LED 4' T8 Lamp (2) 15W Lamps	2200	CLASS	0.821	0.180	1805.76	396.00
125	HARTZELL BUILDING	1ST FLOOR	CLASSROOM 106	6	137	R-2X4-F44EE-CLOUD	2'x4' Troffer Recessed Fluorescent, (4) 48", ES lamp White Plastic Cloud Diffuser	6	30	CK2x4 LEDT8/4/15W/2	Recessed Install 2x4 2-Lamp Centering Kit LED 4' T8 Lamp (2) 15W Lamps	2200	CLASS	0.821	0.180	1805.76	396.00
126	HARTZELL BUILDING	1ST FLOOR	OFFICE 105	4	137	R-2X4-F44EE-CLOUD	2'x4' Troffer Recessed Fluorescent, (4) 48", ES lamp White Plastic Cloud Diffuser	4	30	CK2x4 LEDT8/4/15W/2	Recessed Install 2x4 2-Lamp Centering Kit LED 4' T8 Lamp (2) 15W Lamps	2080	OFFICE	0.547	0.120	1138.18	249.60
127	HARTZELL BUILDING	1ST FLOOR	OFFICE 104	9	137	R-2X4-F44EE-CLOUD	2'x4' Troffer Recessed Fluorescent, (4) 48", ES lamp White Plastic Cloud Diffuser	9	30	CK2x4 LEDT8/4/15W/2	Recessed Install 2x4 2-Lamp Centering Kit LED 4' T8 Lamp (2) 15W Lamps	2080	OFFICE	1.231	0.270	2560.90	561.60
[illegible]	HARTZELL BUILDING	1ST FLOOR	CLASSROOM 103	9	137	R-2X4-F44EE-CLOUD	2'x4' Troffer Recessed Fluorescent, (4) 48", ES lamp White Plastic Cloud Diffuser	9	30	CK2x4 LEDT8/4/15W/2	Recessed Install 2x4 2-Lamp Centering Kit LED 4' T8 Lamp (2) 15W Lamps	2200	CLASS	1.231	0.270	2708.64	594.00
129	HARTZELL BUILDING	1ST FLOOR	OFFICE 102	4	137	R-2X4-F44EE-CLOUD	2'x4' Troffer Recessed Fluorescent, (4) 48", ES lamp White Plastic Cloud Diffuser	4	30	CK2x4 LEDT8/4/15W/2	Recessed Install 2x4 2-Lamp Centering Kit LED 4' T8 Lamp (2) 15W Lamps	2080	OFFICE	0.547	0.120	1138.18	249.60
130	HARTZELL BUILDING	1ST FLOOR	OFFICE 101	4	137	R-2X4-F44EE-CLOUD	2'x4' Troffer Recessed Fluorescent, (4) 48", ES lamp White Plastic Cloud Diffuser	4	30	CK2x4 LEDT8/4/15W/2	Recessed Install 2x4 2-Lamp Centering Kit LED 4' T8 Lamp (2) 15W Lamps	2080	OFFICE	0.547	0.120	1138.18	249.60
131	HARTZELL BUILDING	1ST FLOOR	MENS RESTROOM	2	68	FL-1X4-F42EE-PR	1'x4' Troffer Recessed Flanged Fluorescent, (2) 48", ES lamp Prismatic Acrylic Diffuser	2	30	LEDT8 LEDT8/4/15W/2	Recessed Flanged T8 LED Retrofit Lamp with External Driver LED 4' T8 Lamp (2) 15W Lamps	2160	RESTROOM	0.137	0.060	295.49	129.60
132	HARTZELL BUILDING	1ST FLOOR	WOMENS RESTROOM	1	68	FL-1X4-F42EE-PR	1'x4' Troffer Recessed Flanged Fluorescent, (2) 48", ES lamp Prismatic Acrylic Diffuser	1	30	LEDT8 LEDT8/4/15W/2	Recessed Flanged T8 LED Retrofit Lamp with External Driver LED 4' T8 Lamp (2) 15W Lamps	2160	RESTROOM	0.068	0.030	147.74	64.80
133	JONES DINING HALL	1ST FLOOR	ENTRY LOBBY	2	31	R-2X2-F22ILL-PR	2'x2' Troffer Recessed Fluorescent, (2) 24", T-8 lamp, Instant Start Ballast, NLO (BF: .85-.95) Prismatic Acrylic Diffuser	2	20	LEDT8 LEDT8/2/10W/2	Recessed T8 LED Retrofit Lamp with External Driver LED 2' T8 Lamp (2) 10W Lamps	2520	CORR	0.063	0.040	158.00	100.80
134	JONES DINING HALL	1ST FLOOR	HALLWAYS	22	31	R-2X2-F22ILL-PR	2'x2' Troffer Recessed Fluorescent, (2) 24", T-8 lamp, Instant Start Ballast, NLO (BF: .85-.95) Prismatic Acrylic Diffuser	22	20	LEDT8 LEDT8/2/10W/2	Recessed T8 LED Retrofit Lamp with External Driver LED 2' T8 Lamp (2) 10W Lamps	2520	CORR	0.690	0.440	1738.04	1108.80
135	JONES DINING HALL	1ST FLOOR	LARGE MEETING ROOM	16	137	R-2X4-F44EE-MC	2'x4' Troffer Recessed Fluorescent, (4) 48", ES lamp Microcell Diffuser	16	30	CK2x4 LEDT8/4/15W/2	Recessed Install 2x4 2-Lamp Centering Kit LED 4' T8 Lamp (2) 15W Lamps	2080	OFFICE	2.189	0.480	4552.70	998.40
136	JONES DINING HALL	1ST FLOOR	LARGE MEETING ROOM	40	22	R-REC/8-CFS23/1-NL	Recessed Can 8" Recessed Compact Fluorescent, spiral, (1) 23W lamp (No Diffuser)	40	10	LEDS/BR30 LEDS10/1	Recessed Install LED Screw-in BR30 Lamp Light Emitting Diode Lamp, Screw-in, (1) 10W lamp	2080	OFFICE	0.874	0.400	1817.92	832.00
137	JONES DINING HALL	1ST FLOOR	MENS RESTROOM	12	22	R-REC/10-CFS23/1-GFRR	Recessed Can 10" Recessed Compact Fluorescent spiral, (1) 23W lamp Round Glass Fresnel Lens	12	12	LEDS/A LEDS12/1	Recessed Install LED Screw-in A-Style Lamp Light Emitting Diode Lamp, Screw-in, (1) 12W lamp	2160	RESTROOM	0.262	0.144	566.35	311.04
138	JONES DINING HALL	1ST FLOOR	WOMENS RESTROOM	4	22	R-REC/10-CFS23/1-GFRR	Recessed Can 10" Recessed Compact Fluorescent, spiral, (1) 23W lamp Round Glass Fresnel Lens	4	12	LEDS/A LEDS12/1	Recessed Install LED Screw-in A-Style Lamp Light Emitting Diode Lamp, Screw-in, (1) 12W lamp	2160	RESTROOM	0.087	0.048	188.78	103.68
139	JONES DINING HALL	1ST FLOOR	DINING HALL OPEN AREA	56	85	PE-UD4-F43ILL-DI	4' Up/Down Light Pendant Mounted Fluorescent, (3) 48", T-8 lamp, Instant Start Ballast, NLO (BF: .85-.95) Direct/Indirect Shield	56	45	LEDT8 LEDT8/4/15W/3	Pendant Mounted T8 LED Retrofit Lamp with External Driver LED 4' T8 Lamp (3) 15W Lamps	2520	CORR	4.735	2.520	11931.70	6350.40
140	JONES DINING HALL	1ST FLOOR	DINING HALL OPEN AREA	14	22	R-REC/8-CFS23/1-NL	Recessed Can 8" Recessed Compact Fluorescent, spiral, (1) 23W lamp (No Diffuser)	14	10	LEDS/BR30 LEDS10/1	Recessed Install LED Screw-in BR30 Lamp Light Emitting Diode Lamp, Screw-in, (1) 10W lamp	2520	CORR	0.306	0.140	770.87	352.80
141	JONES DINING HALL	1ST FLOOR	SERVING LINE	6	56	FL-1X4-F42ILL-PR	1'x4' Troffer Recessed Flanged Fluorescent, (2) 48", T-8 lamp, Instant Start Ballast, NLO (BF: .85-.95) Prismatic Acrylic Diffuser	6	30	LEDT8 LEDT8/4/15W/2	Recessed Flanged T8 LED Retrofit Lamp with External Driver LED 4' T8 Lamp (2) 15W Lamps	3640	KITCHEN	0.336	0.180	1224.13	655.20
142	JONES DINING HALL	1ST FLOOR	KITCHEN	20	56	FL-2X4-F42ILL-PR	2'x4' Troffer Recessed Flanged Fluorescent, (2) 48", T-8 lamp, Instant Start Ballast, NLO (BF: .85-.95) Prismatic Acrylic Diffuser	20	30	LEDT8 LEDT8/4/15W/2	Recessed Flanged T8 LED Retrofit Lamp with External Driver LED 4' T8 Lamp (2) 15W Lamps	3640	KITCHEN	1.121	0.600	4080.44	2184.00
143	JONES DINING HALL	1ST FLOOR	KITCHEN	5	56	S-1X4-F42ILL-PR	1'x4' Troffer Surface Mounted Fluorescent, (2) 48", T-8 lamp, Instant Start Ballast, NLO (BF: .85-.95) Prismatic Acrylic Diffuser	5	30	LEDT8 LEDT8/4/15W/2	Surface Mounted T8 LED Retrofit Lamp with External Driver LED 4' T8 Lamp (2) 15W Lamps	3640	KITCHEN	0.280	0.150	1020.11	546.00
144	JONES DINING HALL	1ST FLOOR	KITCHEN	4	22	R-REC/10-CFS23/1-GFRR	Recessed Can 10" Recessed Compact Fluorescent, spiral, (1) 23W lamp Round Glass Fresnel Lens	4	12	LEDS/A LEDS12/1	Recessed Install LED Screw-in A-Style Lamp Light Emitting Diode Lamp, Screw-in, (1) 12W lamp	3640	KITCHEN	0.087	0.048	318.14	174.72
145	JONES DINING HALL	1ST FLOOR	EXHAUST HOODS	10	22	S-JJ-CFS23/1-JJG	Jelly Jar Surface Mounted Compact Fluorescent, spiral, (1) 23W lamp Glass Jelly Jar	10	12	LEDS/A LEDS12/1	Surface Mounted Install LED Screw-in A-Style Lamp Light Emitting Diode Lamp, Screw-in, (1) 12W lamp	3640	KITCHEN	0.219	0.120	795.34	436.80
146	JONES DINING HALL	1ST FLOOR	DISHWASHING	10	56	FL-1X4-F42ILL-PR	1'x4' Troffer Recessed Flanged Fluorescent, (2) 48", T-8 lamp, Instant Start Ballast, NLO (BF: .85-.95) Prismatic Acrylic Diffuser	10	30	LEDT8 LEDT8/4/15W/2	Recessed Flanged T8 LED Retrofit Lamp with External Driver LED 4' T8 Lamp (2) 15W Lamps	3640	KITCHEN	0.561	0.300	2040.22	1092.00
147	JONES DINING HALL	1ST FLOOR	DISHWASHING	1	56	FL-1X4-F42ILL-PR	1'x4' Troffer Recessed Flanged Fluorescent, (2) 48", T-8 lamp, Instant Start Ballast, NLO (BF: .85-.95) Prismatic Acrylic Diffuser	1	30	LEDT8 LEDT8/4/15W/2	Recessed Flanged T8 LED Retrofit Lamp with External Driver LED 4' T8 Lamp (2) 15W Lamps	3640	KITCHEN	0.056	0.030	204.02	109.20
148	JONES DINING HALL	1ST FLOOR	MENS LOCKER ROOM	1	56	S-1X4-F42ILL-PR	1'x4' Troffer Surface Mounted Fluorescent, (2) 48", T-8 lamp, Instant Start Ballast, NLO (BF: .85-.95) Prismatic Acrylic Diffuser	1	30	LEDT8 LEDT8/4/15W/2	Surface Mounted T8 LED Retrofit Lamp with External Driver LED 4' T8 Lamp (2) 15W Lamps	1800	LOCKER	0.056	0.030	100.89	54.00
149	JONES DINING HALL	1ST FLOOR	MENS LOCKER ROOM	1	22	R-REC/10-CFS23/1-GFRR	Recessed Can 10" Recessed Compact Fluorescent, spiral, (1) 23W lamp Round Glass Fresnel Lens	1	12	LEDS/A LEDS12/1	Recessed Install LED Screw-in A-Style Lamp Light Emitting Diode Lamp, Screw-in, (1) 12W lamp	1800	LOCKER	0.022	0.012	39.33	21.60
150	JONES DINING HALL	1ST FLOOR	WOMENS LOCKER ROOM	1	56	S-1X4-F42ILL-PR	1'x4' Troffer Surface Mounted Fluorescent, (2) 48", T-8 lamp, Instant Start Ballast, NLO (BF: .85-.95) Prismatic Acrylic Diffuser	1	30	LEDT8 LEDT8/4/15W/2	Surface Mounted T8 LED Retrofit Lamp with External Driver LED 4' T8 Lamp (2) 15W Lamps	1800	LOCKER	0.056	0.030	100.89	54.00
151	JONES DINING HALL	1ST FLOOR	WOMENS LOCKER ROOM	1	22	R-REC/10-CFS23/1-GFRR	Recessed Can 10" Recessed Compact Fluorescent, spiral, (1) 23W lamp Round Glass Fresnel Lens	1	12	LEDS/A LEDS12/1	Recessed Install LED Screw-in A-Style Lamp Light Emitting Diode Lamp, Screw-in, (1) 12W lamp	1800	LOCKER	0.022	0.012	39.33	21.60
[illegible]	MAINTENANCE FACILITIES BUILDING	1ST FLOOR	DIRECTOR OF CONSTRUCTION OFFICE	2	48	R-2X4-LED50W-PR	2'x4' Troffer Recessed LED Light Fixture. (1) 50W Prismatic Acrylic Diffuser	2	48	N/R NONE	Recessed No Retrofit. To remain as is.	2080	OFFICE	0.095	0.095	197.60	197.60
153	MAINTENANCE FACILITIES BUILDING	1ST FLOOR	OPEN GARAGE SHOP	6	106	CH-W4-F44ILL-W	4' Wraparound Chain Mounted Fluorescent, (4) 48", T-8 lamp, Instant Start Ballast, NLO (BF: .85-.95) Acrylic Wrap-Around Diffuser	6	60	LEDT8 LEDT8/4/15W/4	Chain Mounted T8 LED Retrofit Lamp with External Driver LED 4' T8 Lamp (4) 15W Lamps	2200	CLASS	0.638	0.360	1404.48	792.00
154	MAINTENANCE FACILITIES BUILDING	1ST FLOOR	OPEN GARAGE SHOP	2	106	CH-W4-F44ILL-W	4' Wraparound Chain Mounted Fluorescent, (4) 48", T-8 lamp, Instant Start Ballast, NLO (BF: .85-.95) Acrylic Wrap-Around Diffuser	2	60	LEDT8 LEDT8/4/15W/4	Chain Mounted T8 LED Retrofit Lamp with External Driver LED 4' T8 Lamp (4) 15W Lamps	2200	CLASS	0.213	0.120	468.16	264.00

Line #	Facility	Area	Space	Pre Fixture Qty	Pre Wattage	Pre Code	Pre Description	Post Fixture Qty	Post Wattage	Post Code	Post Description	Hours Pre	Hours Code	Base kW	Retro Proposed kW	Base kWh	Retro Proposed kWh
155	MAINTENANCE FACILITIES BUILDING	1ST FLOOR	OPEN GARAGE SHOP	2	56	CH-IND4-F42ILL-NL	4' Industrial Chain Mounted Fluorescent, (2) 48", T-8 lamp, Instant Start Ballast. NLO (BF: .85-.95) (No Diffuser)	2	30	LEDT8 LEDT8/4/15W/2	Chain Mounted T8 LED Retrofit Lamp with External Driver LED 4' T8 Lamp (2) 15W Lamps	2200	CLASS	0.112	0.060	246.62	132.00
156	MAINTENANCE FACILITIES BUILDING	1ST FLOOR	SHOP OFFICE	3	65	S-2X4-F43ILL-PR	2'x4' Troffer Surface Mounted Fluorescent, (3) 48", T-8 lamp, Instant Start Ballast. NLO (BF: .85-.95) Prismatic Acrylic Diffuser	3	30	CK2x4 LEDT8/4/15W/2	Surface Mounted Install 2x4 2-Lamp Centering Kit LED 4' T8 Lamp (2) 15W Lamps	2080	OFFICE	0.254	0.090	527.59	187.20
157	MAINTENANCE FACILITIES BUILDING	1ST FLOOR	RESTROOM	3	95	PE-HH-I100/1-NL	High-Hat Pendant Mounted Incandescent, (1) 100W lamp (No Diffuser)	3	10	LEDSI/BR30 LEDS10/1	Pendant Mounted Install LED Screw-in BR30 Lamp Light Emitting Diode Lamp, Screw-in, (1) 10W lamp	2160	RESTROOM	0.285	0.030	615.60	64.[illegible]
158	MAINTENANCE FACILITIES BUILDING	1ST FLOOR	WAREHOUSE OPEN AREA	16	106	CH-W4-F44ILL-W	4' Wraparound Chain Mounted Fluorescent, (4) 48", T-8 lamp, Instant Start Ballast. NLO (BF: .85-.95) Acrylic Wrap-Around Diffuser	16	30	CKW42 LEDT8/4/15W/2	Chain Mounted Install 4' Wrap Centering Kit LED 4' T8 Lamp (2) 15W Lamps	2080	OFFICE	1.702	0.480	3540.99	998.40
159	MAINTENANCE FACILITIES BUILDING	BASEMENT	MECHANICAL ROOM	9	280	PE-HB-MH250/1-PR	High-Bay Pendant Mounted Metal Halide. (1) 250W lamp Prismatic Acrylic Diffuser	9	54	LEDSI/COB LEDS54/1	Pendant Mounted Chip On Board (COB) Type Screw-in / Bypass Existing Ballast Light Emitting Diode Lamp, Screw-in, (1) 54W lamp - HIGH	1040	STORAGE	2.522	0.486	2623.14	505.44
160	MAINTENANCE FACILITIES BUILDING	BASEMENT	CONTROLS ROOM	2	106	R-2X4-F44ILL-PR	2'x4' Troffer Recessed Fluorescent, (4) 48", T-8 lamp, Instant Start Ballast. NLO (BF: .85-.95) Prismatic Acrylic Diffuser	2	30	CK2x4 LEDT8/4/15W/2	Recessed Install 2x4 2-Lamp Centering Kit LED 4' T8 Lamp (2) 15W Lamps	540	STORAGE	0.213	0.060	114.91	32.40
161	MAINTENANCE FACILITIES BUILDING	BASEMENT	MECHANICAL ROOM	2	22	PE-HH-CFS23/1-NL	High-Hat Pendant Mounted Compact Fluorescent, spiral, (1) 23W lamp (No Diffuser)	2	22	N/R NONE	Pendant Mounted No Retrofit To remain as is.	540	STORAGE	0.044	0.044	23.60	23.60
162	TOM HENCE BUILDING - COLLEGE STORE	1ST FLOOR	COLLEGE STORE	8	106	R-2X4-F44ILL-MC	2'x4' Troffer Recessed Fluorescent, (4) 48", T-8 lamp, Instant Start Ballast. NLO (BF: .85-.95) Microcell Diffuser	8	30	CK2x4 LEDT8/4/15W/2	Recessed Install 2x4 2-Lamp Centering Kit LED 4' T8 Lamp (2) 15W Lamps	2080	OFFICE	0.851	0.240	1770.50	499.20
163	TOM HENCE BUILDING - COLLEGE STORE	1ST FLOOR	OFFICE	2	56	R-2X4-F42ILL-PR	2'x4' Troffer Recessed Fluorescent, (2) 48", T-8 lamp, Instant Start Ballast. NLO (BF: .85-.95) Prismatic Acrylic Diffuser	2	30	CK2x4 LEDT8/4/15W/2	Recessed Install 2x4 2-Lamp Centering Kit LED 4' T8 Lamp (2) 15W Lamps	2080	OFFICE	0.112	0.060	233.17	124.80
164	TOM HENCE BUILDING - COLLEGE STORE	1ST FLOOR	LOBBY AREA	3	106	R-2X4-F44ILL-MC	2'x4' Troffer Recessed Fluorescent, (4) 48", T-8 lamp, Instant Start Ballast. NLO (BF: .85-.95) Microcell Diffuser	3	30	CK2x4 LEDT8/4/15W/2	Recessed Install 2x4 2-Lamp Centering Kit LED 4' T8 Lamp (2) 15W Lamps	2520	CORR	0.319	0.090	804.38	226.80
165	TOM HENCE BUILDING - COLLEGE STORE	1ST FLOOR	LOBBY AREA	4	57	PE-DECO-I60/1-SC	Decorative Type Foture Pendant Mounted Incandescent, (1) 60W lamp Styled/Custom Diffuser	4	11	LEDSI/A LEDS11/1	Pendant Mounted Install LED Screw-in A-Style Lamp Light Emitting Diode Lamp, Screw-in, (1) 11W lamp	2520	CORR	0.228	0.044	574.56	110.88
166	TOM HENCE BUILDING - COLLEGE STORE	1ST FLOOR	LOBBY AREA	2	57	S-TABLE-I60/1-SC	Table Lamp Surface Mounted Incandescent, (1) 60W lamp Styled/Custom Diffuser	2	11	LEDSI/A LEDS11/1	Surface Mounted Install LED Screw-in A-Style Lamp Light Emitting Diode Lamp, Screw-in, (1) 11W lamp	2520	CORR	0.114	0.022	287.28	55.44
167	TOM HENCE BUILDING - COLLEGE STORE	1ST FLOOR	LOBBY AREA	4	22	R-REC/6-CFS23/1-NL	Recessed Can 6" Recessed Compact Fluorescent, spiral, (1) 23W lamp (No Diffuser)	4	10	LEDSI/A LEDS10/1	Recessed Install LED Screw-in A-Style Lamp Light Emitting Diode Lamp, Screw-in, (1) 10W lamp	2520	CORR	0.087	0.040	220.25	100.80
168	TOM HENCE BUILDING - COLLEGE STORE	1ST FLOOR	OFFICE	4	62	R-REC/6-I65/1-NL	Recessed Can 6" Recessed Incandescent, (1) 65W lamp (No Diffuser)	4	10	LEDSI/A LEDS10/1	Recessed Install LED Screw-in A-Style Lamp Light Emitting Diode Lamp, Screw-in, (1) 10W lamp	2080	OFFICE	0.247	0.040	513.76	83.20
169	TOM HENCE BUILDING - COLLEGE STORE	1ST FLOOR	OFFICE	1	43	S-CFAN-CFS15/3-GLOBE	Ceiling Fan Surface Mounted Compact Fluorescent, spiral, (3) 15W lamp Globe Diffuser	1	33	LEDSI/A LEDS11/3	Surface Mounted Install LED Screw-in A-Style Lamp Light Emitting Diode Lamp, Screw-in, (3) 11W lamp	2080	OFFICE	0.043	0.033	88.92	68.64
170	TOM HENCE BUILDING - COLLEGE STORE	1ST FLOOR	CONFERENCE ROOM	4	56	R-2X2-FU2ILL-6"-MC	2'x2' Troffer Recessed Fluorescent, (2) U-Tube, T-8 lamp, Instant Start Ballast Microcell Diffuser	4	20	CK2x2 LEDT8/2/10W/2	Recessed Install 2x2 2-Lamp Centering Kit LED 2' T8 Lamp (2) 10W Lamps	2080	OFFICE	0.224	0.080	466.34	166.40
171	TOM HENCE BUILDING - COLLEGE STORE	1ST FLOOR	CONFERENCE ROOM	1	14	S-CFAN-CFS15/1-GLOBE	Ceiling Fan Surface Mounted Compact Fluorescent, spiral, (1) 15W lamp Globe Diffuser	1	11	LEDSI/A LEDS11/1	Surface Mounted Install LED Screw-in A-Style Lamp Light Emitting Diode Lamp, Screw-in, (1) 11W lamp	2080	OFFICE	0.014	0.011	29.64	22.88
172	TOM HENCE BUILDING - COLLEGE STORE	1ST FLOOR	KITCHENETTE	2	22	S-REC/6-CFS23/1-NL	Recessed Can 6" Surface Mounted Compact Fluorescent, spiral, (1) 23W lamp (No Diffuser)	2	10	LEDSI/A LEDS10/1	Surface Mounted Install LED Screw-in A-Style Lamp Light Emitting Diode Lamp, Screw-in, (1) 10W lamp	2080	OFFICE	0.044	0.020	90.90	41.60
173	TOM HENCE BUILDING - COLLEGE STORE	1ST FLOOR	RESTROOM	2	14	M-SCONCE-DECO-CFS15/1-S	Decorative Wall Sconce Wall Mounted Compact Fluorescent, spiral, (1) 15W lamp Styled/Custom Diffuser	2	11	LEDSI/A LEDS11/1	Wall Mounted Install LED Screw-in A-Style Lamp Light Emitting Diode Lamp, Screw-in, (1) 11W lamp	2160	RESTROOM	0.029	0.022	61.56	47.52
174	TOM HENCE BUILDING - COLLEGE STORE	1ST FLOOR	RESTROOM	1	14	S-BFAN-CFS15/1-MW	Bathroom Light with Fan Surface Mounted Compact Fluorescent, spiral, (1) 15W lamp Mlk-White Plastic Diffuser	1	11	LEDSI/A LEDS11/1	Surface Mounted Install LED Screw-in A-Style Lamp Light Emitting Diode Lamp, Screw-in, (1) 11W lamp	2160	RESTROOM	0.014	0.011	30.78	23.76
175	TOM HENCE BUILDING - COLLEGE STORE	2ND FLOOR	CONFERENCE ROOM	16	22	R-REC/6-CFS23/1-NL	Recessed Can 6" Recessed Compact Fluorescent, spiral, (1) 23W lamp (No Diffuser)	16	10	LEDSI/A LEDS10/1	Recessed Install LED Screw-in A-Style Lamp Light Emitting Diode Lamp, Screw-in, (1) 10W lamp	2080	OFFICE	0.350	0.160	727.17	332.80
176	TOM HENCE BUILDING - COLLEGE STORE	2ND FLOOR	KITCHENETTE	2	22	R-REC/6-CFS23/1-NL	Recessed Can 6" Recessed Compact Fluorescent, spiral, (1) 23W lamp (No Diffuser)	2	10	LEDSI/A LEDS10/1	Recessed Install LED Screw-in A-Style Lamp Light Emitting Diode Lamp, Screw-in (1) 10W lamp	2080	OFFICE	0.044	0.020	90.90	41.60
177	TOM HENCE BUILDING - COLLEGE STORE	2ND FLOOR	WORK AREA	3	68	S-W4-F42EE-W	4' Wraparound Surface Mounted Fluorescent, (2) 48", ES lamp Acrylic Wrap-Around Diffuser	3	30	CKW42 LEDT8/4/15W/2	Surface Mounted Install 4' Wrap Centering Kit LED 4' T8 Lamp (2) 15W Lamps	540	STORAGE	0.205	0.090	110.81	48.60
178	TOM HENCE BUILDING - COLLEGE STORE	2ND FLOOR	WOMENS RESTROOM	2	14	M-SCONCE-DECO-CFS15/1-S	Decorative Wall Sconce Wall Mounted Compact Fluorescent, spiral, (1) 15W lamp Styled/Custom Diffuser	2	11	LEDSI/A LEDS11/1	Wall Mounted Install LED Screw-in A-Style Lamp Light Emitting Diode Lamp, Screw-in, (1) 11W lamp	2160	RESTROOM	0.029	0.022	61.56	47.52
179	TOM HENCE BUILDING - COLLEGE STORE	2ND FLOOR	WOMENS RESTROOM	1	14	S-BFAN-CFS15/1-MW	Bathroom Light with Fan Surface Mounted Compact Fluorescent, spiral, (1) 15W lamp Mlk-White Plastic Diffuser	1	11	LEDSI/A LEDS11/1	Surface Mounted Install LED Screw-in A-Style Lamp Light Emitting Diode Lamp, Screw-in, (1) 11W lamp	2160	RESTROOM	0.014	0.011	30.78	23.76
180	TOM HENCE BUILDING - COLLEGE STORE	2ND FLOOR	MENS RESTROOM	2	14	M-SCONCE-DECO-CFS15/1-S	Decorative Wall Sconce Wall Mounted Compact Fluorescent, spiral, (1) 15W lamp Styled/Custom Diffuser	2	11	LEDSI/A LEDS11/1	Wall Mounted Install LED Screw-in A-Style Lamp Light Emitting Diode Lamp, Screw-in, (1) 11W lamp	2160	RESTROOM	0.029	0.022	61.56	47.[illegible]
181	TOM HENCE BUILDING - COLLEGE STORE	2ND FLOOR	MENS RESTROOM	1	14	S-BFAN-CFS15/1-MW	Bathroom Light with Fan Surface Mounted Compact Fluorescent, spiral, (1) 15W lamp Mlk-White Plastic Diffuser	1	11	LEDSI/A LEDS11/1	Surface Mounted Install LED Screw-in A-Style Lamp Light Emitting Diode Lamp, Screw-in, (1) 11W lamp	2160	RESTROOM	0.014	0.011	30.78	23.76
182	TOM HENCE BUILDING - COLLEGE STORE	2ND FLOOR	OPEN UPPER LOUNGE AREA	17	22	R-REC/6-CFS23/1-NL	Recessed Can 6" Recessed Compact Fluorescent, spiral, (1) 23W lamp (No Diffuser)	17	10	LEDSI/A LEDS10/1	Recessed Install LED Screw-in A-Style Lamp Light Emitting Diode Lamp, Screw-in, (1) 10W lamp	2200	CLASS	0.371	0.170	817.19	374.00
183	MULTIPURPOSE ACTIVITY CENTER	1ST FLOOR	MAIN GYMNASIUM	60	280	PE-HB-MH250/1-PR	High-Bay Pendant Mounted Metal Halide, (1) 250W lamp Prismatic Acrylic Diffuser	60	100	HB LED100W	Pendant Mounted High-Bay LED Light Fixture. (1) 100W - HIGH	3640	GYM	16.815	6.000	61206.60	21840.00
184	MULTIPURPOSE ACTIVITY CENTER	1ST FLOOR	MAIN GYMNASIUM	11	181	PE-CYLINDER-MH150/1-NL	Cylinder Fixture Pendant Mounted Metal Halide, (1) 150W lamp (No Diffuser)	11	27	LEDSI/COB LEDS27/1	Pendant Mounted Chip On Board (COB) Type Screw-in / Bypass Existing Ballast Light Emitting Diode Lamp, Screw-in, (1) 27W lamp	3640	GYM	1.886	0.297	7227.22	1081.08
185	MULTIPURPOSE ACTIVITY CENTER	1ST FLOOR	UPPER WALKWAY TRACK	30	90	PE-CYLINDER-MH70/1-NL	Cylinder Fixture Pendant Mounted Metal Halide, (1) 70W lamp (No Diffuser)	30	16	LEDSI/COB LEDS16/1	Pendant Mounted Chip On Board (COB) Type Screw-in / Bypass Existing Ballast Light Emitting Diode Lamp, Screw-in, (1) 16W lamp	3640	GYM	2.708	0.480	9855.30	1747.20
186	MULTIPURPOSE ACTIVITY CENTER	1ST FLOOR	MAIN LOBBY	16	475	WM-WP-H500/1-FGL	Wall-Pack Wall Mounted Halogen Incandescent, (1) 500W lamp Flat Glass Lens	16	50	WP LED50W	Wall Mounted Wall-Pack LED Light Fixture. (1) 50W	2520	CORR	7.600	0.800	19152.00	2016.00
187	MULTIPURPOSE ACTIVITY CENTER	1ST FLOOR	MAIN LOBBY	8	63	WM-HH-CFQ26/2-JJG	High-Hat Wall Mounted Compact Fluorescent, quad, (2) 26W lamp Glass Jelly Jar	8	63	N/R NONE	Wall Mounted No Retrofit. To remain as is.	2520	CORR	0.502	0.502	1264.03	1264.03
188	MULTIPURPOSE ACTIVITY CENTER	1ST FLOOR	MAIN LOBBY	9	63	R-REC/8-CFQ26/2-NL	Recessed Can 8" Recessed Compact Fluorescent, quad, (2) 26W lamp (No Diffuser)	9	63	N/R NONE	Recessed No Retrofit. To remain as is.	2520	CORR	0.564	0.564	1422.04	1422.04
189	MULTIPURPOSE ACTIVITY CENTER	1ST FLOOR	MAIN LOBBY	4	25	R-REC/8-LED26W-NL	Recessed Can 8" Recessed LED Light Fixture. (1) 26W (No Diffuser)	4	25	N/R NONE	Recessed No Retrofit To remain as is.	2520	CORR	0.099	0.099	248.98	248.98
190	MULTIPURPOSE ACTIVITY CENTER	1ST FLOOR	MAIN LOBBY	2	86	R-REC/8-I90/1-NL	Recessed Can 8" Recessed Incandescent, (1) 90W lamp (No Diffuser)	2	10	LEDSI/A LEDS10/1	Recessed Install LED Screw-in A-Style Lamp Light Emitting Diode Lamp, Screw-in, (1) 10W lamp	2520	CORR	0.171	0.020	430.92	50.40
191	MULTIPURPOSE ACTIVITY CENTER	1ST FLOOR	MAIN LOBBY (DISPLAY CASES)	4	29	S-S4-F41ILL-NL	4' Strip Surface Mounted Fluorescent, (1) 48", T-8 lamp, Instant Start Ballast. NLO (BF: .85-.95) (No Diffuser)	4	15	LEDT8 LEDT8/4/15W/1	Surface Mounted T8 LED Retrofit Lamp with External Driver LED 4' T8 Lamp (1) 15W Lamp	2520	CORR	0.118	0.060	296.86	151.20
192	MULTIPURPOSE ACTIVITY CENTER	1ST FLOOR	SECURITY OFFICE	2	85	R-2X4-F43ILL-DCP	2'x4' Troffer Recessed Fluorescent, (3) 48", T-8 lamp, Instant Start Ballast. NLO (BF: .85-.95) Deep Cell Parabolic Diffuser	2	45	LEDT8 LEDT8/4/15W/3	Recessed T8 LED Retrofit Lamp with External Driver LED 4' T8 Lamp (3) 15W Lamps	2080	OFFICE	0.169	0.090	351.73	187.20
193	MULTIPURPOSE ACTIVITY CENTER	2ND FLOOR	LARGE FITNESS CENTER	20	280	PE-HB-MH250/1-PR	High-Bay Pendant Mounted Metal Halide, (1) 250W lamp Prismatic Acrylic Diffuser	20	100	HB LED100W	Pendant Mounted High-Bay LED Light Fixture. (1) 100W - HIGH	3640	GYM	5.605	2.000	20402.20	7280.00
194	MULTIPURPOSE ACTIVITY CENTER	2ND FLOOR	RACQUETBALL COURT 1	12	166	FL-2X4-F46ILL-PR	2'x4' Troffer Recessed Flanged Fluorescent, (6) 48", T-8 lamp, Instant Start Ballast. NLO (BF: .85-.95) Prismatic Acrylic Diffuser	12	90	LEDT8 LEDT8/4/15W/6	Recessed Flanged T8 LED Retrofit Lamp with External Driver LED 4' T8 Lamp (6) 15W Lamps	3640	GYM	1.995	1.080	7261.80	3931.20
195	MULTIPURPOSE ACTIVITY CENTER	2ND FLOOR	RACQUETBALL COURT 2	12	166	FL-2X4-F46ILL-PR	2'x4' Troffer Recessed Flanged Fluorescent, (6) 48", T-8 lamp, Instant Start Ballast. NLO (BF: .85-.95) Prismatic Acrylic Diffuser	12	90	LEDT8 LEDT8/4/15W/6	Recessed Flanged T8 LED Retrofit Lamp with External Driver LED 4' T8 Lamp (6) 15W Lamps	3640	GYM	1.995	1.080	7261.80	3931.20
196	MULTIPURPOSE ACTIVITY CENTER	2ND FLOOR	BUILDING MANAGER OFFICE	3	58	R-2X4-F42ILL-MC	2'x4' Troffer Recessed Fluorescent, (2) 48", T-8 lamp, Instant Start Ballast. NLO (BF: .85-.95) Microcell Diffuser	3	30	CK2x4 LEDT8/4/15W/2	Recessed Install 2x4 2-Lamp Centering Kit LED 4' T8 Lamp (2) 15W Lamps	2080	OFFICE	0.168	0.090	349.75	187.20
197	MULTIPURPOSE ACTIVITY CENTER	1ST FLOOR	LOCKER AREA HALLWAY	4	45	R-2X2-F23ILL-PR	2'x2' Troffer Recessed Fluorescent, (3) 24", T-8 lamp, Instant Start Ballast. NLO (BF: .85-.95) Prismatic Acrylic Diffuser	4	20	LEDT8 LEDT8/2/10W/2	Recessed T8 LED Retrofit Lamp with External Driver LED 2' T8 Lamp (2) 10W Lamps	2520	CORR	0.179	0.080	450.07	201.60
198	MULTIPURPOSE ACTIVITY CENTER	1ST FLOOR	WOMENS OFFICIALS LOCKER ROOM	6	85	R-2X4-F43ILL-PR	2'x4' Troffer Recessed Fluorescent, (3) 48", T-8 lamp, Instant Start Ballast. NLO (BF: .85-.95) Prismatic Acrylic Diffuser	6	30	CK2x4 LEDT8/4/15W/2	Recessed Install 2x4 2-Lamp Centering Kit LED 4' T8 Lamp (2) 15W Lamps	1800	LOCKER	0.507	0.180	913.14	324.00
199	MULTIPURPOSE ACTIVITY CENTER	1ST FLOOR	HALLWAY	12	45	R-2X2-F23ILL-PR	2'x2' Troffer Recessed Fluorescent, (3) 24", T-8 lamp, Instant Start Ballast. NLO (BF: .85-.95) Prismatic Acrylic Diffuser	12	20	LEDT8 LEDT8/2/10W/2	Recessed T8 LED Retrofit Lamp with External Driver LED 2' T8 Lamp (2) 10W Lamps	2520	CORR	0.536	0.240	1350.22	604.80
200	MULTIPURPOSE ACTIVITY CENTER	1ST FLOOR	TRAINERS ROOM 121	1	45	R-2X2-F23ILL-PR	2'x2' Troffer Recessed Fluorescent, (3) 24", T-8 lamp, Instant Start Ballast. NLO (BF: .85-.95) Prismatic Acrylic Diffuser	1	20	LEDT8 LEDT8/2/10W/2	Recessed T8 LED Retrofit Lamp with External Driver LED 2' T8 Lamp (2) 10W Lamps	2080	OFFICE	0.045	0.020	92.87	41.60
201	MULTIPURPOSE ACTIVITY CENTER	1ST FLOOR	TRAINERS ROOM 121	8	85	R-2X4-F43ILL-PR	2'x4' Troffer Recessed Fluorescent, (3) 48", T-8 lamp, Instant Start Ballast. NLO (BF: .85-.95) Prismatic Acrylic Diffuser	8	30	CK2x4 LEDT8/4/15W/2	Recessed Install 2x4 2-Lamp Centering Kit LED 4' T8 Lamp (2) 15W Lamps	2080	OFFICE	0.676	0.240	1406.91	499.20
202	MULTIPURPOSE ACTIVITY CENTER	1ST FLOOR	MENS OFFICIALS LOCKER ROOM	6	85	R-2X4-F43ILL-PR	2'x4' Troffer Recessed Fluorescent, (3) 48", T-8 lamp, Instant Start Ballast. NLO (BF: .85-.95) Prismatic Acrylic Diffuser	6	30	CK2x4 LEDT8/4/15W/2	Recessed Install 2x4 2-Lamp Centering Kit LED 4' T8 Lamp (2) 15W Lamps	1800	LOCKER	0.507	0.180	913.14	324.00
203	MULTIPURPOSE ACTIVITY CENTER	1ST FLOOR	WOMENS TEAM ROOM	5	85	S-2X4-F43ILL-PR	2'x4' Troffer Surface Mounted Fluorescent, (3) 48", T-8 lamp, Instant Start Ballast. NLO (BF: .85-.95) Prismatic Acrylic Diffuser	5	30	CK2x4 LEDT8/4/15W/2	Surface Mounted Install 2x4 2-Lamp Centering Kit LED 4' T8 Lamp (2) 15W Lamps	1800	LOCKER	0.423	0.150	760.95	270.00
204	MULTIPURPOSE ACTIVITY CENTER	1ST FLOOR	WOMENS TEAM ROOM	7	63	R-REC/8-CFQ26/2-GFRR	Recessed Can 8" Recessed Compact Fluorescent, quad, (2) 26W lamp Round Glass Fresnel Lens	7	63	N/R NONE	Recessed No Retrofit To remain as is.	1800	LOCKER	0.439	0.439	790.02	790.[illegible]
205	MULTIPURPOSE ACTIVITY CENTER	1ST FLOOR	WOMENS TEAM ROOM STORAGE AREA	3	85	S-2X4-F43ILL-PR	2'x4' Troffer Surface Mounted Fluorescent, (3) 48", T-8 lamp, Instant Start Ballast. NLO (BF: .85-.95) Prismatic Acrylic Diffuser	3	30	CK2x4 LEDT8/4/15W/2	Surface Mounted Install 2x4 2-Lamp Centering Kit LED 4' T8 Lamp (2) 15W Lamps	540	STORAGE	0.254	0.090	136.97	48.60
206	MULTIPURPOSE ACTIVITY CENTER	1ST FLOOR	MENS TEAM ROOM	5	85	S-2X4-F43ILL-PR	2'x4' Troffer Surface Mounted Fluorescent, (3) 48", T-8 lamp, Instant Start Ballast. NLO (BF: .85-.95) Prismatic Acrylic Diffuser	5	30	CK2x4 LEDT8/4/15W/2	Surface Mounted Install 2x4 2-Lamp Centering Kit LED 4' T8 Lamp (2) 15W Lamps	1800	LOCKER	0.423	0.150	760.95	270.00

Line #	Facility	Area	Space	Pre Fixture Qty	Pre Wattage	Pre Code	Pre Description	Post Fixture Qty	Post Wattage	Post Code	Post Description	Hours Pre	Hours Code	Base kW	Retro Proposed kW	Base kWh	Retro Proposed kWh
207	MULTIPURPOSE ACTIVITY CENTER	1ST FLOOR	MENS TEAM ROOM	7	63	R-REC/8-CFQ26/2-GFRR	Recessed Can 8" Recessed Compact Fluorescent, quad, (2) 26W lamp Round Glass Fresnel Lens	7	63	N/R NONE	Recessed No Retrofit. To remain as is.	1800	LOCKER	0.439	0.439	790.02	790.02
2	MULTIPURPOSE ACTIVITY CENTER	1ST FLOOR	MENS TEAM ROOM STORAGE	3	85	S-2X4-F43ILL-PR	2'x4' Troffer Surface Mounted Fluorescent, (3) 48", T-8 lamp, Instant Start Ballast, NLO (BF: .85-.95) Prismatic Acrylic Diffuser	3	30	CK2x4 LEDT8/4/15W/2	Surface Mounted Install 2x4 2-Lamp Centering Kit LED 4' T8 Lamp (2) 15W Lamps	540	STORAGE	0.254	0.090	135.97	48.60
2	MULTIPURPOSE ACTIVITY CENTER	1ST FLOOR	HALLWAY OUTSIDE MENS TEAM ROOM	3	85	S-2X4-F43ILL-PR	2'x4' Troffer Surface Mounted Fluorescent, (3) 48", T-8 lamp, Instant Start Ballast, NLO (BF: .85-.95) Prismatic Acrylic Diffuser	3	30	CK2x4 LEDT8/4/15W/2	Surface Mounted Install 2x4 2-Lamp Centering Kit LED 4' T8 Lamp (2) 15W Lamps	2520	CORR	0.254	0.090	639.20	226.80
210	MULTIPURPOSE ACTIVITY CENTER	1ST FLOOR	MENS RESTROOM	11	56	R-S4-F42ILL-SL	4' Strip Recessed Fluorescent, (2) 48", T-8 lamp, Instant Start Ballast, NLO (BF: .85-.95) Slotted Metal Diffuser	11	30	LEDT8 LEDT8/4/15W/2	Recessed T8 LED Retrofit Lamp with External Driver LED 4' T8 Lamp (2) 15W Lamps	2160	RESTROOM	0.617	0.330	1331.75	712.80
211	MULTIPURPOSE ACTIVITY CENTER	1ST FLOOR	MENS RESTROOM	4	63	R-REC/8-CFQ26/2-NL	Recessed Can 8" Recessed Compact Fluorescent, quad, (2) 26W lamp (No Diffuser)	4	63	N/R NONE	Recessed No Retrofit. To remain as is.	2160	RESTROOM	0.251	0.251	541.73	541.73
212	MULTIPURPOSE ACTIVITY CENTER	1ST FLOOR	WOMENS RESTROOM	18	56	R-S4-F42ILL-SL	4' Strip Recessed Fluorescent, (2) 48", T-8 lamp, Instant Start Ballast, NLO (BF: .85-.95) Slotted Metal Diffuser	18	30	LEDT8 LEDT8/4/15W/2	Recessed T8 LED Retrofit Lamp with External Driver LED 4' T8 Lamp (2) 15W Lamps	2160	RESTROOM	1.009	0.540	2179.22	1166.40
213	MULTIPURPOSE ACTIVITY CENTER	1ST FLOOR	WOMENS RESTROOM	5	63	R-REC/8-CFQ26/2-NL	Recessed Can 8" Recessed Compact Fluorescent, quad, (2) 26W lamp (No Diffuser)	5	63	N/R NONE	Recessed No Retrofit. To remain as is.	2160	RESTROOM	0.314	0.314	677.16	677.16
214	MULTIPURPOSE ACTIVITY CENTER	2ND FLOOR	HALLWAY	26	81	R-2X2-CFT40/2-DI	2'x2' Troffer Recessed Compact Fluorescent, twin, (2) 40W lamp Direct/Indirect Shield	26	27	2x2 LED27W	Recessed 2'x2' Troffer LED Light Fixture, (1) 27W	2520	CORR	2.100	0.702	5290.74	1769.04
215	MULTIPURPOSE ACTIVITY CENTER	2ND FLOOR	HALLWAY	4	63	WM-HH-CFQ26/2-JJG	High-Hat Wall Mounted Compact Fluorescent, quad, (2) 26W lamp Glass Jelly Jar	4	63	N/R NONE	Wall Mounted No Retrofit. To remain as is.	2520	CORR	0.251	0.251	632.02	632.02
216	MULTIPURPOSE ACTIVITY CENTER	2ND FLOOR	HALLWAY	4	63	R-REC/8-CFQ26/2-NL	Recessed Can 8" Recessed Compact Fluorescent, quad, (2) 26W lamp (No Diffuser)	4	63	N/R NONE	Recessed No Retrofit. To remain as is.	2520	CORR	0.251	0.251	632.02	632.02
217	MULTIPURPOSE ACTIVITY CENTER	2ND FLOOR	HALLWAY	4	475	WM-WP-H500/1-FGL	Wall-Pack Wall Mounted Halogen Incandescent, (1) 500W lamp Flat Glass Lens	4	50	WP LED50W	Wall Mounted Wall-Pack LED Light Fixture, (1) 50W	2520	CORR	1.900	0.200	4788.00	504.00
218	MULTIPURPOSE ACTIVITY CENTER	2ND FLOOR	MENS LOCKER ROOM	12	85	R-2X4-F43ILL-PR	2'x4' Troffer Recessed Fluorescent, (3) 48", T-8 lamp, Instant Start Ballast, NLO (BF: .85-.95) Prismatic Acrylic Diffuser	12	30	CK2x4 LEDT8/4/15W/2	Recessed Install 2x4 2-Lamp Centering Kit LED 4' T8 Lamp (2) 15W Lamps	1800	LOCKER	1.015	0.360	1826.28	648.00
219	MULTIPURPOSE ACTIVITY CENTER	2ND FLOOR	MENS LOCKER ROOM	2	45	R-2X2-F23ILL-PR	2'x2' Troffer Recessed Fluorescent, (3) 24", T-8 lamp, Instant Start Ballast, NLO (BF: .85-.95) Prismatic Acrylic Diffuser	2	20	LEDT8 LEDT8/2/10W/2	Recessed T8 LED Retrofit Lamp with External Driver LED 2' T8 Lamp (2) 10W Lamps	1800	LOCKER	0.089	0.040	160.74	72.00
220	MULTIPURPOSE ACTIVITY CENTER	2ND FLOOR	MENS LOCKER ROOM	2	85	FL-2X4-F43ILL-PR	2'x4' Troffer Recessed Flanged Fluorescent, (3) 48", T-8 lamp, Instant Start Ballast, NLO (BF: .85-.95) Prismatic Acrylic Diffuser	2	30	CK2x4 LEDT8/4/15W/2	Recessed Flanged Install 2x4 2-Lamp Centering Kit LED 4' T8 Lamp (2) 15W Lamps	1800	LOCKER	0.169	0.060	304.38	108.00
221	MULTIPURPOSE ACTIVITY CENTER	2ND FLOOR	MENS LOCKER ROOM	1	63	R-REC/8-CFQ26/2-GFRR	Recessed Can 8" Recessed Compact Fluorescent, quad, (2) 26W lamp Round Glass Fresnel Lens	1	63	N/R NONE	Recessed No Retrofit. To remain as is.	1800	LOCKER	0.063	0.063	112.86	112.86
222	MULTIPURPOSE ACTIVITY CENTER	2ND FLOOR	WOMENS LOCKER ROOM	12	85	R-2X4-F43ILL-PR	2'x4' Troffer Recessed Fluorescent, (3) 48", T-8 lamp, Instant Start Ballast, NLO (BF: .85-.95) Prismatic Acrylic Diffuser	12	30	CK2x4 LEDT8/4/15W/2	Recessed Install 2x4 2-Lamp Centering Kit LED 4' T8 Lamp (2) 15W Lamps	1800	LOCKER	1.015	0.360	1826.28	648.00
223	MULTIPURPOSE ACTIVITY CENTER	2ND FLOOR	WOMENS LOCKER ROOM	2	45	R-2X2-F23ILL-PR	2'x2' Troffer Recessed Fluorescent, (3) 24", T-8 lamp, Instant Start Ballast, NLO (BF: .85-.95) Prismatic Acrylic Diffuser	2	20	LEDT8 LEDT8/2/10W/2	Recessed T8 LED Retrofit Lamp with External Driver LED 2' T8 Lamp (2) 10W Lamps	1800	LOCKER	0.089	0.040	160.74	72.00
224	MULTIPURPOSE ACTIVITY CENTER	2ND FLOOR	WOMENS LOCKER ROOM	2	85	FL-2X4-F43ILL-PR	2'x4' Troffer Recessed Flanged Fluorescent, (3) 48", T-8 lamp, Instant Start Ballast NLO (BF: .85-.95) Prismatic Acrylic Diffuser	2	30	CK2x4 LEDT8/4/15W/2	Recessed Flanged Install 2x4 2-Lamp Centering Kit LED 4' T8 Lamp (2) 15W Lamps	1800	LOCKER	0.169	0.060	304.38	108.00
225	MULTIPURPOSE ACTIVITY CENTER	2ND FLOOR	WOMENS LOCKER ROOM	1	63	R-REC/8-CFQ26/2-GFRR	Recessed Can 8" Recessed Compact Fluorescent, quad, (2) 26W lamp Round Glass Fresnel Lens	1	63	N/R NONE	Recessed No Retrofit. To remain as is.	1800	LOCKER	0.063	0.063	112.86	112.86
226	MULTIPURPOSE ACTIVITY CENTER	2ND FLOOR	MENS STAFF LOCKER ROOM	12	85	R-2X4-F43ILL-PR	2'x4' Troffer Recessed Fluorescent, (3) 48", T-8 lamp, Instant Start Ballast, NLO (BF: .85-.95) Prismatic Acrylic Diffuser	12	30	CK2x4 LEDT8/4/15W/2	Recessed Install 2x4 2-Lamp Centering Kit LED 4' T8 Lamp (2) 15W Lamps	1800	LOCKER	1.015	0.360	1826.28	648.00
227	MULTIPURPOSE ACTIVITY CENTER	2ND FLOOR	MENS STAFF LOCKER ROOM	2	45	R-2X2-F23ILL-PR	2'x2' Troffer Recessed Fluorescent, (3) 24", T-8 lamp, Instant Start Ballast, NLO (BF: .85-.95) Prismatic Acrylic Diffuser	2	20	LEDT8 LEDT8/2/10W/2	Recessed T8 LED Retrofit Lamp with External Driver LED 2' T8 Lamp (2) 10W Lamps	1800	LOCKER	0.089	0.040	160.74	72.00
228	MULTIPURPOSE ACTIVITY CENTER	2ND FLOOR	MENS STAFF LOCKER ROOM	2	85	FL-2X4-F43ILL-PR	2'x4' Troffer Recessed Flanged Fluorescent, (3) 48", T-8 lamp, Instant Start Ballast, NLO (BF: .85-.95) Prismatic Acrylic Diffuser	2	30	CK2x4 LEDT8/4/15W/2	Recessed Flanged Install 2x4 2-Lamp Centering Kit LED 4' T8 Lamp (2) 15W Lamps	1800	LOCKER	0.169	0.060	304.38	108.00
229	MULTIPURPOSE ACTIVITY CENTER	2ND FLOOR	MENS STAFF LOCKER ROOM	1	63	R-REC/8-CFQ26/2-GFRR	Recessed Can 8" Recessed Compact Fluorescent, quad, (2) 26W lamp Round Glass Fresnel Lens	1	63	N/R NONE	Recessed No Retrofit. To remain as is.	1800	LOCKER	0.063	0.063	112.86	112.86
230	MULTIPURPOSE ACTIVITY CENTER	2ND FLOOR	WOMENS STAFF LOCKER ROOM	12	85	R-2X4-F43ILL-PR	2'x4' Troffer Recessed Fluorescent, (3) 48", T-8 lamp, Instant Start Ballast, NLO (BF: .85-.95) Prismatic Acrylic Diffuser	12	30	CK2x4 LEDT8/4/15W/2	Recessed Install 2x4 2-Lamp Centering Kit LED 4' T8 Lamp (2) 15W Lamps	1800	LOCKER	1.015	0.360	1826.28	648.00
231	MULTIPURPOSE ACTIVITY CENTER	2ND FLOOR	WOMENS STAFF LOCKER ROOM	2	45	R-2X2-F23ILL-PR	2'x2' Troffer Recessed Fluorescent, (3) 24", T-8 lamp, Instant Start Ballast, NLO (BF: .85-.95) Prismatic Acrylic Diffuser	2	20	LEDT8 LEDT8/2/10W/2	Recessed T8 LED Retrofit Lamp with External Driver LED 2' T8 Lamp (2) 10W Lamps	1800	LOCKER	0.089	0.040	160.74	72.00
1	MULTIPURPOSE ACTIVITY CENTER	2ND FLOOR	WOMENS STAFF LOCKER ROOM	2	85	FL-2X4-F43ILL-PR	2'x4' Troffer Recessed Flanged Fluorescent, (3) 48", T-8 lamp, Instant Start Ballast, NLO (BF: .85-.95) Prismatic Acrylic Diffuser	2	30	CK2x4 LEDT8/4/15W/2	Recessed Flanged Install 2x4 2-Lamp Centering Kit LED 4' T8 Lamp (2) 15W Lamps	1800	LOCKER	0.169	0.060	304.38	108.00
233	MULTIPURPOSE ACTIVITY CENTER	2ND FLOOR	WOMENS STAFF LOCKER ROOM	1	63	R-REC/8-CFQ26/2-GFRR	Recessed Can 8" Recessed Compact Fluorescent, quad, (2) 26W lamp Round Glass Fresnel Lens	1	63	N/R NONE	Recessed No Retrofit. To remain as is.	1800	LOCKER	0.063	0.063	112.86	112.86
234	MULTIPURPOSE ACTIVITY CENTER	2ND FLOOR	BASKETBALL COACH OFFICE 224	2	85	R-2X4-F43ILL-PR	2'x4' Troffer Recessed Fluorescent, (3) 48", T-8 lamp, Instant Start Ballast, NLO (BF: .85-.95) Prismatic Acrylic Diffuser	2	30	CK2x4 LEDT8/4/15W/2	Recessed Install 2x4 2-Lamp Centering Kit LED 4' T8 Lamp (2) 15W Lamps	2080	OFFICE	0.169	0.060	351.73	124.80
235	MULTIPURPOSE ACTIVITY CENTER	2ND FLOOR	CROSS COUNTRY COACH OFFICE 226	2	85	R-2X4-F43ILL-PR	2'x4' Troffer Recessed Fluorescent, (3) 48", T-8 lamp, Instant Start Ballast, NLO (BF: .85-.95) Prismatic Acrylic Diffuser	2	30	CK2x4 LEDT8/4/15W/2	Recessed Install 2x4 2-Lamp Centering Kit LED 4' T8 Lamp (2) 15W Lamps	2080	OFFICE	0.169	0.060	351.73	124.80
236	MULTIPURPOSE ACTIVITY CENTER	2ND FLOOR	FOOTBALL HEAD COACH OFFICE 225	2	85	R-2X4-F43ILL-PR	2'x4' Troffer Recessed Fluorescent, (3) 48", T-8 lamp, Instant Start Ballast, NLO (BF: .85-.95) Prismatic Acrylic Diffuser	2	30	CK2x4 LEDT8/4/15W/2	Recessed Install 2x4 2-Lamp Centering Kit LED 4' T8 Lamp (2) 15W Lamps	2080	OFFICE	0.169	0.060	351.73	124.80
237	MULTIPURPOSE ACTIVITY CENTER	2ND FLOOR	FOOTBALL ASSISTANCT COACH OFFICE 224	2	85	R-2X4-F43ILL-PR	2'x4' Troffer Recessed Fluorescent, (3) 48", T-8 lamp, Instant Start Ballast, NLO (BF: .85-.95) Prismatic Acrylic Diffuser	2	30	CK2x4 LEDT8/4/15W/2	Recessed Install 2x4 2-Lamp Centering Kit LED 4' T8 Lamp (2) 15W Lamps	2080	OFFICE	0.169	0.060	351.73	124.80
238	MULTIPURPOSE ACTIVITY CENTER	2ND FLOOR	TRACK AND FIELD COACH OFFICE 210	2	85	R-2X4-F43ILL-PR	2'x4' Troffer Recessed Fluorescent, (3) 48", T-8 lamp, Instant Start Ballast, NLO (BF: .85-.95) Prismatic Acrylic Diffuser	2	30	CK2x4 LEDT8/4/15W/2	Recessed Install 2x4 2-Lamp Centering Kit LED 4' T8 Lamp (2) 15W Lamps	2080	OFFICE	0.169	0.060	351.73	124.80
239	MULTIPURPOSE ACTIVITY CENTER	2ND FLOOR	OFFICE 205	2	85	R-2X4-F43ILL-PR	2'x4' Troffer Recessed Fluorescent, (3) 48", T-8 lamp, Instant Start Ballast, NLO (BF: .85-.95) Prismatic Acrylic Diffuser	2	30	CK2x4 LEDT8/4/15W/2	Recessed Install 2x4 2-Lamp Centering Kit LED 4' T8 Lamp (2) 15W Lamps	2080	OFFICE	0.169	0.060	351.73	124.80
240	MULTIPURPOSE ACTIVITY CENTER	2ND FLOOR	OFFICE 206	2	85	R-2X4-F43ILL-PR	2'x4' Troffer Recessed Fluorescent, (3) 48", T-8 lamp, Instant Start Ballast, NLO (BF: .85-.95) Prismatic Acrylic Diffuser	2	30	CK2x4 LEDT8/4/15W/2	Recessed Install 2x4 2-Lamp Centering Kit LED 4' T8 Lamp (2) 15W Lamps	2080	OFFICE	0.169	0.060	351.73	124.80
241	MULTIPURPOSE ACTIVITY CENTER	2ND FLOOR	OFFICE 207	2	85	R-2X4-F43ILL-PR	2'x4' Troffer Recessed Fluorescent, (3) 48", T-8 lamp, Instant Start Ballast, NLO (BF: .85-.95) Prismatic Acrylic Diffuser	2	30	CK2x4 LEDT8/4/15W/2	Recessed Install 2x4 2-Lamp Centering Kit LED 4' T8 Lamp (2) 15W Lamps	2080	OFFICE	0.169	0.060	351.73	124.80
242	MULTIPURPOSE ACTIVITY CENTER	2ND FLOOR	TEAM MEETING ROOM	12	85	R-2X4-F43ILL-PR	2'x4' Troffer Recessed Fluorescent, (3) 48", T-8 lamp, Instant Start Ballast, NLO (BF: .85-.95) Prismatic Acrylic Diffuser	12	30	CK2x4 LEDT8/4/15W/2	Recessed Install 2x4 2-Lamp Centering Kit LED 4' T8 Lamp (2) 15W Lamps	1800	LOCKER	1.015	0.360	1826.28	648.00
243	MULTIPURPOSE ACTIVITY CENTER	2ND FLOOR	OUTSIDE TEAM MEETING ROOM	1	45	R-2X2-F23ILL-PR	2'x2' Troffer Recessed Fluorescent, (3) 24", T-8 lamp, Instant Start Ballast, NLO (BF: .85-.95) Prismatic Acrylic Diffuser	1	20	LEDT8 LEDT8/2/10W/2	Recessed T8 LED Retrofit Lamp with External Driver LED 2' T8 Lamp (2) 10W Lamps	2520	CORR	0.045	0.020	112.52	50.40
244	MULTIPURPOSE ACTIVITY CENTER	2ND FLOOR	OUTSIDE TEAM MEETING ROOM	1	56	S-W4-F42ILL-W	4' Wraparound Surface Mounted Fluorescent, (2) 48", T-8 lamp, Instant Start Ballast, NLO (BF: .85-.95) Acrylic Wrap-Around Diffuser	1	30	CKW42 LEDT8/4/15W/2	Surface Mounted Install 4' Wrap Centering Kit LED 4' T8 Lamp (2) 15W Lamps	2520	CORR	0.056	0.030	141.25	75.60
245	MULTIPURPOSE ACTIVITY CENTER	3RD FLOOR	TRACK LOBBY AREA	4	63	S-CYLINDER-CFQ26/2-NL	Cylinder Fixture Surface Mounted Compact Fluorescent, quad, (2) 26W lamp (No Diffuser)	4	63	N/R NONE	Surface Mounted No Retrofit. To remain as is.	3640	GYM	0.251	0.251	912.91	912.91
246	MULTIPURPOSE ACTIVITY CENTER	3RD FLOOR	TRACK LOBBY AREA	3	63	S-CYLINDER-CFQ26/2-NL	Cylinder Fixture Surface Mounted Compact Fluorescent, quad, (2) 26W lamp (No Diffuser)	3	63	N/R NONE	Surface Mounted No Retrofit. To remain as is	3640	GYM	0.188	0.188	684.68	684.68
247	MULTIPURPOSE ACTIVITY CENTER	ALL AREAS	STAIRWELL A	5	56	S-W4-F42ILL-W	4' Wraparound Surface Mounted Fluorescent, (2) 48", T-8 lamp, Instant Start Ballast, NLO (BF: .85-.95) Acrylic Wrap-Around Diffuser	5	30	CKW42 LEDT8/4/15W/2	Surface Mounted Install 4' Wrap Centering Kit LED 4' T8 Lamp (2) 15W Lamps	8760	EMERG	0.280	0.150	2454.99	1314.00
248	MULTIPURPOSE ACTIVITY CENTER	ALL AREAS	STAIRWELL A	4	56	R-1X4-F42ILL-PR	1'x4' Troffer Recessed Fluorescent, (2) 48", T-8 lamp, Instant Start Ballast, NLO (BF: .85-.95) Prismatic Acrylic Diffuser	4	30	LEDT8 LEDT8/4/15W/2	Recessed T8 LED Retrofit Lamp with External Driver LED 4' T8 Lamp (2) 15W Lamps	8760	EMERG	0.224	0.120	1963.99	1051.20
249	MULTIPURPOSE ACTIVITY CENTER	ALL AREAS	STAIRWELL B	5	56	S-W4-F42ILL-W	4' Wraparound Surface Mounted Fluorescent, (2) 48", T-8 lamp, Instant Start Ballast NLO (BF: .85-.95) Acrylic Wrap-Around Diffuser	5	30	CKW42 LEDT8/4/15W/2	Surface Mounted Install 4' Wrap Centering Kit LED 4' T8 Lamp (2) 15W Lamps	8760	EMERG	0.280	0.150	2454.99	1314.00
250	MULTIPURPOSE ACTIVITY CENTER	ALL AREAS	STAIRWELL B	4	56	R-1X4-F42ILL-PR	1'x4' Troffer Recessed Fluorescent, (2) 48", T-8 lamp, Instant Start Ballast, NLO (BF: .85-.95) Prismatic Acrylic Diffuser	4	30	LEDT8 LEDT8/4/15W/2	Recessed T8 LED Retrofit Lamp with External Driver LED 4' T8 Lamp (2) 15W Lamps	8760	EMERG	0.224	0.120	1963.99	1051.20
251	MULTIPURPOSE ACTIVITY CENTER	ALL AREAS	STAIRWELL C	5	56	S-W4-F42ILL-W	4' Wraparound Surface Mounted Fluorescent, (2) 48", T-8 lamp, Instant Start Ballast, NLO (BF: .85-.95) Acrylic Wrap-Around Diffuser	5	30	CKW42 LEDT8/4/15W/2	Surface Mounted Install 4' Wrap Centering Kit LED 4' T8 Lamp (2) 15W Lamps	8760	EMERG	0.280	0.150	2454.99	1314.00
252	MULTIPURPOSE ACTIVITY CENTER	ALL AREAS	STAIRWELL D	5	56	S-W4-F42ILL-W	4' Wraparound Surface Mounted Fluorescent, (2) 48", T-8 lamp, Instant Start Ballast, NLO (BF: .85-.95) Acrylic Wrap-Around Diffuser	5	30	CKW42 LEDT8/4/15W/2	Surface Mounted Install 4' Wrap Centering Kit LED 4' T8 Lamp (2) 15W Lamps	8760	EMERG	0.280	0.150	2454.99	1314.00
253	WOOLWORTH BUILDING	1ST FLOOR	ENTRY VESTIBULE	2	22	WM-JJ-CFS23/1-JJG	Jelly Jar Wall Mounted Compact Fluorescent, spiral, (1) 23W lamp Glass Jelly Jar	2	12	LEDS/A LEDS12/1	Wall Mounted Install LED Screw-in A-Style Lamp Light Emitting Diode Lamp, Screw-in (1) 12W lamp	2520	CORR	0.044	0.024	110.12	60.48
254	WOOLWORTH BUILDING	1ST FLOOR	ENTRY VESTIBULE	1	22	PE-GLOBE-CFS23/1-GLOBE	Globe Pendant Mounted Compact Fluorescent, spiral, (1) 23W lamp Globe Diffuser	1	12	LEDS/A LEDS12/1	Pendant Mounted Install LED Screw-in A-Style Lamp Light Emitting Diode Lamp, Screw-in, (1) 12W lamp	2520	CORR	0.022	0.012	55.06	30.24
255	WOOLWORTH BUILDING	2ND FLOOR	HALLWAY	12	106	S-W4-F44ILL-W	4' Wraparound Surface Mounted Fluorescent, (4) 48", T-8 lamp, Instant Start Ballast, NLO (BF: .85-.95) Acrylic Wrap-Around Diffuser	12	30	CKW42 LEDT8/4/15W/2	Surface Mounted Install 4' Wrap Centering Kit LED 4' T8 Lamp (2) 15W Lamps	2520	CORR	1.277	0.360	3217.54	907.20
2	WOOLWORTH BUILDING	2ND FLOOR	DRAFTING ROOM 201	8	106	R-2X4-F44ILL-PR	2'x4' Troffer Recessed Fluorescent, (4) 48", T-8 lamp, Instant Start Ballast, NLO (BF: .85-.95) Prismatic Acrylic Diffuser	8	30	CK2x4 LEDT8/4/15W/2	Recessed Install 2x4 2-Lamp Centering Kit LED 4' T8 Lamp (2) 15W Lamps	2200	CLASS	0.851	0.240	1872.64	528.00
257	WOOLWORTH BUILDING	2ND FLOOR	CLASSROOM 203	8	106	R-2X4-F44ILL-PR	2'x4' Troffer Recessed Fluorescent, (4) 48", T-8 lamp, Instant Start Ballast, NLO (BF: .85-.95) Prismatic Acrylic Diffuser	8	30	CK2x4 LEDT8/4/15W/2	Recessed Install 2x4 2-Lamp Centering Kit LED 4' T8 Lamp (2) 15W Lamps	2200	CLASS	0.851	0.240	1872.64	528.00
258	WOOLWORTH BUILDING	1ST FLOOR	PLUMBING SHOP	57	68	PE-IND4-F42EE-NL	4' Industrial Pendant Mounted Fluorescent, (2) 48", ES lamp (No Diffuser)	57	30	LEDT8 LEDT8/4/15W/2	Pendant Mounted T8 LED Retrofit Lamp with External Driver LED 4' T8 Lamp (2) 15W Lamps	2200	CLASS	3.899	1.710	8577.36	3762.00

Line #	Facility	Area	Space	Pre Fixture Qty	Pre Wattage	Pre Code	Pre Description	Post Fixture Qty	Post Wattage	Post Code	Post Description	Hours Pre	Hours Code	Base kW	Retro Proposed kW	Base kWh	Retro Proposed kWh
259	WOOLWORTH BUILDING	1ST FLOOR	WELDERS SHOP	47	68	PE-IND4-F42EE-NL	4' Industrial Pendant Mounted Fluorescent, (2) 48", ES lamp (No Diffuser)	47	30	LEDT8 LEDT8/4/15W/2	Pendant Mounted T8 LED Retrofit Lamp with External Driver LED 4' T8 Lamp (2) 15W Lamps	2200	CLASS	3.215	1.410	7072.56	3102.00
260	WOOLWORTH BUILDING	1ST FLOOR	REAR ENTRY VESTIBULE	2	57	WM-J3-I60/1-JJG	Jelly Jar Wall Mounted Incandescent, (1) 60W lamp Glass Jelly Jar	2	12	LEDSI/A LEDS12/1	Wall Mounted Install LED Screw-in A-Style Lamp Light Emitting Diode Lamp, Screw-in, (1) 12W lamp	2520	CORR	0.114	0.024	287.28	60.48
261	WOOLWORTH BUILDING	1ST FLOOR	REAR ENTRY VESTIBULE	1	68	S-IND4-F42EE-NL	4' Industrial Surface Mounted Fluorescent (2) 48", ES lamp (No Diffuser)	1	30	LEDT8 LEDT8/4/15W/2	Surface Mounted T8 LED Retrofit Lamp with External Driver LED 4' T8 Lamp (2) 15W Lamps	2520	CORR	0.068	0.030	172.37	75.[illegible]
262	WOOLWORTH BUILDING	1ST FLOOR	WELDERS SHOP (STORAGE USE ?)	10	280	PE-HB-MH250/1-PR	High-Bay Pendant Mounted Metal Halide, (1) 250W lamp Prismatic Acrylic Diffuser	10	54	LEDSI/COB LEDS54/1	Pendant Mounted Chip On Board (COB) Type Screw-in / Bypass Existing Ballast Light Emitting Diode Lamp, Screw-in, (1) 54W lamp - HIGH	1040	STORAGE	2.803	0.540	2914.60	561.60
263	WOOLWORTH BUILDING	1ST FLOOR	PIPE FITTERS SHOP	36	106	S-W4-F44ILL-W	4' Wraparound Surface Mounted Fluorescent, (4) 48", T-8 lamp, Instant Start Ballast, NLO (BF: .85-.95) Acrylic Wrap-Around Diffuser	36	60	LEDT8 LEDT8/4/15W/4	Surface Mounted T8 LED Retrofit Lamp with External Driver LED 4' T8 Lamp (4) 15W Lamps	2200	CLASS	3.830	2.160	8426.88	4752.00
264	WOOLWORTH BUILDING	1ST FLOOR	OFFICES (ALL SHOPS)	8	106	S-W4-F44ILL-W	4' Wraparound Surface Mounted Fluorescent, (4) 48", T-8 lamp, Instant Start Ballast, NLO (BF: .85-.95) Acrylic Wrap-Around Diffuser	8	30	CKW42 LEDT8/4/15W/2	Surface Mounted Install 4' Wrap Centering Kit LED 4' T8 Lamp (2) 15W Lamps	2080	OFFICE	0.851	0.240	1770.50	499.20
265	WOOLWORTH BUILDING	1ST FLOOR	RESTROOMS (ALL SHOPS)	8	56	R-2X4-F42ILL-PR	2'x4' Troffer Recessed Fluorescent, (2) 48", T-8 lamp, Instant Start Ballast, NLO (BF: .85-.95) Prismatic Acrylic Diffuser	8	30	CK2x4 LEDT8/4/15W/2	Recessed Install 2x4 2-Lamp Centering Kit LED 4' T8 Lamp (2) 15W Lamps	2200	CLASS	0.448	0.240	986.48	528.00
266	WOOLWORTH BUILDING	1ST FLOOR	TOOL ROOMS (ALL SHOPS)	8	106	S-W4-F44ILL-W	4' Wraparound Surface Mounted Fluorescent, (4) 48", T-8 lamp, Instant Start Ballast, NLO (BF: .85-.95) Acrylic Wrap-Around Diffuser	8	30	CKW42 LEDT8/4/15W/2	Surface Mounted Install 4' Wrap Centering Kit LED 4' T8 Lamp (2) 15W Lamps	2200	CLASS	0.851	0.240	1872.64	528.00
267	SNYDER BUILDING	1ST FLOOR	HALLWAY	28	56	R-2X4-F42ILL-PR	2'x4' Troffer Recessed Fluorescent, (2) 48", T-8 lamp, Instant Start Ballast, NLO (BF: .85-.95) Prismatic Acrylic Diffuser	28	30	LEDT8 LEDT8/4/15W/2	Recessed T8 LED Retrofit Lamp with External Driver LED 4' T8 Lamp (2) 15W Lamps	2520	CORR	1.569	0.840	3954.89	2116.80
268	SNYDER BUILDING	1ST FLOOR	HALLWAY	1	56	R-W4-F42ILL-PR	4' Wraparound Recessed Fluorescent, (2) 48", T-8 lamp, Instant Start Ballast, NLO (BF: .85-.95) Prismatic Acrylic Diffuser	1	30	LEDT8 LEDT8/4/15W/2	Recessed T8 LED Retrofit Lamp with External Driver LED 4' T8 Lamp (2) 15W Lamps	2520	CORR	0.056	0.030	141.25	75.60
269	SNYDER BUILDING	1ST FLOOR	ELECTRICAL SHOP	30	106	PE-VP8-F44ILL-VP	8' Vapor Proof Pendant Mounted Fluorescent, (4) 48", T-8 lamp, Instant Start Ballast, NLO (BF: .85-.95) Vapor Proof Gasketed Diffuser	30	60	LEDT8 LEDT8/4/15W/4	Pendant Mounted T8 LED Retrofit Lamp with External Driver LED 4' T8 Lamp (4) 15W Lamps	2200	CLASS	3.192	1.800	7022.40	3960.00
270	SNYDER BUILDING	1ST FLOOR	OFFICE	2	106	S-2X4-F44ILL-PR	2'x4' Troffer Surface Mounted Fluorescent, (4) 48", T-8 lamp, Instant Start Ballast, NLO (BF: .85-.95) Prismatic Acrylic Diffuser	2	30	CK2x4 LEDT8/4/15W/2	Surface Mounted Install 2x4 2-Lamp Centering Kit LED 4' T8 Lamp (2) 15W Lamps	2080	OFFICE	0.213	0.060	442.62	124.80
271	SNYDER BUILDING	1ST FLOOR	RESTROOM	5	56	S-VP4-F42ILL-VP	4' Vapor Proof Surface Mounted Fluorescent, (2) 48", T-8 lamp, Instant Start Ballast, NLO (BF: .85-.95) Vapor Proof Gasketed Diffuser	5	30	LEDT8 LEDT8/4/15W/2	Surface Mounted T8 LED Retrofit Lamp with External Driver LED 4' T8 Lamp (2) 15W Lamps	2160	RESTROOM	0.280	0.150	605.34	324.00
272	SNYDER BUILDING	1ST FLOOR	CLASSROOM	12	106	S-2X4-F44ILL-MC	2'x4' Troffer Surface Mounted Fluorescent, (4) 48", T-8 lamp, Instant Start Ballast, NLO (BF: .85-.95) Microcell Diffuser	12	30	CK2x4 LEDT8/4/15W/2	Surface Mounted Install 2x4 2-Lamp Centering Kit LED 4' T8 Lamp (2) 15W Lamps	2200	CLASS	1.277	0.360	2808.96	792.00
273	SNYDER BUILDING	1ST FLOOR	HALLWAY	2	56	S-2X4-F42ILL-PR	2'x4' Troffer Surface Mounted Fluorescent, (2) 48", T-8 lamp, Instant Start Ballast, NLO (BF: .85-.95) Prismatic Acrylic Diffuser	2	30	LEDT8 LEDT8/4/15W/2	Surface Mounted T8 LED Retrofit Lamp with External Driver LED 4' T8 Lamp (2) 15W Lamps	2520	CORR	0.112	0.060	282.49	151.20
274	SNYDER BUILDING	1ST FLOOR	MENS RESTROOM	2	56	S-VP4-F42ILL-VP	4' Vapor Proof Surface Mounted Fluorescent, (2) 48", T-8 lamp, Instant Start Ballast, NLO (BF: .85-.95) Vapor Proof Gasketed Diffuser	2	30	LEDT8 LEDT8/4/15W/2	Surface Mounted T8 LED Retrofit Lamp with External Driver LED 4' T8 Lamp (2) 15W Lamps	2160	RESTROOM	0.112	0.060	242.14	129.60
275	SNYDER BUILDING	1ST FLOOR	WOMENS RESTROOM	2	56	S-VP4-F42ILL-VP	4' Vapor Proof Surface Mounted Fluorescent, (2) 48", T-8 lamp, Instant Start Ballast, NLO (BF: .85-.95) Vapor Proof Gasketed Diffuser	2	30	LEDT8 LEDT8/4/15W/2	Surface Mounted T8 LED Retrofit Lamp with External Driver LED 4' T8 Lamp (2) 15W Lamps	2160	RESTROOM	0.112	0.060	242.14	129.60
276	SNYDER BUILDING	1ST FLOOR	CARPENTERS SHOP	24	106	PE-VP8-F44ILL-VP	8' Vapor Proof Pendant Mounted Fluorescent, (4) 48", T-8 lamp, Instant Start Ballast, NLO (BF: .85-.95) Vapor Proof Gasketed Diffuser	24	60	LEDT8 LEDT8/4/15W/4	Pendant Mounted T8 LED Retrofit Lamp with External Driver LED 4' T8 Lamp (4) 15W Lamps	2200	CLASS	2.554	1.440	5617.92	3168.00
277	SNYDER BUILDING	1ST FLOOR	CARPENTERS SHOP	2	56	S-IND4-F42ILL-NL	4' Industrial Surface Mounted Fluorescent, (2) 48", T-8 lamp, Instant Start Ballast, NLO (BF: .85-.95) (No Diffuser)	2	30	LEDT8 LEDT8/4/15W/2	Surface Mounted T8 LED Retrofit Lamp with External Driver LED 4' T8 Lamp (2) 15W Lamps	2200	CLASS	0.112	0.060	246.62	132.00
278	SNYDER BUILDING	2ND FLOOR	CARPENTERS SHOP UPPER LOFT	6	56	S-W4-F42ILL-W	4' Wraparound Surface Mounted Fluorescent, (2) 48", T-8 lamp, Instant Start Ballast, NLO (BF: .85-.95) Acrylic Wrap-Around Diffuser	6	30	LEDT8 LEDT8/4/15W/2	Surface Mounted T8 LED Retrofit Lamp with External Driver LED 4' T8 Lamp (2) 15W Lamps	1040	STORAGE	0.336	0.180	349.75	187.20
279	SNYDER BUILDING	1ST FLOOR	SHOP HALL	2	56	S-2X4-F42ILL-PR	2'x4' Troffer Surface Mounted Fluorescent, (2) 48", T-8 lamp, Instant Start Ballast, NLO (BF: .85-.95) Prismatic Acrylic Diffuser	2	30	LEDT8 LEDT8/4/15W/2	Surface Mounted T8 LED Retrofit Lamp with External Driver LED 4' T8 Lamp (2) 15W Lamps	2200	CLASS	0.112	0.060	246.62	132.00
280	SNYDER BUILDING	1ST FLOOR	CARPENTERS SHOP OFFICE	2	106	S-2X4-F44ILL-PR	2'x4' Troffer Surface Mounted Fluorescent, (4) 48", T-8 lamp, Instant Start Ballast, NLO (BF: .85-.95) Prismatic Acrylic Diffuser	2	30	CK2x4 LEDT8/4/15W/2	Surface Mounted Install 2x4 2-Lamp Centering Kit LED 4' T8 Lamp (2) 15W Lamps	2080	OFFICE	0.213	0.060	442.62	124.80
281	SNYDER BUILDING	1ST FLOOR	TOOL SUPPLY	2	56	S-VP4-F42ILL-VP	4' Vapor Proof Surface Mounted Fluorescent, (2) 48", T-8 lamp, Instant Start Ballast NLO (BF: .85-.95) Vapor Proof Gasketed Diffuser	2	30	LEDT8 LEDT8/4/15W/2	Surface Mounted T8 LED Retrofit Lamp with External Driver LED 4' T8 Lamp (2) 15W Lamps	1040	STORAGE	0.112	0.060	116.58	62.40
282	SNYDER BUILDING	1ST FLOOR	AUTOMOTIVE TECH SHOP	36	106	PE-VP8-F44ILL-VP	8' Vapor Proof Pendant Mounted Fluorescent, (4) 48", T-8 lamp, Instant Start Ballast, NLO (BF: .85-.95) Vapor Proof Gasketed Diffuser	36	60	LEDT8 LEDT8/4/15W/4	Pendant Mounted T8 LED Retrofit Lamp with External Driver LED 4' T8 Lamp (4) 15W Lamps	2200	CLASS	3.830	2.160	8426.88	4752.00
283	SNYDER BUILDING	1ST FLOOR	AUTOMOTIVE TECH SHOP	3	56	S-W4-F42ILL-W	4' Wraparound Surface Mounted Fluorescent, (2) 48", T-8 lamp, Instant Start Ballast, NLO (BF: .85-.95) Acrylic Wrap-Around Diffuser	3	30	LEDT8 LEDT8/4/15W/2	Surface Mounted T8 LED Retrofit Lamp with External Driver LED 4' T8 Lamp (2) 15W Lamps	2200	CLASS	0.168	0.090	369.93	198.00
284	SNYDER BUILDING	1ST FLOOR	AUTOMOTIVE TECH SHOP	2	106	S-2X4-F44ILL-PR	2'x4' Troffer Surface Mounted Fluorescent, (4) 48", T-8 lamp, Instant Start Ballast, NLO (BF: .85-.95) Prismatic Acrylic Diffuser	2	30	CK2x4 LEDT8/4/15W/2	Surface Mounted Install 2x4 2-Lamp Centering Kit LED 4' T8 Lamp (2) 15W Lamps	2200	CLASS	0.213	0.060	468.16	132.[illegible]
285	SNYDER BUILDING	2ND FLOOR	AUTOMOTIVE TECH SHOP UPPER LOFT	25	56	S-IND4-F42ILL-NL	4' Industrial Surface Mounted Fluorescent, (2) 48", T-8 lamp, Instant Start Ballast, NLO (BF: .85-.95) (No Diffuser)	25	30	LEDT8 LEDT8/4/15W/2	Surface Mounted T8 LED Retrofit Lamp with External Driver LED 4' T8 Lamp (2) 15W Lamps	1040	STORAGE	1.401	0.750	1457.30	780.0[illegible]
286	SNYDER BUILDING	1ST FLOOR	AUTOMOTIVE TECH RESTROOM	5	56	S-VP4-F42ILL-VP	4' Vapor Proof Surface Mounted Fluorescent, (2) 48", T-8 lamp, Instant Start Ballast, NLO (BF: .85-.95) Vapor Proof Gasketed Diffuser	5	30	LEDT8 LEDT8/4/15W/2	Surface Mounted T8 LED Retrofit Lamp with External Driver LED 4' T8 Lamp (2) 15W Lamps	2200	CLASS	0.280	0.150	616.55	330.00
287	SNYDER BUILDING	2ND FLOOR	UPPER HALLWAY	1	56	S-2X4-F42ILL-PR	2'x4' Troffer Surface Mounted Fluorescent, (2) 48", T-8 lamp, Instant Start Ballast, NLO (BF: .85-.95) Prismatic Acrylic Diffuser	1	30	LEDT8 LEDT8/4/15W/2	Surface Mounted T8 LED Retrofit Lamp with External Driver LED 4' T8 Lamp (2) 15W Lamps	2520	CORR	0.056	0.030	141.25	75.60
288	SNYDER BUILDING	2ND FLOOR	AUTOMOTIVE CLASSROOM	12	106	R-2X4-F44ILL-PR	2'x4' Troffer Recessed Fluorescent, (4) 48", T-8 lamp, Instant Start Ballast, NLO (BF: .85-.95) Prismatic Acrylic Diffuser	12	30	CK2x4 LEDT8/4/15W/2	Recessed Install 2x4 2-Lamp Centering Kit LED 4' T8 Lamp (2) 15W Lamps	2200	CLASS	1.277	0.360	2808.96	792.00
289	SNYDER BUILDING	2ND FLOOR	AUTOMOTIVE CLASSROOM	12	106	R-2X4-F44ILL-PR	2'x4' Troffer Recessed Fluorescent, (4) 48", T-8 lamp, Instant Start Ballast, NLO (BF: .85-.95) Prismatic Acrylic Diffuser	12	30	CK2x4 LEDT8/4/15W/2	Recessed Install 2x4 2-Lamp Centering Kit LED 4' T8 Lamp (2) 15W Lamps	2200	CLASS	1.277	0.360	2808.96	792.00
290	SNYDER BUILDING	1ST FLOOR	DYNAMOMETER ROOM	10	56	S-VP4-F42ILL-VP	4' Vapor Proof Surface Mounted Fluorescent, (2) 48", T-8 lamp, Instant Start Ballast, NLO (BF: .85-.95) Vapor Proof Gasketed Diffuser	10	30	LEDT8 LEDT8/4/15W/2	Surface Mounted T8 LED Retrofit Lamp with External Driver LED 4' T8 Lamp (2) 15W Lamps	2200	CLASS	0.561	0.300	1233.10	660.00
291	SNYDER BUILDING	1ST FLOOR	CLASSROOM	12	106	R-2X4-F44ILL-PR	2'x4' Troffer Recessed Fluorescent, (4) 48", T-8 lamp, Instant Start Ballast, NLO (BF: .85-.95) Prismatic Acrylic Diffuser	12	30	CK2x4 LEDT8/4/15W/2	Recessed Install 2x4 2-Lamp Centering Kit LED 4' T8 Lamp (2) 15W Lamps	2200	CLASS	1.277	0.360	2808.96	792.00
292	SNYDER BUILDING	1ST FLOOR	CABINET MAKING WOODSHOP	44	106	PE-VP8-F44ILL-VP	8' Vapor Proof Pendant Mounted Fluorescent, (4) 48", T-8 lamp, Instant Start Ballast, NLO (BF: .85-.95) Vapor Proof Gasketed Diffuser	44	60	LEDT8 LEDT8/4/15W/4	Pendant Mounted T8 LED Retrofit Lamp with External Driver LED 4' T8 Lamp (4) 15W Lamps	2200	CLASS	4.682	2.640	10299.52	5808.00
293	SNYDER BUILDING	1ST FLOOR	WOODSHOP TOOL STORAGE	4	56	S-IND4-F42ILL-NL	4' Industrial Surface Mounted Fluorescent, (2) 48", T-8 lamp, Instant Start Ballast, NLO (BF: .85-.95) (No Diffuser)	4	30	LEDT8 LEDT8/4/15W/2	Surface Mounted T8 LED Retrofit Lamp with External Driver LED 4' T8 Lamp (2) 15W Lamps	1040	STORAGE	0.224	0.120	233.17	124.80
294	SNYDER BUILDING	1ST FLOOR	WOODSHOP OFFICE	2	106	S-2X4-F44ILL-PR	2'x4' Troffer Surface Mounted Fluorescent, (4) 48", T-8 lamp, Instant Start Ballast, NLO (BF: .85-.95) Prismatic Acrylic Diffuser	2	30	CK2x4 LEDT8/4/15W/2	Surface Mounted Install 2x4 2-Lamp Centering Kit LED 4' T8 Lamp (2) 15W Lamps	2080	OFFICE	0.213	0.060	442.62	124.80
295	SNYDER BUILDING	1ST FLOOR	WOOD STORAGE	8	56	S-IND4-F42ILL-NL	4' Industrial Surface Mounted Fluorescent, (2) 48", T-8 lamp, Instant Start Ballast, NLO (BF: .85-.95) (No Diffuser)	8	30	LEDT8 LEDT8/4/15W/2	Surface Mounted T8 LED Retrofit Lamp with External Driver LED 4' T8 Lamp (2) 15W Lamps	540	STORAGE	0.448	0.240	242.14	129.60
296	SNYDER BUILDING	1ST FLOOR	WOOD STORAGE	3	56	S-W4-F42ILL-W	4' Wraparound Surface Mounted Fluorescent, (2) 48", T-8 lamp, Instant Start Ballast, NLO (BF: .85-.95) Acrylic Wrap-Around Diffuser	3	30	LEDT8 LEDT8/4/15W/2	Surface Mounted T8 LED Retrofit Lamp with External Driver LED 4' T8 Lamp (2) 15W Lamps	540	STORAGE	0.168	0.090	90.80	48.60
297	SNYDER BUILDING	1ST FLOOR	PAINT / STAIN BOOTH	3	85	FL-1X4-F43ILL-FGL	1'x4' Troffer Recessed Flanged Fluorescent, (3) 48", T-8 lamp, Instant Start Ballast, NLO (BF: .85-.95) Flat Glass Lens	3	45	LEDT8 LEDT8/4/15W/3	Recessed Flanged T8 LED Retrofit Lamp with External Driver LED 4' T8 Lamp (3) 15W Lamps	1040	STORAGE	0.254	0.135	263.80	140.40
298	SNYDER BUILDING	1ST FLOOR	CLASSROOM	12	106	S-2X4-F44ILL-PR	2'x4' Troffer Surface Mounted Fluorescent, (4) 48", T-8 lamp, Instant Start Ballast, NLO (BF: .85-.95) Prismatic Acrylic Diffuser	12	30	CK2x4 LEDT8/4/15W/2	Surface Mounted Install 2x4 2-Lamp Centering Kit LED 4' T8 Lamp (2) 15W Lamps	2200	CLASS	1.277	0.360	2808.96	792.00
299	SNYDER BUILDING	1ST FLOOR	AUTOBODY SHOP	25	106	S-VP8-F44ILL-VP	8' Vapor Proof Surface Mounted Fluorescent, (4) 48", T-8 lamp, Instant Start Ballast, NLO (BF: .85-.95) Vapor Proof Gasketed Diffuser	25	60	LEDT8 LEDT8/4/15W/4	Surface Mounted T8 LED Retrofit Lamp with External Driver LED 4' T8 Lamp (4) 15W Lamps	2200	CLASS	2.660	1.500	5852.00	3300.00
300	SNYDER BUILDING	2ND FLOOR	AUTOBODY SHOP UPPER LOFT	16	56	S-IND4-F42ILL-NL	4' Industrial Surface Mounted Fluorescent, (2) 48", T-8 lamp, Instant Start Ballast, NLO (BF: .85-.95) (No Diffuser)	16	30	LEDT8 LEDT8/4/15W/2	Surface Mounted T8 LED Retrofit Lamp with External Driver LED 4' T8 Lamp (2) 15W Lamps	1040	STORAGE	0.897	0.480	932.67	499.20
301	SNYDER BUILDING	1ST FLOOR	PAINT BOOTH	16	64	FL-1X3-F33ILL-FGL	1'x3' Troffer Recessed Flanged Fluorescent, (3) 36", T-8 lamp, Instant Start Ballast, NLO (BF: .85-.95) Flat Glass Lens	16	30	LEDT8 LEDT8/3/10W/3	Recessed Flanged T8 LED Retrofit Lamp with External Driver LED 3' T8 Lamp (3) 10W Lamps	1040	STORAGE	1.018	0.480	1059.14	499.20
302	SNYDER BUILDING	1ST FLOOR	PAINT BOOTH	6	85	FL-1X4-F43ILL-FGL	1'x4' Troffer Recessed Flanged Fluorescent, (3) 48", T-8 lamp, Instant Start Ballast, NLO (BF: .85-.95) Flat Glass Lens	6	45	LEDT8 LEDT8/4/15W/3	Recessed Flanged T8 LED Retrofit Lamp with External Driver LED 4' T8 Lamp (3) 15W Lamps	1040	STORAGE	0.507	0.270	527.59	280.80
303	SNYDER BUILDING	1ST FLOOR	PAINT BOOTH	4	64	FL-1X3-F33ILL-FGL	1'x3' Troffer Recessed Flanged Fluorescent, (3) 36", T-8 lamp, Instant Start Ballast, NLO (BF: .85-.95) Flat Glass Lens	4	30	LEDT8 LEDT8/3/10W/3	Recessed Flanged T8 LED Retrofit Lamp with External Driver LED 3' T8 Lamp (3) 10W Lamps	1040	STORAGE	0.255	0.120	264.78	124.80
304	SNYDER BUILDING	1ST FLOOR	AUTOBODY SHOP OFFICE	2	106	S-2X4-F44ILL-PR	2'x4' Troffer Surface Mounted Fluorescent, (4) 48", T-8 lamp, Instant Start Ballast, NLO (BF: .85-.95) Prismatic Acrylic Diffuser	2	30	CK2x4 LEDT8/4/15W/2	Surface Mounted Install 2x4 2-Lamp Centering Kit LED 4' T8 Lamp (2) 15W Lamps	2080	OFFICE	0.213	0.060	442.62	124.80
305	SNYDER BUILDING	1ST FLOOR	AUTOBODY SHOP RESTROOM	5	56	S-VP4-F42ILL-VP	4' Vapor Proof Surface Mounted Fluorescent, (2) 48", T-8 lamp, Instant Start Ballast, NLO (BF: .85-.95) Vapor Proof Gasketed Diffuser	5	30	LEDT8 LEDT8/4/15W/2	Surface Mounted T8 LED Retrofit Lamp with External Driver LED 4' T8 Lamp (2) 15W Lamps	2200	CLASS	0.280	0.150	616.55	330.00
306	SNYDER BUILDING	1ST FLOOR	AUTOBODY SHOP TOOL STORAGE	2	56	S-IND4-F42ILL-NL	4' Industrial Surface Mounted Fluorescent, (2) 48", T-8 lamp, Instant Start Ballast, NLO (BF: .85-.95) (No Diffuser)	2	30	LEDT8 LEDT8/4/15W/2	Surface Mounted T8 LED Retrofit Lamp with External Driver LED 4' T8 Lamp (2) 15W Lamps	1040	CLASS	0.112	0.060	116.58	62.40
307	LEONARD BUILDING	1ST FLOOR (MACHINE SHOP)	HALLWAY	7	56	R-2X4-F42ILL-PR	2'x4' Troffer Recessed Fluorescent, (2) 48", T-8 lamp, Instant Start Ballast, NLO (BF: .85-.95) Prismatic Acrylic Diffuser	7	30	LEDT8 LEDT8/4/15W/2	Recessed T8 LED Retrofit Lamp with External Driver LED 4' T8 Lamp (2) 15W Lamps	2520	CORR	0.392	0.210	988.72	529.20
308	LEONARD BUILDING	1ST FLOOR (MACHINE SHOP)	SHOP 1	1	56	S-W4-F42ILL-W	4' Wraparound Surface Mounted Fluorescent, (2) 48", T-8 lamp, Instant Start Ballast, NLO (BF: .85-.95) Acrylic Wrap-Around Diffuser	1	30	LEDT8 LEDT8/4/15W/2	Surface Mounted T8 LED Retrofit Lamp with External Driver LED 4' T8 Lamp (2) 15W Lamps	2200	CLASS	0.056	0.030	123.31	66.[illegible]
309	LEONARD BUILDING	1ST FLOOR (MACHINE SHOP)	SHOP 1	60	106	PE-W4-F44ILL-W	4' Wraparound Pendant Mounted Fluorescent, (4) 48", T-8 lamp, Instant Start Ballast, NLO (BF: .85-.95) Acrylic Wrap-Around Diffuser	60	60	LEDT8 LEDT8/4/15W/4	Pendant Mounted T8 LED Retrofit Lamp with External Driver LED 4' T8 Lamp (4) 15W Lamps	2200	CLASS	6.384	3.600	14044.80	7920.00
310	LEONARD BUILDING	1ST FLOOR (MACHINE SHOP)	RESTROOM	1	56	S-S4-F42ILL-NL	4' Strip Surface Mounted Fluorescent, (2) 48", T-8 lamp, Instant Start Ballast, NLO (BF: .85-.95) (No Diffuser)	1	30	LEDT8 LEDT8/4/15W/2	Surface Mounted T8 LED Retrofit Lamp with External Driver LED 4' T8 Lamp (2) 15W Lamps	2160	RESTROOM	0.056	0.030	121.07	64.80

Line #	Facility	Area	Space	Pre Fixture Qty	Pre Wattage	Pre Code	Pre Description	Post Fixture Qty	Post Wattage	Post Code	Post Description	Hours Pre	Hours Code	Base kW	Retro Proposed kW	Base kWh	Retro Proposed kWh
311	LEONARD BUILDING	1ST FLOOR (MACHINE SHOP)	SHOP 1A	2	106	S-W4-F44ILL-W	4' Wraparound Surface Mounted Fluorescent. (4) 48", T-8 lamp, Instant Start Ballast, NLO (BF: .85-.95) Acrylic Wrap-Around Diffuser	2	60	LEDT8 LEDT8/4/15W/4	Surface Mounted T8 LED Retrofit Lamp with External Driver LED 4' T8 Lamp (4) 15W Lamps	2200	CLASS	0.213	0.120	468.16	264.00
[illegible]	LEONARD BUILDING	1ST FLOOR (MACHINE SHOP)	SHOP OFFICE	1	117	S-VP8-F82EE-VP	8' Vapor Proof Surface Mounted Fluorescent. (2) 96", ES lamp Vapor Proof Gasketed Diffuser	1	30	CKS842 LEDT8/4/15W/2	Surface Mounted Install 8' Strip, 2-Lamp Centering Kit LED 4' T8 Lamp (2) 15W Lamps	2080	OFFICE	0.117	0.030	243.05	62.40
[illegible]	LEONARD BUILDING	1ST FLOOR (MACHINE SHOP)	SHOP 1A OFFICE	1	117	S-IND8-F82EE-NL	8' Industrial Surface Mounted Fluorescent. (2) 96", ES lamp (No Diffuser)	1	30	CKS842 LEDT8/4/15W/2	Surface Mounted Install 8' Strip, 2-Lamp Centering Kit LED 4' T8 Lamp (2) 15W Lamps	2080	OFFICE	0.117	0.030	243.05	62.40
314	LEONARD BUILDING	1ST FLOOR (MACHINE SHOP)	SHOP 1	34	106	S-W4-F44ILL-W	4' Wraparound Surface Mounted Fluorescent. (4) 48", T-8 lamp, Instant Start Ballast, NLO (BF: .85-.95) Acrylic Wrap-Around Diffuser	34	60	LEDT8 LEDT8/4/15W/4	Surface Mounted T8 LED Retrofit Lamp with External Driver LED 4' T8 Lamp (4) 15W Lamps	2200	CLASS	3.618	2.040	7958.72	4488.00
315	LEONARD BUILDING	1ST FLOOR (MACHINE SHOP)	SHOP 1	4	68	S-IND4-F42EE-NL	4' Industrial Surface Mounted Fluorescent, (2) 48", ES lamp (No Diffuser)	4	30	LEDT8 LEDT8/4/15W/2	Surface Mounted T8 LED Retrofit Lamp with External Driver LED 4' T8 Lamp (2) 15W Lamps	2200	CLASS	0.274	0.120	601.92	264.00
316	LEONARD BUILDING	1ST FLOOR (HVAC SHOP)	OFFICE 2	3	56	S-W4-F42ILL-W	4' Wraparound Surface Mounted Fluorescent, (2) 48", T-8 lamp, Instant Start Ballast, NLO (BF: .85-.95) Acrylic Wrap-Around Diffuser	3	30	LEDT8 LEDT8/4/15W/2	Surface Mounted T8 LED Retrofit Lamp with External Driver LED 4' T8 Lamp (2) 15W Lamps	2080	OFFICE	0.168	0.090	349.75	187.20
317	LEONARD BUILDING	1ST FLOOR (HVAC SHOP)	SHOP 2	45	106	PE-W4-F44ILL-W	4' Wraparound Pendant Mounted Fluorescent, (4) 48", T-8 lamp, Instant Start Ballast, NLO (BF: .85-.95) Acrylic Wrap-Around Diffuser	45	60	LEDT8 LEDT8/4/15W/4	Pendant Mounted T8 LED Retrofit Lamp with External Driver LED 4' T8 Lamp (4) 15W Lamps	2200	CLASS	4.769	2.700	10533.60	5940.00
318	LEONARD BUILDING	1ST FLOOR (HVAC SHOP)	SHOP 2	3	57	S-KLS-I60/1-NL	Bare-Lamp Keyless Socket Surface Mounted Incandescent, (1) 60W lamp (No Diffuser)	3	11	LEOSVA LEDS11/1	Surface Mounted Install LED Screw-in A-Style Lamp Light Emitting Diode Lamp, Screw-in, (1) 11W lamp	2200	CLASS	0.171	0.033	376.20	72.60
319	LEONARD BUILDING	1ST FLOOR (HVAC SHOP)	SHOP 2	4	106	C-2X4-F44ILL-MC	2'x4' Troffer Cable Mounted Fluorescent, (4) 48", T-8 lamp, Instant Start Ballast, NLO (BF: .85-.95) Microcell Diffuser	4	30	CK2x4 LEDT8/4/15W/2	Cable Mounted Install 2x4 2-Lamp Centering Kit LED 4' T8 Lamp (2) 15W Lamps	2200	CLASS	0.426	0.120	936.32	264.00
320	LEONARD BUILDING	1ST FLOOR (HVAC SHOP)	SHOP 2	4	106	R-2X4-F44ILL-PR	2'x4' Troffer Recessed Fluorescent, (4) 48", T-8 lamp, Instant Start Ballast, NLO (BF: .85-.95) Prismatic Acrylic Diffuser	4	30	CK2x4 LEDT8/4/15W/2	Recessed Install 2x4 2-Lamp Centering Kit LED 4' T8 Lamp (2) 15W Lamps	2200	CLASS	0.426	0.120	936.32	264.00
321	LEONARD BUILDING	1ST FLOOR (HVAC SHOP)	SHOP 3	5	106	S-W4-F44ILL-W	4' Wraparound Surface Mounted Fluorescent. (4) 48", T-8 lamp, Instant Start Ballast, NLO (BF: .85-.95) Acrylic Wrap-Around Diffuser	5	60	LEDT8 LEDT8/4/15W/4	Surface Mounted T8 LED Retrofit Lamp with External Driver LED 4' T8 Lamp (4) 15W Lamps	2200	CLASS	0.532	0.300	1170.40	660.00
322	LEONARD BUILDING	1ST FLOOR (HVAC SHOP)	SHOP 3 - DECK	8	68	C-IND4-F42EE-NL	4' Industrial Cable Mounted Fluorescent, (2) 48", ES lamp (No Diffuser)	8	30	LEDT8 LEDT8/4/15W/2	Cable Mounted T8 LED Retrofit Lamp with External Driver LED 4' T8 Lamp (2) 15W Lamps	2200	CLASS	0.547	0.240	1203.84	528.00
323	LEONARD BUILDING	1ST FLOOR (HVAC SHOP)	SHOP 3	11	280	PE-H8-MH250/1-PR	High-Bay Pendant Mounted Metal Halide, (1) 250W lamp Prismatic Acrylic Diffuser	11	54	LEDSI/COB LEDS54/1	Pendant Mounted Chip On Board (COB) Type Screw-in / Bypass Existing Ballast Light Emitting Diode Lamp, Screw-in, (1) 54W lamp - HIGH	2200	CLASS	3.083	0.594	6782.05	1306.80
324	LEONARD BUILDING	1ST FLOOR (HVAC SHOP)	SHOP 3 COMP	6	85	R-2X4-F43ILL-DCP	2'x4' Troffer Recessed Fluorescent, (3) 48", T-8 lamp, Instant Start Ballast, NLO (BF: .85-.95) Deep Cell Parabolic Diffuser	6	45	LEDT8 LEDT8/4/15W/3	Recessed T8 LED Retrofit Lamp with External Driver LED 4' T8 Lamp (3) 15W Lamps	2200	CLASS	0.507	0.270	1116.06	594.00
325	LEONARD BUILDING	1ST FLOOR (HVAC SHOP)	RESTROOM	2	68	S-S4-F42EE-NL	4' Strip Surface Mounted Fluorescent, (2) 48", ES lamp (No Diffuser)	2	30	LEDT8 LEDT8/4/15W/2	Surface Mounted T8 LED Retrofit Lamp with External Driver LED 4' T8 Lamp (2) 15W Lamps	2160	RESTROOM	0.137	0.060	295.49	129.60
326	KREIDER BUILDING	ALL AREAS	STAIRWELL	6	56	S-W4-F42ILL-W	4' Wraparound Surface Mounted Fluorescent, (2) 48", T-8 lamp, Instant Start Ballast, NLO (BF: .85-.95) Acrylic Wrap-Around Diffuser	6	30	LEDT8 LEDT8/4/15W/2	Surface Mounted T8 LED Retrofit Lamp with External Driver LED 4' T8 Lamp (2) 15W Lamps	8760	EMERG	0.336	0.180	2945.99	1576.80
327	KREIDER BUILDING	2ND FLOOR	COMPUTER CLASSROOM	9	106	R-2X4-F44ILL-PR	2'x4' Troffer Recessed Fluorescent, (4) 48", T-8 lamp, Instant Start Ballast, NLO (BF: .85-.95) Prismatic Acrylic Diffuser	9	30	CK2x4 LEDT8/4/15W/2	Recessed Install 2x4 2-Lamp Centering Kit LED 4' T8 Lamp (2) 15W Lamps	2200	CLASS	0.958	0.270	2106.72	594.00
328	KREIDER BUILDING	2ND FLOOR	HALLWAY	15	56	S-W4-F42ILL-W	4' Wraparound Surface Mounted Fluorescent, (2) 48", T-8 lamp, Instant Start Ballast, NLO (BF: .85-.95) Acrylic Wrap-Around Diffuser	15	30	LEDT8 LEDT8/4/15W/2	Surface Mounted T8 LED Retrofit Lamp with External Driver LED 4' T8 Lamp (2) 15W Lamps	2520	CORR	0.841	0.450	2118.69	1134.00
329	KREIDER BUILDING	2ND FLOOR	CLASSROOM 223	14	106	R-2X4-F44ILL-PR	2'x4' Troffer Recessed Fluorescent, (4) 48", T-8 lamp, Instant Start Ballast, NLO (BF: .85-.95) Prismatic Acrylic Diffuser	14	30	CK2x4 LEDT8/4/15W/2	Recessed Install 2x4 2-Lamp Centering Kit LED 4' T8 Lamp (2) 15W Lamps	2200	CLASS	1.490	0.420	3277.12	924.00
330	KREIDER BUILDING	2ND FLOOR	CLASSROOM 222	20	106	R-2X4-F44ILL-PR	2'x4' Troffer Recessed Fluorescent, (4) 48", T-8 lamp, Instant Start Ballast, NLO (BF: .85-.95) Prismatic Acrylic Diffuser	20	30	CK2x4 LEDT8/4/15W/2	Recessed Install 2x4 2-Lamp Centering Kit LED 4' T8 Lamp (2) 15W Lamps	2200	CLASS	2.128	0.600	4681.60	1320.00
331	KREIDER BUILDING	2ND FLOOR	STORAGE ROOM 220	4	56	R-2X4-F42ILL-PR	2'x4' Troffer Recessed Fluorescent, (2) 48", T-8 lamp, Instant Start Ballast, NLO (BF: .85-.95) Prismatic Acrylic Diffuser	4	30	LEDT8 LEDT8/4/15W/2	Recessed T8 LED Retrofit Lamp with External Driver LED 4' T8 Lamp (2) 15W Lamps	540	STORAGE	0.224	0.120	121.07	64.80
332	KREIDER BUILDING	2ND FLOOR	OFFICE 219	4	106	S-W4-F44ILL-W	4' Wraparound Surface Mounted Fluorescent, (4) 48", T-8 lamp, Instant Start Ballast, NLO (BF: .85-.95) Acrylic Wrap-Around Diffuser	4	30	CKW42 LEDT8/4/15W/2	Surface Mounted Install 4' Wrap Centering Kit LED 4' T8 Lamp (2) 15W Lamps	2080	OFFICE	0.426	0.120	885.25	249.60
333	KREIDER BUILDING	2ND FLOOR	MENS RESTROOM	2	56	S-W4-F42ILL-W	4' Wraparound Surface Mounted Fluorescent, (2) 48", T-8 lamp, Instant Start Ballast, NLO (BF: .85-.95) Acrylic Wrap-Around Diffuser	2	30	CKW42 LEDT8/4/15W/2	Surface Mounted Install 4' Wrap Centering Kit LED 4' T8 Lamp (2) 15W Lamps	2160	RESTROOM	0.112	0.060	242.14	129.60
334	KREIDER BUILDING	2ND FLOOR	ADA RESTROOM	1	56	S-W4-F42ILL-W	4' Wraparound Surface Mounted Fluorescent, (2) 48", T-8 lamp, Instant Start Ballast, NLO (BF: .85-.95) Acrylic Wrap-Around Diffuser	1	30	CKW42 LEDT8/4/15W/2	Surface Mounted Install 4' Wrap Centering Kit LED 4' T8 Lamp (2) 15W Lamps	1040	PRIV RESTROOM	0.056	0.030	58.29	31.20
335	KREIDER BUILDING	2ND FLOOR	WOMENS RESTROOM	2	56	S-W4-F42ILL-W	4' Wraparound Surface Mounted Fluorescent, (2) 48", T-8 lamp, Instant Start Ballast, NLO (BF: .85-.95) Acrylic Wrap-Around Diffuser	2	30	CKW42 LEDT8/4/15W/2	Surface Mounted Install 4' Wrap Centering Kit LED 4' T8 Lamp (2) 15W Lamps	2160	RESTROOM	0.112	0.060	242.14	129.60
[illegible]	KREIDER BUILDING	2ND FLOOR	ADA RESTROOM	1	56	S-W4-F42ILL-W	4' Wraparound Surface Mounted Fluorescent, (2) 48", T-8 lamp, Instant Start Ballast, NLO (BF: .85-.95) Acrylic Wrap-Around Diffuser	1	30	CKW42 LEDT8/4/15W/2	Surface Mounted Install 4' Wrap Centering Kit LED 4' T8 Lamp (2) 15W Lamps	1040	PRIV RESTROOM	0.056	0.030	58.29	31.20
337	KREIDER BUILDING	2ND FLOOR	CLASSROOM 209	14	106	R-2X4-F44ILL-PR	2'x4' Troffer Recessed Fluorescent, (4) 48", T-8 lamp, Instant Start Ballast, NLO (BF: .85-.95) Prismatic Acrylic Diffuser	14	30	CK2x4 LEDT8/4/15W/2	Recessed Install 2x4 2-Lamp Centering Kit LED 4' T8 Lamp (2) 15W Lamps	2200	CLASS	1.490	0.420	3277.12	924.00
338	KREIDER BUILDING	2ND FLOOR	CLASSROOM 209	1	56	R-2X4-F42ILL-PR	2'x4' Troffer Recessed Fluorescent, (2) 48", T-8 lamp, Instant Start Ballast, NLO (BF: .85-.95) Prismatic Acrylic Diffuser	1	30	CK2x4 LEDT8/4/15W/2	Recessed Install 2x4 2-Lamp Centering Kit LED 4' T8 Lamp (2) 15W Lamps	2200	CLASS	0.056	0.030	123.31	66.00
339	KREIDER BUILDING	2ND FLOOR	CLASSROOM 210	4	56	R-2X4-F42ILL-PR	2'x4' Troffer Recessed Fluorescent, (2) 48", T-8 lamp, Instant Start Ballast, NLO (BF: .85-.95) Prismatic Acrylic Diffuser	4	30	CK2x4 LEDT8/4/15W/2	Recessed Install 2x4 2-Lamp Centering Kit LED 4' T8 Lamp (2) 15W Lamps	2200	CLASS	0.224	0.120	493.24	264.00
340	KREIDER BUILDING	2ND FLOOR	CLASSROOM 211	4	56	R-2X4-F42ILL-PR	2'x4' Troffer Recessed Fluorescent, (2) 48", T-8 lamp, Instant Start Ballast, NLO (BF: .85-.95) Prismatic Acrylic Diffuser	4	30	CK2x4 LEDT8/4/15W/2	Recessed Install 2x4 2-Lamp Centering Kit LED 4' T8 Lamp (2) 15W Lamps	2200	CLASS	0.224	0.120	493.24	264.00
341	KREIDER BUILDING	2ND FLOOR	LOUNGE 208	6	85	R-2X4-F43ILL-PR	2'x4' Troffer Recessed Fluorescent, (3) 48", T-8 lamp, Instant Start Ballast, NLO (BF: .85-.95) Prismatic Acrylic Diffuser	6	30	CK2x4 LEDT8/4/15W/2	Recessed Install 2x4 2-Lamp Centering Kit LED 4' T8 Lamp (2) 15W Lamps	2200	CLASS	0.507	0.180	1116.06	396.00
342	KREIDER BUILDING	2ND FLOOR	OFFICE 207	4	56	S-IND4-F42ILL-NL	4' Industrial Surface Mounted Fluorescent (2) 48", T-8 lamp, Instant Start Ballast, NLO (BF: .85-.95) (No Diffuser)	4	30	LEDT8 LEDT8/4/15W/2	Surface Mounted T8 LED Retrofit Lamp with External Driver LED 4' T8 Lamp (2) 15W Lamps	2080	OFFICE	0.224	0.120	466.34	249.60
343	KREIDER BUILDING	2ND FLOOR	COMPUTER CLASSROOM 203	27	85	R-2X4-F43ILL-DCP	2'x4' Troffer Recessed Fluorescent, (3) 48", T-8 lamp, Instant Start Ballast, NLO (BF: .85-.95) Deep Cell Parabolic Diffuser	27	45	LEDT8 LEDT8/4/15W/3	Recessed T8 LED Retrofit Lamp with External Driver LED 4' T8 Lamp (3) 15W Lamps	2200	CLASS	2.283	1.215	5022.27	2673.00
344	KREIDER BUILDING	2ND FLOOR	COMPUTER CLASSROOM 203	4	56	R-2X4-F42ILL-PR	2'x4' Troffer Recessed Fluorescent, (2) 48", T-8 lamp, Instant Start Ballast, NLO (BF: .85-.95) Prismatic Acrylic Diffuser	4	30	CK2x4 LEDT8/4/15W/2	Recessed Install 2x4 2-Lamp Centering Kit LED 4' T8 Lamp (2) 15W Lamps	2200	CLASS	0.224	0.120	493.24	264.00
345	KREIDER BUILDING	2ND FLOOR	SERVER ROOM 204	6	85	R-2X4-F43ILL-PR	2'x4' Troffer Recessed Fluorescent, (3) 48", T-8 lamp, Instant Start Ballast NLO (BF: .85-.95) Prismatic Acrylic Diffuser	6	30	CK2x4 LEDT8/4/15W/2	Recessed Install 2x4 2-Lamp Centering Kit LED 4' T8 Lamp (2) 15W Lamps	540	STORAGE	0.507	0.180	273.94	97.20
346	KREIDER BUILDING	2ND FLOOR	STORAGE ROOM 205	2	56	S-IND4-F42ILL-NL	4' Industrial Surface Mounted Fluorescent, (2) 48", T-8 lamp, Instant Start Ballast, NLO (BF: .85-.95) (No Diffuser)	2	30	LEDT8 LEDT8/4/15W/2	Surface Mounted T8 LED Retrofit Lamp with External Driver LED 4' T8 Lamp (2) 15W Lamps	540	STORAGE	0.112	0.060	60.53	32.40
347	KREIDER BUILDING	2ND FLOOR	STAIRWELL	6	56	S-W4-F42ILL-W	4' Wraparound Surface Mounted Fluorescent, (2) 48", T-8 lamp, Instant Start Ballast, NLO (BF: .85-.95) Acrylic Wrap-Around Diffuser	6	30	CKW42 LEDT8/4/15W/2	Surface Mounted Install 4' Wrap Centering Kit LED 4' T8 Lamp (2) 15W Lamps	8760	EMERG	0.336	0.180	2945.99	1576.80
348	KREIDER BUILDING	2ND FLOOR	CLASSROOM 206	9	85	R-2X4-F43ILL-PR	2'x4' Troffer Recessed Fluorescent, (3) 48", T-8 lamp, Instant Start Ballast, NLO (BF: .85-.95) Prismatic Acrylic Diffuser	9	30	CK2x4 LEDT8/4/15W/2	Recessed Install 2x4 2-Lamp Centering Kit LED 4' T8 Lamp (2) 15W Lamps	2200	CLASS	0.761	0.270	1674.09	594.00
349	KREIDER BUILDING	1ST FLOOR	HALLWAY	16	56	S-W4-F42ILL-W	4' Wraparound Surface Mounted Fluorescent, (2) 48", T-8 lamp, Instant Start Ballast, NLO (BF: .85-.95) Acrylic Wrap-Around Diffuser	16	30	CKW42 LEDT8/4/15W/2	Surface Mounted Install 4' Wrap Centering Kit LED 4' T8 Lamp (2) 15W Lamps	2520	CORR	0.897	0.480	2259.94	1209.60
350	KREIDER BUILDING	1ST FLOOR	COMPUTER CLASSROOM 105	29	106	R-2X4-F44ILL-PR	2'x4' Troffer Recessed Fluorescent, (4) 48", T-8 lamp, Instant Start Ballast, NLO (BF: .85-.95) Prismatic Acrylic Diffuser	29	30	CK2x4 LEDT8/4/15W/2	Recessed Install 2x4 2-Lamp Centering Kit LED 4' T8 Lamp (2) 15W Lamps	2200	CLASS	3.086	0.870	6788.32	1914.00
351	KREIDER BUILDING	1ST FLOOR	COMPUTER CLASSROOM 105	1	31	R-2X2-F22ILL-PR	2'x2' Troffer Recessed Fluorescent, (2) 24", T-8 lamp, Instant Start Ballast, NLO (BF: .85-.95) Prismatic Acrylic Diffuser	1	20	LEDT8 LEDT8/2/10W/2	Recessed T8 LED Retrofit Lamp with External Driver LED 2' T8 Lamp (2) 10W Lamps	2200	CLASS	0.031	0.020	68.97	44.00
352	KREIDER BUILDING	1ST FLOOR	STORAGE ROOM 104	6	56	S-IND4-F42ILL-NL	4' Industrial Surface Mounted Fluorescent (2) 48", T-8 lamp, Instant Start Ballast, NLO (BF: .85-.95) (No Diffuser)	6	30	LEDT8 LEDT8/4/15W/2	Surface Mounted T8 LED Retrofit Lamp with External Driver LED 4' T8 Lamp (2) 15W Lamps	540	STORAGE	0.336	0.180	181.60	97.20
353	KREIDER BUILDING	1ST FLOOR	OFFICE 107	6	85	R-2X4-F43ILL-PR	2'x4' Troffer Recessed Fluorescent, (3) 48", T-8 lamp, Instant Start Ballast, NLO (BF: .85-.95) Prismatic Acrylic Diffuser	6	30	CK2x4 LEDT8/4/15W/2	Recessed Install 2x4 2-Lamp Centering Kit LED 4' T8 Lamp (2) 15W Lamps	2080	OFFICE	0.507	0.180	1055.18	374.40
354	KREIDER BUILDING	1ST FLOOR	CLASSROOM 103	10	85	R-2X4-F43ILL-PR	2'x4' Troffer Recessed Fluorescent, (3) 48", T-8 lamp, Instant Start Ballast, NLO (BF: .85-.95) Prismatic Acrylic Diffuser	10	30	CK2x4 LEDT8/4/15W/2	Recessed Install 2x4 2-Lamp Centering Kit LED 4' T8 Lamp (2) 15W Lamps	2200	CLASS	0.846	0.300	1860.10	660.00
355	KREIDER BUILDING	1ST FLOOR	CLASSROOM 103	1	31	R-2X2-F22ILL-PR	2'x2' Troffer Recessed Fluorescent, (2) 24", T-8 lamp, Instant Start Ballast, NLO (BF: .85-.95) Prismatic Acrylic Diffuser	1	20	LEDT8 LEDT8/2/10W/2	Recessed T8 LED Retrofit Lamp with External Driver LED 2' T8 Lamp (2) 10W Lamps	2200	CLASS	0.031	0.020	68.97	44.00
356	KREIDER BUILDING	1ST FLOOR	MENS RESTROOM	2	56	S-W4-F42ILL-W	4' Wraparound Surface Mounted Fluorescent, (2) 48", T-8 lamp, Instant Start Ballast, NLO (BF: .85-.95) Acrylic Wrap-Around Diffuser	2	30	CKW42 LEDT8/4/15W/2	Surface Mounted Install 4' Wrap Centering Kit LED 4' T8 Lamp (2) 15W Lamps	2160	RESTROOM	0.112	0.060	242.14	129.60
357	KREIDER BUILDING	1ST FLOOR	ADA RESTROOM	1	56	S-W4-F42ILL-W	4' Wraparound Surface Mounted Fluorescent, (2) 48", T-8 lamp, Instant Start Ballast, NLO (BF: .85-.95) Acrylic Wrap-Around Diffuser	1	30	CKW42 LEDT8/4/15W/2	Surface Mounted Install 4' Wrap Centering Kit LED 4' T8 Lamp (2) 15W Lamps	1040	PRIV RESTROOM	0.056	0.030	58.29	31.20
358	KREIDER BUILDING	1ST FLOOR	WOMENS RESTROOM	2	56	S-W4-F42ILL-W	4' Wraparound Surface Mounted Fluorescent, (2) 48", T-8 lamp, Instant Start Ballast, NLO (BF: .85-.95) Acrylic Wrap-Around Diffuser	2	30	CKW42 LEDT8/4/15W/2	Surface Mounted Install 4' Wrap Centering Kit LED 4' T8 Lamp (2) 15W Lamps	2160	RESTROOM	0.112	0.060	242.14	129.60
359	KREIDER BUILDING	1ST FLOOR	ADA RESTROOM	1	56	S-W4-F42ILL-W	4' Wraparound Surface Mounted Fluorescent, (2) 48", T-8 lamp, Instant Start Ballast, NLO (BF: .85-.95) Acrylic Wrap-Around Diffuser	1	30	CKW42 LEDT8/4/15W/2	Surface Mounted Install 4' Wrap Centering Kit LED 4' T8 Lamp (2) 15W Lamps	1040	PRIV RESTROOM	0.056	0.030	58.29	31.20
[illegible]	KREIDER BUILDING	1ST FLOOR	OFFICE 116	2	106	R-2X4-F44ILL-PR	2'x4' Troffer Recessed Fluorescent, (4) 48", T-8 lamp, Instant Start Ballast, NLO (BF: .85-.95) Prismatic Acrylic Diffuser	2	30	CK2x4 LEDT8/4/15W/2	Recessed Install 2x4 2-Lamp Centering Kit LED 4' T8 Lamp (2) 15W Lamps	2080	OFFICE	0.213	0.060	442.62	124.80
361	KREIDER BUILDING	1ST FLOOR	OFFICE 115	4	85	R-2X4-F43ILL-PR	2'x4' Troffer Recessed Fluorescent, (3) 48", T-8 lamp, Instant Start Ballast, NLO (BF: .85-.95) Prismatic Acrylic Diffuser	4	30	CK2x4 LEDT8/4/15W/2	Recessed Install 2x4 2-Lamp Centering Kit LED 4' T8 Lamp (2) 15W Lamps	2080	OFFICE	0.338	0.120	703.46	249.60
362	KREIDER BUILDING	1ST FLOOR	SERVER ROOM	3	56	S-IND4-F42ILL-NL	4' Industrial Surface Mounted Fluorescent. (2) 48", T-8 lamp. Instant Start Ballast, NLO (BF: .85-.95) (No Diffuser)	3	30	LEDT8 LEDT8/4/15W/2	Surface Mounted T8 LED Retrofit Lamp with External Driver LED 4' T8 Lamp (2) 15W Lamps	540	STORAGE	0.168	0.090	90.80	48.60

Line #	Facility	Area	Space	Pre Fixture Qty	Pre Wattage	Pre Code	Pre Description	Post Fixture Qty	Post Wattage	Post Code	Post Description	Hours Pre	Hours Code	Base kW	Retro Proposed kW	Base kWh	Retro Proposed kWh
363	KREIDER BUILDING	1ST FLOOR	OFFICE 113	2	56	R-2X4-F42ILL-PR	2'x4' Troffer Recessed Fluorescent, (2) 48", T-8 lamp, Instant Start Ballast, NLO (BF: .85-.95) Prismatic Acrylic Diffuser	2	30	CK2x4 LEDT8/4/15W/2	Recessed Install 2x4 2-Lamp Centering Kit LED 4' T8 Lamp (2) 15W Lamps	2080	OFFICE	0.112	0.060	233.17	124.80
364	KREIDER BUILDING	1ST FLOOR	HALLWAY	3	56	R-2X4-F42ILL-PR	2'x4' Troffer Recessed Fluorescent, (2) 48", T-8 lamp, Instant Start Ballast, NLO (BF: .85-.95) Prismatic Acrylic Diffuser	3	30	CK2x4 LEDT8/4/15W/2	Recessed Install 2x4 2-Lamp Centering Kit LED 4' T8 Lamp (2) 15W Lamps	2520	CORR	0.168	0.090	423.74	226.8[illegible]
365	KREIDER BUILDING	1ST FLOOR	STAIRWELL TO BASEMENT	1	56	S-W4-F42ILL-W	4' Wraparound Surface Mounted Fluorescent, (2) 48", T-8 lamp, Instant Start Ballast, NLO (BF: .85-.95) Acrylic Wrap-Around Diffuser	1	30	CKW42 LEDT8/4/15W/2	Surface Mounted Install 4' Wrap Centering Kit LED 4' T8 Lamp (2) 15W Lamps	8760	EMERG	0.056	0.030	491.00	262
366	KREIDER BUILDING	BASEMENT	BASEMENT	8	56	S-W4-F42ILL-W	4' Wraparound Surface Mounted Fluorescent, (2) 48", T-8 lamp, Instant Start Ballast, NLO (BF: .85-.95) Acrylic Wrap-Around Diffuser	8	30	CKW42 LEDT8/4/15W/2	Surface Mounted Install 4' Wrap Centering Kit LED 4' T8 Lamp (2) 15W Lamps	540	STORAGE	0.448	0.240	242.14	129.60
367	KREIDER BUILDING	1ST FLOOR	CLASSROOM 121	24	106	R-2X4-F44ILL-PR	2'x4' Troffer Recessed Fluorescent, (4) 48", T-8 lamp, Instant Start Ballast, NLO (BF: .85-.95) Prismatic Acrylic Diffuser	24	30	CK2x4 LEDT8/4/15W/2	Recessed Install 2x4 2-Lamp Centering Kit LED 4' T8 Lamp (2) 15W Lamps	2200	CLASS	2.554	0.720	5617.92	1584.00
368	KREIDER BUILDING	1ST FLOOR	CLASSROOM 120	3	56	S-IND4-F42ILL-NL	4' Industrial Surface Mounted Fluorescent, (2) 48", T-8 lamp, Instant Start Ballast, NLO (BF: .85-.95) (No Diffuser)	3	30	LEDT8 LEDT8/4/15W/2	Surface Mounted T8 LED Retrofit Lamp with External Driver LED 4' T8 Lamp (2) 15W Lamps	2200	CLASS	0.168	0.090	369.93	198.00
369	KREIDER BUILDING	1ST FLOOR	CLASSROOM 103	9	85	R-2X4-F43ILL-PR	2'x4' Troffer Recessed Fluorescent, (3) 48", T-8 lamp, Instant Start Ballast, NLO (BF: .85-.95) Prismatic Acrylic Diffuser	9	30	CK2x4 LEDT8/4/15W/2	Recessed Install 2x4 2-Lamp Centering Kit LED 4' T8 Lamp (2) 15W Lamps	2200	CLASS	0.761	0.270	1674.09	594.00
370	KREIDER BUILDING	1ST FLOOR	CLASSROOM 103	1	31	R-2X2-F22ILL-PR	2'x2' Troffer Recessed Fluorescent, (2) 24", T-8 lamp, Instant Start Ballast, NLO (BF: .85-.95) Prismatic Acrylic Diffuser	1	20	LEDT8 LEDT8/2/10W/2	Recessed T8 LED Retrofit Lamp with External Driver LED 2' T8 Lamp (2) 10W Lamps	2200	CLASS	0.031	0.020	68.97	44.00
371	KREIDER BUILDING	1ST FLOOR	CLASSOOM MACHINE SHOP	12	85	R-2X4-F43ILL-PR	2'x4' Troffer Recessed Fluorescent, (3) 48", T-8 lamp, Instant Start Ballast, NLO (BF: .85-.95) Prismatic Acrylic Diffuser	12	30	CK2x4 LEDT8/4/15W/2	Recessed Install 2x4 2-Lamp Centering Kit LED 4' T8 Lamp (2) 15W Lamps	2200	CLASS	1.015	0.360	2232.12	792.00
372	BRENNER HALL	3RD FLOOR	HALLWAY	4	85	R-2X4-F43ILL-PR	2'x4' Troffer Recessed Fluorescent, (3) 48", T-8 lamp, Instant Start Ballast, NLO (BF: .85-.95) Prismatic Acrylic Diffuser	4	30	CK2x4 LEDT8/4/15W/2	Recessed Install 2x4 2-Lamp Centering Kit LED 4' T8 Lamp (2) 15W Lamps	2520	CORR	0.338	0.120	852.26	302.40
373	BRENNER HALL	3RD FLOOR	DORM ROOMS 301-306	5	56	S-W4-F42ILL-W	4' Wraparound Surface Mounted Fluorescent, (2) 48", T-8 lamp, Instant Start Ballast, NLO (BF: .85-.95) Acrylic Wrap-Around Diffuser	5	30	CKW42 LEDT8/4/15W/2	Surface Mounted Install 4' Wrap Centering Kit LED 4' T8 Lamp (2) 15W Lamps	1440	DORM	0.280	0.150	403.56	216.00
374	BRENNER HALL	3RD FLOOR	COMMUNITY RESTROOM 303	3	63	R-REC/6-CFQ26/2-GFRR	Recessed Can 6" Recessed Compact Fluorescent, quad, (2) 26W lamp Round Glass Fresnel Lens	3	63	N/R NONE	Recessed No Retrofit. To remain as is.	8760	EMERG	0.188	0.188	1647.76	1647.76
375	BRENNER HALL	3RD FLOOR	COMMUNITY RESTROOM 303	1	56	WM-VAN4-F42ILL-PR	4' Vanity Wall Mounted Fluorescent, (2) 48", T-8 lamp, Instant Start Ballast, NLO (BF: .85-.95) Prismatic Acrylic Diffuser	1	30	LEDT8 LEDT8/4/15W/2	Wall Mounted T8 LED Retrofit Lamp with External Driver LED 4' T8 Lamp (2) 15W Lamps	8760	EMERG	0.056	0.030	491.00	262.80
376	BRENNER HALL	2ND FLOOR	HALLWAY	4	85	R-2X4-F43ILL-PR	2'x4' Troffer Recessed Fluorescent, (3) 48", T-8 lamp, Instant Start Ballast, NLO (BF: .85-.95) Prismatic Acrylic Diffuser	4	30	CK2x4 LEDT8/4/15W/2	Recessed Install 2x4 2-Lamp Centering Kit LED 4' T8 Lamp (2) 15W Lamps	2520	CORR	0.338	0.120	852.26	302.40
377	BRENNER HALL	2ND FLOOR	DORM ROOM 201-210	10	85	R-2X4-F43ILL-PR	2'x4' Troffer Recessed Fluorescent, (3) 48", T-8 lamp, Instant Start Ballast, NLO (BF: .85-.95) Prismatic Acrylic Diffuser	10	30	CK2x4 LEDT8/4/15W/2	Recessed Install 2x4 2-Lamp Centering Kit LED 4' T8 Lamp (2) 15W Lamps	1440	DORM	0.846	0.300	1217.52	432.00
378	BRENNER HALL	2ND FLOOR	STORAGE ROOM 208	1	85	R-2X4-F43ILL-PR	2'x4' Troffer Recessed Fluorescent, (3) 48", T-8 lamp, Instant Start Ballast, NLO (BF: .85-.95) Prismatic Acrylic Diffuser	1	30	CK2x4 LEDT8/4/15W/2	Recessed Install 2x4 2-Lamp Centering Kit LED 4' T8 Lamp (2) 15W Lamps	540	STORAGE	0.085	0.030	45.66	16.20
379	BRENNER HALL	2ND FLOOR	COMMUNITY RESTROOM 206	1	63	R-REC/6-CFQ26/2-GFRR	Recessed Can 6" Recessed Compact Fluorescent, quad, (2) 26W lamp Round Glass Fresnel Lens	1	63	N/R NONE	Recessed No Retrofit To remain as is	8760	EMERG	0.063	0.063	549.25	549.25
380	BRENNER HALL	2ND FLOOR	COMMUNITY RESTROOM 206	2	56	R-1X4-F42ILL-PR	1'x4' Troffer Recessed Fluorescent, (2) 48", T-8 lamp, Instant Start Ballast, NLO (BF: .85-.95) Prismatic Acrylic Diffuser	2	30	LEDT8 LEDT8/4/15W/2	Recessed T8 LED Retrofit Lamp with External Driver LED 4' T8 Lamp (2) 15W Lamps	8760	EMERG	0.112	0.060	982.00	525.60
381	BRENNER HALL	2ND FLOOR	COMMUNITY RESTROOM 206	2	56	R-S4-F42ILL-PR	4' Strip Recessed Fluorescent, (2) 48", T-8 lamp, Instant Start Ballast, NLO (BF: .85-.95) Prismatic Acrylic Diffuser	2	30	LEDT8 LEDT8/4/15W/2	Recessed T8 LED Retrofit Lamp with External Driver LED 4' T8 Lamp (2) 15W Lamps	8760	EMERG	0.112	0.060	982.00	525.60
382	BRENNER HALL	1ST FLOOR	HALLWAY	4	85	R-2X4-F43ILL-PR	2'x4' Troffer Recessed Fluorescent, (3) 48", T-8 lamp, Instant Start Ballast, NLO (BF: .85-.95) Prismatic Acrylic Diffuser	4	30	CK2x4 LEDT8/4/15W/2	Recessed Install 2x4 2-Lamp Centering Kit LED 4' T8 Lamp (2) 15W Lamps	2520	CORR	0.338	0.120	852.26	302.40
383	BRENNER HALL	1ST FLOOR	DORM ROOM 101-105	6	85	R-2X4-F43ILL-PR	2'x4' Troffer Recessed Fluorescent, (3) 48", T-8 lamp, Instant Start Ballast, NLO (BF: .85-.95) Prismatic Acrylic Diffuser	6	30	CK2x4 LEDT8/4/15W/2	Recessed Install 2x4 2-Lamp Centering Kit LED 4' T8 Lamp (2) 15W Lamps	1440	DORM	0.507	0.180	730.51	259.20
384	BRENNER HALL	1ST FLOOR	STORAGE / CUSTODIAL ROOM 103	1	85	R-2X4-F43ILL-PR	2'x4' Troffer Recessed Fluorescent, (3) 48", T-8 lamp, Instant Start Ballast, NLO (BF: .85-.95) Prismatic Acrylic Diffuser	1	30	CK2x4 LEDT8/4/15W/2	Recessed Install 2x4 2-Lamp Centering Kit LED 4' T8 Lamp (2) 15W Lamps	720	JC	0.085	0.030	60.88	21.60
385	BRENNER HALL	1ST FLOOR	SERVER / TELEPHONE ROOM 109	1	56	S-W4-F42ILL-W	4' Wraparound Surface Mounted Fluorescent, (2) 48", T-8 lamp, Instant Start Ballast, NLO (BF: .85-.95) Acrylic Wrap-Around Diffuser	1	30	CKW42 LEDT8/4/15W/2	Surface Mounted Install 4' Wrap Centering Kit LED 4' T8 Lamp (2) 15W Lamps	540	STORAGE	0.056	0.030	30.27	16.20
386	BRENNER HALL	1ST FLOOR	HALLWAY RESTROOM 108	1	56	S-W4-F42ILL-W	4' Wraparound Surface Mounted Fluorescent, (2) 48", T-8 lamp, Instant Start Ballast, NLO (BF: .85-.95) Acrylic Wrap-Around Diffuser	1	30	CKW42 LEDT8/4/15W/2	Surface Mounted Install 4' Wrap Centering Kit LED 4' T8 Lamp (2) 15W Lamps	1040	PRIV RESTROOM	0.056	0.030	58.29	31.20
387	BRENNER HALL	1ST FLOOR	NURSES OFFICE	6	85	R-2X4-F43ILL-W	2'x4' Troffer Recessed Fluorescent, (3) 48", T-8 lamp, Instant Start Ballast, NLO (BF: .85-.95) Acrylic Wrap-Around Diffuser	6	45	LEDT8 LEDT8/4/15W/3	Recessed T8 LED Retrofit Lamp with External Driver LED 4' T8 Lamp (3) 15W Lamps	2080	OFFICE	0.507	0.270	1055.18	561.60
388	BRENNER HALL	ALL AREAS	STAIRWELL 1	4	106	S-W4-F44ILL-W	4' Wraparound Surface Mounted Fluorescent, (4) 48", T-8 lamp, Instant Start Ballast, NLO (BF: .85-.95) Acrylic Wrap-Around Diffuser	4	30	CKW42 LEDT8/4/15W/2	Surface Mounted Install 4' Wrap Centering Kit LED 4' T8 Lamp (2) 15W Lamps	8760	EMERG	0.426	0.120	3728.26	1051
389	BRENNER HALL	ALL AREAS	STAIRWELL 2	4	106	S-W4-F44ILL-W	4' Wraparound Surface Mounted Fluorescent, (4) 48", T-8 lamp, Instant Start Ballast, NLO (BF: .85-.95) Acrylic Wrap-Around Diffuser	4	30	CKW42 LEDT8/4/15W/2	Surface Mounted Install 4' Wrap Centering Kit LED 4' T8 Lamp (2) 15W Lamps	8760	EMERG	0.426	0.120	3728.26	1051.[illegible]
390	BOURNE HALL	2ND FLOOR	HALLWAY	6	56	S-W4-F42ILL-W	4' Wraparound Surface Mounted Fluorescent, (2) 48", T-8 lamp, Instant Start Ballast, NLO (BF: .85-.95) Acrylic Wrap-Around Diffuser	6	30	LEDT8 LEDT8/4/15W/2	Surface Mounted T8 LED Retrofit Lamp with External Driver LED 4' T8 Lamp (2) 15W Lamps	2520	CORR	0.336	0.180	847.48	453.60
391	BOURNE HALL	2ND FLOOR	DORM ROOMS 201-209	9	56	S-W4-F42ILL-W	4' Wraparound Surface Mounted Fluorescent, (2) 48", T-8 lamp, Instant Start Ballast, NLO (BF: .85-.95) Acrylic Wrap-Around Diffuser	9	30	LEDT8 LEDT8/4/15W/2	Surface Mounted T8 LED Retrofit Lamp with External Driver LED 4' T8 Lamp (2) 15W Lamps	1440	DORM	0.504	0.270	726.41	388.80
392	BOURNE HALL	2ND FLOOR	RA APARTMENT	4	56	S-W4-F42ILL-W	4' Wraparound Surface Mounted Fluorescent, (2) 48", T-8 lamp, Instant Start Ballast, NLO (BF: .85-.95) Acrylic Wrap-Around Diffuser	4	30	LEDT8 LEDT8/4/15W/2	Surface Mounted T8 LED Retrofit Lamp with External Driver LED 4' T8 Lamp (2) 15W Lamps	1440	DORM	0.224	0.120	322.85	172.80
393	BOURNE HALL	2ND FLOOR	CUSTODIAL CLOSET	1	22	WM-JJ-CFS23/1-JJG	Jelly Jar Wall Mounted Compact Fluorescent, spiral, (1) 23W lamp Glass Jelly Jar	1	22	N/R NONE	Wall Mounted No Retrofit. To remain as is.	720	JC	0.022	0.022	15.73	15.73
394	BOURNE HALL	2ND FLOOR	COMMUNITY RESTROOM 216	2	85	FL-2X4-F43ILL-PR	2'x4' Troffer Recessed Flanged Fluorescent, (3) 48", T-8 lamp, Instant Start Ballast, NLO (BF: .85-.95) Prismatic Acrylic Diffuser	2	30	CK2x4 LEDT8/4/15W/2	Recessed Flanged Install 2x4 2-Lamp Centering Kit LED 4' T8 Lamp (2) 15W Lamps	8760	EMERG	0.169	0.060	1481.32	525.60
395	BOURNE HALL	2ND FLOOR	COMMUNITY RESTROOM 216	1	56	WM-VAN4-F42ILL-PR	4' Vanity Wall Mounted Fluorescent, (2) 48", T-8 lamp, Instant Start Ballast, NLO (BF: .85-.95) Prismatic Acrylic Diffuser	1	30	LEDT8 LEDT8/4/15W/2	Wall Mounted T8 LED Retrofit Lamp with External Driver LED 4' T8 Lamp (2) 15W Lamps	8760	EMERG	0.056	0.030	491.00	262.80
396	BOURNE HALL	1ST FLOOR	HALLWAY	6	56	S-W4-F42ILL-W	4' Wraparound Surface Mounted Fluorescent, (2) 48", T-8 lamp, Instant Start Ballast, NLO (BF: .85-.95) Acrylic Wrap-Around Diffuser	6	30	LEDT8 LEDT8/4/15W/2	Surface Mounted T8 LED Retrofit Lamp with External Driver LED 4' T8 Lamp (2) 15W Lamps	2520	CORR	0.336	0.180	847.48	453.60
397	BOURNE HALL	1ST FLOOR	DORM ROOMS 101-113	13	56	S-W4-F42ILL-W	4' Wraparound Surface Mounted Fluorescent, (2) 48", T-8 lamp, Instant Start Ballast, NLO (BF: .85-.95) Acrylic Wrap-Around Diffuser	13	30	LEDT8 LEDT8/4/15W/2	Surface Mounted T8 LED Retrofit Lamp with External Driver LED 4' T8 Lamp (2) 15W Lamps	1440	DORM	0.729	0.390	1049.26	561.60
398	BOURNE HALL	1ST FLOOR	CUSTODIAL CLOSET	1	22	WM-JJ-CFS23/1-JJG	Jelly Jar Wall Mounted Compact Fluorescent, spiral, (1) 23W lamp Glass Jelly Jar	1	22	N/R NONE	Wall Mounted No Retrofit To remain as is.	720	JC	0.022	0.022	15.73	15.73
399	BOURNE HALL	1ST FLOOR	COMMUNITY RESTROOM 116	2	85	FL-2X4-F43ILL-PR	2'x4' Troffer Recessed Flanged Fluorescent, (3) 48", T-8 lamp, Instant Start Ballast, NLO (BF: .85-.95) Prismatic Acrylic Diffuser	2	30	CK2x4 LEDT8/4/15W/2	Recessed Flanged Install 2x4 2-Lamp Centering Kit LED 4' T8 Lamp (2) 15W Lamps	8760	EMERG	0.169	0.060	1481.32	525.60
400	BOURNE HALL	1ST FLOOR	COMMUNITY RESTROOM 116	1	56	WM-VAN4-F42ILL-PR	4' Vanity Wall Mounted Fluorescent, (2) 48", T-8 lamp, Instant Start Ballast, NLO (BF: .85-.95) Prismatic Acrylic Diffuser	1	30	LEDT8 LEDT8/4/15W/2	Wall Mounted T8 LED Retrofit Lamp with External Driver LED 4' T8 Lamp (2) 15W Lamps	8760	EMERG	0.056	0.030	491.00	262.80
401	BOURNE HALL	BASEMENT	HALLWAY	9	56	S-W4-F42ILL-W	4' Wraparound Surface Mounted Fluorescent, (2) 48", T-8 lamp, Instant Start Ballast, NLO (BF: .85-.95) Acrylic Wrap-Around Diffuser	9	30	LEDT8 LEDT8/4/15W/2	Surface Mounted T8 LED Retrofit Lamp with External Driver LED 4' T8 Lamp (2) 15W Lamps	2520	CORR	0.504	0.270	1271.21	680.40
402	BOURNE HALL	BASEMENT	LAUNDRY ROOM	1	56	S-W4-F42ILL-W	4' Wraparound Surface Mounted Fluorescent, (2) 48", T-8 lamp, Instant Start Ballast, NLO (BF: .85-.95) Acrylic Wrap-Around Diffuser	1	30	LEDT8 LEDT8/4/15W/2	Surface Mounted T8 LED Retrofit Lamp with External Driver LED 4' T8 Lamp (2) 15W Lamps	1440	DORM	0.056	0.030	80.71	43.20
403	BOURNE HALL	BASEMENT	RESTROOM	1	56	S-W4-F42ILL-W	4' Wraparound Surface Mounted Fluorescent, (2) 48", T-8 lamp, Instant Start Ballast, NLO (BF: .85-.95) Acrylic Wrap-Around Diffuser	1	30	LEDT8 LEDT8/4/15W/2	Surface Mounted T8 LED Retrofit Lamp with External Driver LED 4' T8 Lamp (2) 15W Lamps	1040	PRIV RESTROOM	0.056	0.030	58.29	31.20
404	BOURNE HALL	BASEMENT	CUSTODIAL STORAGE ROOM	2	56	S-W4-F42ILL-W	4' Wraparound Surface Mounted Fluorescent, (2) 48", T-8 lamp, Instant Start Ballast, NLO (BF: .85-.95) Acrylic Wrap-Around Diffuser	2	30	LEDT8 LEDT8/4/15W/2	Surface Mounted T8 LED Retrofit Lamp with External Driver LED 4' T8 Lamp (2) 15W Lamps	720	JC	0.112	0.060	80.71	43.20
405	BOURNE HALL	BASEMENT	DATA ROOM	2	56	S-W4-F42ILL-W	4' Wraparound Surface Mounted Fluorescent, (2) 48", T-8 lamp, Instant Start Ballast, NLO (BF: .85-.95) Acrylic Wrap-Around Diffuser	2	30	LEDT8 LEDT8/4/15W/2	Surface Mounted T8 LED Retrofit Lamp with External Driver LED 4' T8 Lamp (2) 15W Lamps	540	STORAGE	0.112	0.060	60.53	32.40
406	BOURNE HALL	BASEMENT	DORM ROOM 001-004	4	56	S-W4-F42ILL-W	4' Wraparound Surface Mounted Fluorescent, (2) 48", T-8 lamp, Instant Start Ballast, NLO (BF: .85-.95) Acrylic Wrap-Around Diffuser	4	30	LEDT8 LEDT8/4/15W/2	Surface Mounted T8 LED Retrofit Lamp with External Driver LED 4' T8 Lamp (2) 15W Lamps	1440	DORM	0.224	0.120	322.85	172.80
407	BOURNE HALL	BASEMENT	MECHANICAL ROOM	2	56	S-IND4-F42ILL-NL	4' Industrial Surface Mounted Fluorescent, (2) 48", T-8 lamp, Instant Start Ballast, NLO (BF: .85-.95) (No Diffuser)	2	30	LEDT8 LEDT8/4/15W/2	Surface Mounted T8 LED Retrofit Lamp with External Driver LED 4' T8 Lamp (2) 15W Lamps	540	STORAGE	0.112	0.060	60.53	32.40
408	BOURNE HALL	BASEMENT	UTILITY ROOM (MECH)	3	56	S-IND4-F42ILL-NL	4' Industrial Surface Mounted Fluorescent, (2) 48", T-8 lamp, Instant Start Ballast, NLO (BF: .85-.95) (No Diffuser)	3	30	LEDT8 LEDT8/4/15W/2	Surface Mounted T8 LED Retrofit Lamp with External Driver LED 4' T8 Lamp (2) 15W Lamps	540	STORAGE	0.168	0.090	90.80	48.60
409	BOURNE HALL	BASEMENT	STAIRWELL 1	5	56	S-W4-F42ILL-W	4' Wraparound Surface Mounted Fluorescent, (2) 48", T-8 lamp, Instant Start Ballast, NLO (BF: .85-.95) Acrylic Wrap-Around Diffuser	5	30	LEDT8 LEDT8/4/15W/2	Surface Mounted T8 LED Retrofit Lamp with External Driver LED 4' T8 Lamp (2) 15W Lamps	8760	EMERG	0.280	0.150	2454.99	1314.00
410	BOURNE HALL	BASEMENT	STAIRWELL 2	5	56	S-W4-F42ILL-W	4' Wraparound Surface Mounted Fluorescent, (2) 48", T-8 lamp, Instant Start Ballast, NLO (BF: .85-.95) Acrylic Wrap-Around Diffuser	5	30	LEDT8 LEDT8/4/15W/2	Surface Mounted T8 LED Retrofit Lamp with External Driver LED 4' T8 Lamp (2) 15W Lamps	8760	EMERG	0.280	0.150	2454.99	1314.00
411	METZGER HALL	2ND FLOOR	HALLWAY	6	56	S-W4-F42ILL-W	4' Wraparound Surface Mounted Fluorescent, (2) 48", T-8 lamp, Instant Start Ballast, NLO (BF: .85-.95) Acrylic Wrap-Around Diffuser	6	30	LEDT8 LEDT8/4/15W/2	Surface Mounted T8 LED Retrofit Lamp with External Driver LED 4' T8 Lamp (2) 15W Lamps	2520	CORR	0.336	0.180	847.48	453.60
412	METZGER HALL	2ND FLOOR	DORM ROOMS 201-209	9	56	S-W4-F42ILL-W	4' Wraparound Surface Mounted Fluorescent, (2) 48", T-8 lamp, Instant Start Ballast, NLO (BF: .85-.95) Acrylic Wrap-Around Diffuser	9	30	LEDT8 LEDT8/4/15W/2	Surface Mounted T8 LED Retrofit Lamp with External Driver LED 4' T8 Lamp (2) 15W Lamps	1440	DORM	0.504	0.270	726.41	388.
413	METZGER HALL	2ND FLOOR	RA APARTMENT	4	56	S-W4-F42ILL-W	4' Wraparound Surface Mounted Fluorescent, (2) 48", T-8 lamp, Instant Start Ballast, NLO (BF: .85-.95) Acrylic Wrap-Around Diffuser	4	30	LEDT8 LEDT8/4/15W/2	Surface Mounted T8 LED Retrofit Lamp with External Driver LED 4' T8 Lamp (2) 15W Lamps	1440	DORM	0.224	0.120	322.85	172.80
414	METZGER HALL	2ND FLOOR	CUSTODIAL CLOSET	1	22	WM-JJ-CFS23/1-JJG	Jelly Jar Wall Mounted Compact Fluorescent, spiral, (1) 23W lamp Glass Jelly Jar	1	22	N/R NONE	Wall Mounted No Retrofit. To remain as is.	720	JC	0.022	0.022	15.73	15.73

Line #	Facility	Area	Space	Pre Fixture Qty	Pre Wattage	Pre Code	Pre Description	Post Fixture Qty	Post Wattage	Post Code	Post Description	Hours Pre	Hours Code	Base kW	Retro Proposed kW	Base kWh	Retro Proposed kWh
415	METZGER HALL	2ND FLOOR	COMMUNITY RESTROOM 216	2	85	FL-2X4-F43ILL-PR	2'x4' Troffer Recessed Flanged Fluorescent, (3) 48", T-8 lamp, Instant Start Ballast, NLO (BF: .85-.95) Prismatic Acrylic Diffuser	2	30	CK2x4 LEDT8/4/15W/2	Recessed Flanged Install 2x4 2-Lamp Centering Kit LED 4' T8 Lamp (2) 15W Lamps	8760	EMERG	0.169	0.060	1481.32	525.60
416	METZGER HALL	2ND FLOOR	COMMUNITY RESTROOM 216	1	56	WM-VAN4-F42ILL-PR	4' Vanity Wall Mounted Fluorescent, (2) 48", T-8 lamp, Instant Start Ballast, NLO (BF: .85-.95) Prismatic Acrylic Diffuser	1	30	LEDT8 LEDT8/4/15W/2	Wall Mounted T8 LED Retrofit Lamp with External Driver LED 4' T8 Lamp (2) 15W Lamps	8760	EMERG	0.056	0.030	491.00	262.80
417	METZGER HALL	1ST FLOOR	HALLWAY	6	56	S-W4-F42ILL-W	4' Wraparound Surface Mounted Fluorescent, (2) 48", T-8 lamp, Instant Start Ballast, NLO (BF: .85-.95) Acrylic Wrap-Around Diffuser	6	30	LEDT8 LEDT8/4/15W/2	Surface Mounted T8 LED Retrofit Lamp with External Driver LED 4' T8 Lamp (2) 15W Lamps	2520	CORR	0.336	0.180	847.48	453.60
418	METZGER HALL	1ST FLOOR	DORM ROOMS 101-113	13	56	S-W4-F42ILL-W	4' Wraparound Surface Mounted Fluorescent, (2) 48", T-8 lamp, Instant Start Ballast, NLO (BF: .85-.95) Acrylic Wrap-Around Diffuser	13	30	LEDT8 LEDT8/4/15W/2	Surface Mounted T8 LED Retrofit Lamp with External Driver LED 4' T8 Lamp (2) 15W Lamps	1440	DORM	0.728	0.390	1049.26	561.60
419	METZGER HALL	1ST FLOOR	CUSTODIAL CLOSET	1	22	WM-JJ-CFS23/1-JJG	Jelly Jar Wall Mounted Compact Fluorescent, spiral, (1) 23W lamp Glass Jelly Jar	1	22	N/R NONE	Wall Mounted No Retrofit. To remain as is.	720	JC	0.022	0.022	15.73	15.73
420	METZGER HALL	1ST FLOOR	COMMUNITY RESTROOM 116	2	85	FL-2X4-F43ILL-PR	2'x4' Troffer Recessed Flanged Fluorescent, (3) 48", T-8 lamp, Instant Start Ballast, NLO (BF: .85-.95) Prismatic Acrylic Diffuser	2	30	CK2x4 LEDT8/4/15W/2	Recessed Flanged Install 2x4 2-Lamp Centering Kit LED 4' T8 Lamp (2) 15W Lamps	8760	EMERG	0.169	0.060	1481.32	525.60
421	METZGER HALL	1ST FLOOR	COMMUNITY RESTROOM 116	1	56	WM-VAN4-F42ILL-PR	4' Vanity Wall Mounted Fluorescent, (2) 48", T-8 lamp, Instant Start Ballast, NLO (BF: .85-.95) Prismatic Acrylic Diffuser	1	30	LEDT8 LEDT8/4/15W/2	Wall Mounted T8 LED Retrofit Lamp with External Driver LED 4' T8 Lamp (2) 15W Lamps	8760	EMERG	0.056	0.030	491.00	262.80
422	METZGER HALL	BASEMENT	HALLWAY	9	56	S-W4-F42ILL-W	4' Wraparound Surface Mounted Fluorescent, (2) 48", T-8 lamp, Instant Start Ballast, NLO (BF: .85-.95) Acrylic Wrap-Around Diffuser	9	30	LEDT8 LEDT8/4/15W/2	Surface Mounted T8 LED Retrofit Lamp with External Driver LED 4' T8 Lamp (2) 15W Lamps	2520	CORR	0.504	0.270	1271.21	680.40
423	METZGER HALL	BASEMENT	LAUNDRY ROOM	1	56	S-W4-F42ILL-W	4' Wraparound Surface Mounted Fluorescent, (2) 48", T-8 lamp, Instant Start Ballast, NLO (BF: .85-.95) Acrylic Wrap-Around Diffuser	1	30	LEDT8 LEDT8/4/15W/2	Surface Mounted T8 LED Retrofit Lamp with External Driver LED 4' T8 Lamp (2) 15W Lamps	1440	DORM	0.056	0.030	80.71	43.20
424	METZGER HALL	BASEMENT	RESTROOM	1	56	S-W4-F42ILL-W	4' Wraparound Surface Mounted Fluorescent, (2) 48", T-8 lamp, Instant Start Ballast, NLO (BF: .85-.95) Acrylic Wrap-Around Diffuser	1	30	LEDT8 LEDT8/4/15W/2	Surface Mounted T8 LED Retrofit Lamp with External Driver LED 4' T8 Lamp (2) 15W Lamps	1040	PRIV RESTROOM	0.056	0.030	58.29	31.20
425	METZGER HALL	BASEMENT	CUSTODIAL STORAGE ROOM	2	56	S-W4-F42ILL-W	4' Wraparound Surface Mounted Fluorescent, (2) 48", T-8 lamp, Instant Start Ballast, NLO (BF: .85-.95) Acrylic Wrap-Around Diffuser	2	30	LEDT8 LEDT8/4/15W/2	Surface Mounted T8 LED Retrofit Lamp with External Driver LED 4' T8 Lamp (2) 15W Lamps	720	JC	0.112	0.060	80.71	43.20
426	METZGER HALL	BASEMENT	DATA ROOM	2	56	S-W4-F42ILL-W	4' Wraparound Surface Mounted Fluorescent, (2) 48", T-8 lamp, Instant Start Ballast, NLO (BF: .85-.95) Acrylic Wrap-Around Diffuser	2	30	LEDT8 LEDT8/4/15W/2	Surface Mounted T8 LED Retrofit Lamp with External Driver LED 4' T8 Lamp (2) 15W Lamps	540	STORAGE	0.112	0.060	60.53	32.40
427	METZGER HALL	BASEMENT	DORM ROOM 001-004	4	56	S-W4-F42ILL-W	4' Wraparound Surface Mounted Fluorescent, (2) 48", T-8 lamp, Instant Start Ballast, NLO (BF: .85-.95) Acrylic Wrap-Around Diffuser	4	30	LEDT8 LEDT8/4/15W/2	Surface Mounted T8 LED Retrofit Lamp with External Driver LED 4' T8 Lamp (2) 15W Lamps	1440	DORM	0.224	0.120	322.85	172.80
428	METZGER HALL	BASEMENT	MECHANICAL ROOM	2	56	S-IND4-F42ILL-NL	4' Industrial Surface Mounted Fluorescent, (2) 48", T-8 lamp, Instant Start Ballast, NLO (BF: .85-.95) (No Diffuser)	2	30	LEDT8 LEDT8/4/15W/2	Surface Mounted T8 LED Retrofit Lamp with External Driver LED 4' T8 Lamp (2) 15W Lamps	540	STORAGE	0.112	0.060	60.53	32.40
429	METZGER HALL	BASEMENT	UTILITY ROOM (MECH)	3	56	S-IND4-F42ILL-NL	4' Industrial Surface Mounted Fluorescent, (2) 48", T-8 lamp, Instant Start Ballast, NLO (BF: .85-.95) (No Diffuser)	3	30	LEDT8 LEDT8/4/15W/2	Surface Mounted T8 LED Retrofit Lamp with External Driver LED 4' T8 Lamp (2) 15W Lamps	540	STORAGE	0.168	0.090	90.80	48.60
430	METZGER HALL	BASEMENT	STAIRWELL 1	5	56	S-W4-F42ILL-W	4' Wraparound Surface Mounted Fluorescent, (2) 48", T-8 lamp, Instant Start Ballast, NLO (BF: .85-.95) Acrylic Wrap-Around Diffuser	5	30	LEDT8 LEDT8/4/15W/2	Surface Mounted T8 LED Retrofit Lamp with External Driver LED 4' T8 Lamp (2) 15W Lamps	8760	EMERG	0.280	0.150	2454.99	1314.00
431	METZGER HALL	BASEMENT	STAIRWELL 2	5	56	S-W4-F42ILL-W	4' Wraparound Surface Mounted Fluorescent, (2) 48", T-8 lamp, Instant Start Ballast, NLO (BF: .85-.95) Acrylic Wrap-Around Diffuser	5	30	LEDT8 LEDT8/4/15W/2	Surface Mounted T8 LED Retrofit Lamp with External Driver LED 4' T8 Lamp (2) 15W Lamps	8760	EMERG	0.280	0.150	2454.99	1314.00
432	ARMSTRONG HALL	3RD FLOOR	HALLWAY	8	56	R-2X4-F42ILL-PR	2'x4' Troffer Recessed Fluorescent, (2) 48", T-8 lamp, Instant Start Ballast, NLO (BF: .85-.95) Prismatic Acrylic Diffuser	8	30	LEDT8 LEDT8/4/15W/2	Recessed T8 LED Retrofit Lamp with External Driver LED 4' T8 Lamp (2) 15W Lamps	2520	CORR	0.448	0.240	1129.97	604.80
433	ARMSTRONG HALL	3RD FLOOR	DORM ROOMS 301-318	18	106	R-2X4-F44ILL-PR	2'x4' Troffer Recessed Fluorescent, (4) 48", T-8 lamp, Instant Start Ballast, NLO (BF: .85-.95) Prismatic Acrylic Diffuser	18	30	CK2x4 LEDT8/4/15W/2	Recessed Install 2x4 2-Lamp Centering Kit LED 4' T8 Lamp (2) 15W Lamps	1440	DORM	1.915	0.540	2757.89	777.60
434	ARMSTRONG HALL	3RD FLOOR	STUDY ROOM	6	56	R-2X4-F42ILL-PR	2'x4' Troffer Recessed Fluorescent, (2) 48", T-8 lamp, Instant Start Ballast, NLO (BF: .85-.95) Prismatic Acrylic Diffuser	6	30	LEDT8 LEDT8/4/15W/2	Recessed T8 LED Retrofit Lamp with External Driver LED 4' T8 Lamp (2) 15W Lamps	2200	CLASS	0.336	0.180	739.86	396.00
435	ARMSTRONG HALL	3RD FLOOR	COMMUNITY RESTROOM	5	56	FL-1X4-F42ILL-PR	1'x4' Troffer Recessed Flanged Fluorescent, (2) 48", T-8 lamp, Instant Start Ballast, NLO (BF: .85-.95) Prismatic Acrylic Diffuser	5	30	LEDT8 LEDT8/4/15W/2	Recessed Flanged T8 LED Retrofit Lamp with External Driver LED 4' T8 Lamp (2) 15W Lamps	8760	EMERG	0.280	0.150	2454.99	1314.00
436	ARMSTRONG HALL	3RD FLOOR	COMMUNITY RESTROOM	2	56	R-S4-F42ILL-PR	4' Strip Recessed Fluorescent, (2) 48", T-8 lamp, Instant Start Ballast, NLO (BF: .85-.95) Prismatic Acrylic Diffuser	2	30	LEDT8 LEDT8/4/15W/2	Recessed T8 LED Retrofit Lamp with External Driver LED 4' T8 Lamp (2) 15W Lamps	8760	EMERG	0.112	0.060	982.00	525.60
437	ARMSTRONG HALL	3RD FLOOR	COMMUNITY RESTROOM	1	63	R-REC/8-CFQ26/2-GFRR	Recessed Can 8" Recessed Compact Fluorescent, quad, (2) 26W lamp Round Glass Fresnel Lens	1	63	N/R NONE	Recessed No Retrofit. To remain as is.	8760	EMERG	0.063	0.063	549.25	549.25
438	ARMSTRONG HALL	3RD FLOOR	COMMUNITY RESTROOM	1	22	R-REC/6-CFS23/1-GFRR	Recessed Can 6" Recessed Compact Fluorescent, spiral, (1) 23W lamp Round Glass Fresnel Lens	1	10	LEDS/BR30 LEDS10/1	Recessed Install LED Screw-in BR30 Lamp Light Emitting Diode Lamp, Screw-in, (1) 10W lamp	8760	EMERG	0.022	0.010	191.41	87.60
439	ARMSTRONG HALL	3RD FLOOR	CUSTODIAL CLOSET	1	29	S-DRUM-CFT13/2-DRUMW	Drum Surface Mounted Compact Fluorescent, twin, (2) 13W lamp White Plastic Drum	1	10	LED/DRUM/KIT/8" LED10/W	Surface Mounted Retrofit Existing Drum with 8" LED Kit LED Light Fixture. (1) 10W	720	JC	0.029	0.010	21.20	7.20
	ARMSTRONG HALL	3RD FLOOR	STORAGE CLOSET	1	29	S-DRUM-CFT13/2-DRUMW	Drum Surface Mounted Compact Fluorescent, twin, (2) 13W lamp White Plastic Drum	1	10	LED/DRUM/KIT/8" LED10/W	Surface Mounted Retrofit Existing Drum with 8" LED Kit LED Light Fixture. (1) 10W	540	STORAGE	0.029	0.010	15.90	5.40
441	ARMSTRONG HALL	2ND FLOOR	HALLWAY	8	56	R-2X4-F42ILL-PR	2'x4' Troffer Recessed Fluorescent, (2) 48", T-8 lamp, Instant Start Ballast, NLO (BF: .85-.95) Prismatic Acrylic Diffuser	8	30	LEDT8 LEDT8/4/15W/2	Recessed T8 LED Retrofit Lamp with External Driver LED 4' T8 Lamp (2) 15W Lamps	2520	CORR	0.448	0.240	1129.97	604.80
442	ARMSTRONG HALL	2ND FLOOR	DORM ROOMS 201-218	18	106	R-2X4-F44ILL-PR	2'x4' Troffer Recessed Fluorescent, (4) 48", T-8 lamp, Instant Start Ballast, NLO (BF: .85-.95) Prismatic Acrylic Diffuser	18	30	CK2x4 LEDT8/4/15W/2	Recessed Install 2x4 2-Lamp Centering Kit LED 4' T8 Lamp (2) 15W Lamps	1440	DORM	1.915	0.540	2757.89	777.60
443	ARMSTRONG HALL	2ND FLOOR	STUDY ROOM	6	56	R-2X4-F42ILL-PR	2'x4' Troffer Recessed Fluorescent, (2) 48", T-8 lamp, Instant Start Ballast, NLO (BF: .85-.95) Prismatic Acrylic Diffuser	6	30	LEDT8 LEDT8/4/15W/2	Recessed T8 LED Retrofit Lamp with External Driver LED 4' T8 Lamp (2) 15W Lamps	2200	CLASS	0.336	0.180	739.86	396.00
444	ARMSTRONG HALL	2ND FLOOR	COMMUNITY RESTROOM	5	56	FL-1X4-F42ILL-PR	1'x4' Troffer Recessed Flanged Fluorescent, (2) 48", T-8 lamp, Instant Start Ballast, NLO (BF: .85-.95) Prismatic Acrylic Diffuser	5	30	LEDT8 LEDT8/4/15W/2	Recessed Flanged T8 LED Retrofit Lamp with External Driver LED 4' T8 Lamp (2) 15W Lamps	8760	EMERG	0.280	0.150	2454.99	1314.00
445	ARMSTRONG HALL	2ND FLOOR	COMMUNITY RESTROOM	2	56	R-S4-F42ILL-PR	4' Strip Recessed Fluorescent, (2) 48", T-8 lamp, Instant Start Ballast, NLO (BF: .85-.95) Prismatic Acrylic Diffuser	2	30	LEDT8 LEDT8/4/15W/2	Recessed T8 LED Retrofit Lamp with External Driver LED 4' T8 Lamp (2) 15W Lamps	8760	EMERG	0.112	0.060	982.00	525.60
446	ARMSTRONG HALL	2ND FLOOR	COMMUNITY RESTROOM	1	63	R-REC/8-CFQ26/2-GFRR	Recessed Can 8" Recessed Compact Fluorescent, quad, (2) 26W lamp Round Glass Fresnel Lens	1	63	N/R NONE	Recessed No Retrofit. To remain as is.	8760	EMERG	0.063	0.063	549.25	549.25
447	ARMSTRONG HALL	2ND FLOOR	COMMUNITY RESTROOM	1	22	R-REC/6-CFS23/1-GFRR	Recessed Can 6" Recessed Compact Fluorescent, spiral, (1) 23W lamp Round Glass Fresnel Lens	1	10	LEDS/BR30 LEDS10/1	Recessed Install LED Screw-in BR30 Lamp Light Emitting Diode Lamp, Screw-in, (1) 10W lamp	8760	EMERG	0.022	0.010	191.41	87.60
448	ARMSTRONG HALL	2ND FLOOR	CUSTODIAL CLOSET	1	29	S-DRUM-CFT13/2-DRUMW	Drum Surface Mounted Compact Fluorescent, twin, (2) 13W lamp White Plastic Drum	1	10	LED/DRUM/KIT/8" LED10/W	Surface Mounted Retrofit Existing Drum with 8" LED Kit LED Light Fixture. (1) 10W	720	JC	0.029	0.010	21.20	7.20
449	ARMSTRONG HALL	2ND FLOOR	STORAGE CLOSET	1	29	S-DRUM-CFT13/2-DRUMW	Drum Surface Mounted Compact Fluorescent, twin, (2) 13W lamp White Plastic Drum	1	10	LED/DRUM/KIT/8" LED10/W	Surface Mounted Retrofit Existing Drum with 8" LED Kit LED Light Fixture. (1) 10W	540	STORAGE	0.029	0.010	15.90	5.40
450	ARMSTRONG HALL	1ST FLOOR	HALLWAY	8	56	R-2X4-F42ILL-PR	2'x4' Troffer Recessed Fluorescent, (2) 48", T-8 lamp, Instant Start Ballast, NLO (BF: .85-.95) Prismatic Acrylic Diffuser	8	30	LEDT8 LEDT8/4/15W/2	Recessed T8 LED Retrofit Lamp with External Driver LED 4' T8 Lamp (2) 15W Lamps	2520	CORR	0.448	0.240	1129.97	604.80
451	ARMSTRONG HALL	1ST FLOOR	DORM ROOMS 101-114	14	106	R-2X4-F44ILL-PR	2'x4' Troffer Recessed Fluorescent, (4) 48", T-8 lamp, Instant Start Ballast, NLO (BF: .85-.95) Prismatic Acrylic Diffuser	14	30	CK2x4 LEDT8/4/15W/2	Recessed Install 2x4 2-Lamp Centering Kit LED 4' T8 Lamp (2) 15W Lamps	1440	DORM	1.490	0.420	2145.02	604.80
452	ARMSTRONG HALL	1ST FLOOR	ENTRANCE LOBBY	6	56	R-2X4-F42ILL-PR	2'x4' Troffer Recessed Fluorescent, (2) 48", T-8 lamp, Instant Start Ballast, NLO (BF: .85-.95) Prismatic Acrylic Diffuser	6	30	LEDT8 LEDT8/4/15W/2	Recessed T8 LED Retrofit Lamp with External Driver LED 4' T8 Lamp (2) 15W Lamps	2520	CORR	0.336	0.180	847.48	453.60
453	ARMSTRONG HALL	1ST FLOOR	COMMUNITY RESTROOM	5	56	FL-1X4-F42ILL-PR	1'x4' Troffer Recessed Flanged Fluorescent, (2) 48", T-8 lamp, Instant Start Ballast, NLO (BF: .85-.95) Prismatic Acrylic Diffuser	5	30	LEDT8 LEDT8/4/15W/2	Recessed Flanged T8 LED Retrofit Lamp with External Driver LED 4' T8 Lamp (2) 15W Lamps	8760	EMERG	0.280	0.150	2454.99	1314.00
454	ARMSTRONG HALL	1ST FLOOR	COMMUNITY RESTROOM	2	56	R-S4-F42ILL-PR	4' Strip Recessed Fluorescent, (2) 48", T-8 lamp, Instant Start Ballast, NLO (BF: .85-.95) Prismatic Acrylic Diffuser	2	30	LEDT8 LEDT8/4/15W/2	Recessed T8 LED Retrofit Lamp with External Driver LED 4' T8 Lamp (2) 15W Lamps	8760	EMERG	0.112	0.060	982.00	525.60
455	ARMSTRONG HALL	1ST FLOOR	COMMUNITY RESTROOM	1	63	R-REC/8-CFQ26/2-GFRR	Recessed Can 8" Recessed Compact Fluorescent, quad, (2) 26W lamp Round Glass Fresnel Lens	1	63	N/R NONE	Recessed No Retrofit. To remain as is.	8760	EMERG	0.063	0.063	549.25	549.25
456	ARMSTRONG HALL	1ST FLOOR	COMMUNITY RESTROOM	1	22	R-REC/6-CFS23/1-GFRR	Recessed Can 6" Recessed Compact Fluorescent, spiral, (1) 23W lamp Round Glass Fresnel Lens	1	10	LEDS/BR30 LEDS10/1	Recessed Install LED Screw-in BR30 Lamp Light Emitting Diode Lamp, Screw-in, (1) 10W lamp	8760	EMERG	0.022	0.010	191.41	87.60
457	ARMSTRONG HALL	1ST FLOOR	CUSTODIAL CLOSET	1	29	S-DRUM-CFT13/2-DRUMW	Drum Surface Mounted Compact Fluorescent, twin, (2) 13W lamp White Plastic Drum	1	10	LED/DRUM/KIT/8" LED10/W	Surface Mounted Retrofit Existing Drum with 8" LED Kit LED Light Fixture. (1) 10W	720	JC	0.029	0.010	21.20	7.20
458	ARMSTRONG HALL	1ST FLOOR	STORAGE CLOSET	1	29	S-DRUM-CFT13/2-DRUMW	Drum Surface Mounted Compact Fluorescent, twin, (2) 13W lamp White Plastic Drum	1	10	LED/DRUM/KIT/8" LED10/W	Surface Mounted Retrofit Existing Drum with 8" LED Kit LED Light Fixture. (1) 10W	540	STORAGE	0.029	0.010	15.90	5.40
459	ARMSTRONG HALL	1ST FLOOR	LOBBY RESTROOM	1	31	R-2X2-F22ILL-PR	2'x2' Troffer Recessed Fluorescent, (2) 24", T-8 lamp, Instant Start Ballast, NLO (BF: .85-.95) Prismatic Acrylic Diffuser	1	20	LEDT8 LEDT8/2/10W/2	Recessed T8 LED Retrofit Lamp with External Driver LED 2' T8 Lamp (2) 10W Lamps	1040	PRIV RESTROOM	0.031	0.020	32.60	20.80
460	ARMSTRONG HALL	1ST FLOOR	RA APARTMENT	4	106	R-2X4-F44ILL-PR	2'x4' Troffer Recessed Fluorescent, (4) 48", T-8 lamp, Instant Start Ballast, NLO (BF: .85-.95) Prismatic Acrylic Diffuser	4	30	CK2x4 LEDT8/4/15W/2	Recessed Install 2x4 2-Lamp Centering Kit LED 4' T8 Lamp (2) 15W Lamps	1440	DORM	0.428	0.120	612.86	172.80
461	ARMSTRONG HALL	BASEMENT	CONFERENCE ROOM	4	56	R-2X4-F42ILL-PR	2'x4' Troffer Recessed Fluorescent, (2) 48", T-8 lamp, Instant Start Ballast, NLO (BF: .85-.95) Prismatic Acrylic Diffuser	4	30	LEDT8 LEDT8/4/15W/2	Recessed T8 LED Retrofit Lamp with External Driver LED 4' T8 Lamp (2) 15W Lamps	2080	OFFICE	0.224	0.120	466.34	249.60
462	ARMSTRONG HALL	BASEMENT	RECREATION ROOM	14	85	R-2X4-F43ILL-PR	2'x4' Troffer Recessed Fluorescent, (3) 48", T-8 lamp, Instant Start Ballast, NLO (BF: .85-.95) Prismatic Acrylic Diffuser	14	30	CK2x4 LEDT8/4/15W/2	Recessed Install 2x4 2-Lamp Centering Kit LED 4' T8 Lamp (2) 15W Lamps	2200	CLASS	1.184	0.420	2604.14	924.00
463	ARMSTRONG HALL	BASEMENT	RECREATION ROOM	7	31	R-REC/6-CFQ26/1-NL	Recessed Can 6" Recessed Compact Fluorescent, quad, (1) 26W lamp (No Diffuser)	7	31	N/R NONE	Recessed No Retrofit. To remain as is.	2200	CLASS	0.219	0.219	482.79	482.79
	ARMSTRONG HALL	BASEMENT	MECHANICAL ROOM	4	56	S-W4-F42ILL-W	4' Wraparound Surface Mounted Fluorescent, (2) 48", T-8 lamp, Instant Start Ballast, NLO (BF: .85-.95) Acrylic Wrap-Around Diffuser	4	30	LEDT8 LEDT8/4/15W/2	Surface Mounted T8 LED Retrofit Lamp with External Driver LED 4' T8 Lamp (2) 15W Lamps	540	STORAGE	0.224	0.120	121.07	64.80
465	ARMSTRONG HALL	BASEMENT	MECHANICAL ROOM	5	22	PE-HH-CFS23/1-NL	High-Hat Pendant Mounted Compact Fluorescent, spiral, (1) 23W lamp (No Diffuser)	5	22	N/R NONE	Pendant Mounted No Retrofit. To remain as is.	540	STORAGE	0.109	0.109	59.00	59.00
466	ARMSTRONG HALL	BASEMENT	ELECTRICAL ROOM	2	56	S-W4-F42ILL-W	4' Wraparound Surface Mounted Fluorescent, (2) 48", T-8 lamp, Instant Start Ballast, NLO (BF: .85-.95) Acrylic Wrap-Around Diffuser	2	30	LEDT8 LEDT8/4/15W/2	Surface Mounted T8 LED Retrofit Lamp with External Driver LED 4' T8 Lamp (2) 15W Lamps	540	STORAGE	0.112	0.060	60.53	32.40

Line #	Facility	Area	Space	Pre Fixture Qty	Pre Wattage	Pre Code	Pre Description	Post Fixture Qty	Post Wattage	Post Code	Post Description	Hours Pre	Hours Code	Base kW	Retro Proposed kW	Base kWh	Retro Proposed kWh
467	ARMSTRONG HALL	BASEMENT	LAUNDRY ROOM	6	56	S-W4-F42ILL-W	4' Wraparound Surface Mounted Fluorescent, (2) 48", T-8 lamp, Instant Start Ballast, NLO (BF: .85-.95) Acrylic Wrap-Around Diffuser	6	30	LEDT8 LEDT8/4/15W/2	Surface Mounted T8 LED Retrofit Lamp with External Driver LED 4' T8 Lamp (2) 15W Lamps	1440	DORM	0.336	0.180	484.27	259.20
468	ARMSTRONG HALL	BASEMENT	HALLWAY	2	106	R-2X4-F44ILL-PR	2'x4' Troffer Recessed Fluorescent, (4) 48", T-8 lamp, Instant Start Ballast, NLO (BF: .85-.95) Prismatic Acrylic Diffuser	2	30	CK2x4 LEDT8/4/15W/2	Recessed Install 2x4 2-Lamp Centering Kit LED 4' T8 Lamp (2) 15W Lamps	2520	CORR	0.213	0.060	536.26	151.20
469	ARMSTRONG HALL	BASEMENT	STORAGE ROOM	4	56	S-IND4-F42ILL-NL	4' Industrial Surface Mounted Fluorescent, (2) 48", T-8 lamp, Instant Start Ballast, NLO (BF: .85-.95) (No Diffuser)	4	30	LEDT8 LEDT8/4/15W/2	Surface Mounted T8 LED Retrofit Lamp with External Driver LED 4' T8 Lamp (2) 15W Lamps	540	STORAGE	0.224	0.120	121.07	64.[illegible]
470	ARMSTRONG HALL	BASEMENT	STORAGE ROOM	3	56	S-IND4-F42ILL-NL	4' Industrial Surface Mounted Fluorescent, (2) 48", T-8 lamp, Instant Start Ballast, NLO (BF: .85-.95) (No Diffuser)	3	30	LEDT8 LEDT8/4/15W/2	Surface Mounted T8 LED Retrofit Lamp with External Driver LED 4' T8 Lamp (2) 15W Lamps	540	STORAGE	0.168	0.090	90.80	48.60
471	ARMSTRONG HALL	BASEMENT	STAIRWELL 1	6	56	WM-VAN4-F42ILL-PR	4' Vanity Wall Mounted Fluorescent, (2) 48", T-8 lamp, Instant Start Ballast, NLO (BF: .85-.95) Prismatic Acrylic Diffuser	6	30	LEDT8 LEDT8/4/15W/2	Wall Mounted T8 LED Retrofit Lamp with External Driver LED 4' T8 Lamp (2) 15W Lamps	8760	EMERG	0.336	0.180	2945.89	1576.80
472	ARMSTRONG HALL	BASEMENT	STAIRWELL 1	2	56	FL-2X4-F42ILL-PR	2'x4' Troffer Recessed Flanged Fluorescent, (2) 48", T-8 lamp, Instant Start Ballast, NLO (BF: .85-.95) Prismatic Acrylic Diffuser	2	30	LEDT8 LEDT8/4/15W/2	Recessed Flanged T8 LED Retrofit Lamp with External Driver LED 4' T8 Lamp (2) 15W Lamps	8760	EMERG	0.112	0.060	982.00	525.60
473	ARMSTRONG HALL	BASEMENT	STAIRWELL 2	6	56	WM-VAN4-F42ILL-PR	4' Vanity Wall Mounted Fluorescent, (2) 48", T-8 lamp, Instant Start Ballast, NLO (BF: .85-.95) Prismatic Acrylic Diffuser	6	30	LEDT8 LEDT8/4/15W/2	Wall Mounted T8 LED Retrofit Lamp with External Driver LED 4' T8 Lamp (2) 15W Lamps	8760	EMERG	0.336	0.180	2945.89	1576.80
474	ARMSTRONG HALL	BASEMENT	STAIRWELL 2	2	56	FL-2X4-F42ILL-PR	2'x4' Troffer Recessed Flanged Fluorescent, (2) 48", T-8 lamp, Instant Start Ballast, NLO (BF: .85-.95) Prismatic Acrylic Diffuser	2	30	LEDT8 LEDT8/4/15W/2	Recessed Flanged T8 LED Retrofit Lamp with External Driver LED 4' T8 Lamp (2) 15W Lamps	8760	EMERG	0.112	0.060	982.00	525.60
475	HERRINGTON HALL	3RD FLOOR	HALLWAY	8	56	R-2X4-F42ILL-PR	2'x4' Troffer Recessed Fluorescent, (2) 48", T-8 lamp, Instant Start Ballast, NLO (BF: .85-.95) Prismatic Acrylic Diffuser	8	30	LEDT8 LEDT8/4/15W/2	Recessed T8 LED Retrofit Lamp with External Driver LED 4' T8 Lamp (2) 15W Lamps	2520	CORR	0.448	0.240	1129.97	604.80
476	HERRINGTON HALL	3RD FLOOR	DORM ROOMS 301-318	18	106	R-2X4-F44ILL-PR	2'x4' Troffer Recessed Fluorescent, (4) 48", T-8 lamp, Instant Start Ballast, NLO (BF: .85-.95) Prismatic Acrylic Diffuser	18	30	CK2x4 LEDT8/4/15W/2	Recessed Install 2x4 2-Lamp Centering Kit LED 4' T8 Lamp (2) 15W Lamps	1440	DORM	1.915	0.540	2757.89	777.60
477	HERRINGTON HALL	3RD FLOOR	STUDY ROOM	6	56	R-2X4-F42ILL-PR	2'x4' Troffer Recessed Fluorescent, (2) 48", T-8 lamp, Instant Start Ballast, NLO (BF: .85-.95) Prismatic Acrylic Diffuser	6	30	LEDT8 LEDT8/4/15W/2	Recessed T8 LED Retrofit Lamp with External Driver LED 4' T8 Lamp (2) 15W Lamps	2200	CLASS	0.336	0.180	739.86	396.00
478	HERRINGTON HALL	3RD FLOOR	COMMUNITY RESTROOM	5	56	FL-1X4-F42ILL-PR	1'x4' Troffer Recessed Flanged Fluorescent, (2) 48", T-8 lamp, Instant Start Ballast, NLO (BF: .85-.95) Prismatic Acrylic Diffuser	5	30	LEDT8 LEDT8/4/15W/2	Recessed Flanged T8 LED Retrofit Lamp with External Driver LED 4' T8 Lamp (2) 15W Lamps	8760	EMERG	0.280	0.150	2454.99	1314.00
479	HERRINGTON HALL	3RD FLOOR	COMMUNITY RESTROOM	2	56	R-S4-F42ILL-PR	4' Strip Recessed Fluorescent, (2) 48", T-8 lamp, Instant Start Ballast, NLO (BF: .85-.95) Prismatic Acrylic Diffuser	2	30	LEDT8 LEDT8/4/15W/2	Recessed T8 LED Retrofit Lamp with External Driver LED 4' T8 Lamp (2) 15W Lamps	8760	EMERG	0.112	0.060	982.00	525.60
480	HERRINGTON HALL	3RD FLOOR	COMMUNITY RESTROOM	1	63	R-REC/8-CFQ26/2-GFRR	Recessed Can 8" Recessed Compact Fluorescent, quad, (2) 26W lamp Round Glass Fresnel Lens	1	63	N/R NONE	Recessed No Retrofit. To remain as is	8760	EMERG	0.063	0.063	549.25	549.25
481	HERRINGTON HALL	3RD FLOOR	COMMUNITY RESTROOM	1	22	R-REC/6-CFS23/1-GFRR	Recessed Can 6" Recessed Compact Fluorescent, spiral, (1) 23W lamp Round Glass Fresnel Lens	1	10	LEDSI/BR30 LEDS10/1	Recessed Install LED Screw-in BR30 Lamp Light Emitting Diode Lamp, Screw-in, (1) 10W lamp	8760	EMERG	0.022	0.010	191.41	87.60
482	HERRINGTON HALL	3RD FLOOR	CUSTODIAL CLOSET	1	29	S-DRUM-CFT13/2-DRUMW	Drum Surface Mounted Compact Fluorescent, twin, (2) 13W lamp White Plastic Drum	1	10	LED/DRUM/KIT/8" LED10W	Surface Mounted Retrofit Existing Drum with 8" LED Kit LED Light Fixture. (1) 10W	720	JC	0.029	0.010	21.20	7.20
483	HERRINGTON HALL	3RD FLOOR	STORAGE CLOSET	1	29	S-DRUM-CFT13/2-DRUMW	Drum Surface Mounted Compact Fluorescent, twin, (2) 13W lamp White Plastic Drum	1	10	LED/DRUM/KIT/8" LED10W	Surface Mounted Retrofit Existing Drum with 8" LED Kit LED Light Fixture. (1) 10W	540	STORAGE	0.029	0.010	15.90	5.40
484	HERRINGTON HALL	2ND FLOOR	HALLWAY	8	56	R-2X4-F42ILL-PR	2'x4' Troffer Recessed Fluorescent, (2) 48", T-8 lamp, Instant Start Ballast, NLO (BF: .85-.95) Prismatic Acrylic Diffuser	8	30	LEDT8 LEDT8/4/15W/2	Recessed T8 LED Retrofit Lamp with External Driver LED 4' T8 Lamp (2) 15W Lamps	2520	CORR	0.448	0.240	1129.97	604.80
485	HERRINGTON HALL	2ND FLOOR	DORM ROOMS 201-218	18	106	R-2X4-F44ILL-PR	2'x4' Troffer Recessed Fluorescent, (4) 48", T-8 lamp, Instant Start Ballast, NLO (BF: .85-.95) Prismatic Acrylic Diffuser	18	30	CK2x4 LEDT8/4/15W/2	Recessed Install 2x4 2-Lamp Centering Kit LED 4' T8 Lamp (2) 15W Lamps	1440	DORM	1.915	0.540	2757.89	777.60
486	HERRINGTON HALL	2ND FLOOR	STUDY ROOM	6	56	R-2X4-F42ILL-PR	2'x4' Troffer Recessed Fluorescent, (2) 48", T-8 lamp, Instant Start Ballast, NLO (BF: .85-.95) Prismatic Acrylic Diffuser	6	30	LEDT8 LEDT8/4/15W/2	Recessed T8 LED Retrofit Lamp with External Driver LED 4' T8 Lamp (2) 15W Lamps	2200	CLASS	0.336	0.180	739.86	396.00
487	HERRINGTON HALL	2ND FLOOR	COMMUNITY RESTROOM	5	56	FL-1X4-F42ILL-PR	1'x4' Troffer Recessed Flanged Fluorescent, (2) 48", T-8 lamp, Instant Start Ballast, NLO (BF: .85-.95) Prismatic Acrylic Diffuser	5	30	LEDT8 LEDT8/4/15W/2	Recessed Flanged T8 LED Retrofit Lamp with External Driver LED 4' T8 Lamp (2) 15W Lamps	8760	EMERG	0.280	0.150	2454.99	1314.00
488	HERRINGTON HALL	2ND FLOOR	COMMUNITY RESTROOM	2	56	R-S4-F42ILL-PR	4' Strip Recessed Fluorescent, (2) 48", T-8 lamp, Instant Start Ballast, NLO (BF: .85-.95) Prismatic Acrylic Diffuser	2	30	LEDT8 LEDT8/4/15W/2	Recessed T8 LED Retrofit Lamp with External Driver LED 4' T8 Lamp (2) 15W Lamps	8760	EMERG	0.112	0.060	982.00	525.60
489	HERRINGTON HALL	2ND FLOOR	COMMUNITY RESTROOM	1	63	R-REC/8-CFQ26/2-GFRR	Recessed Can 8" Recessed Compact Fluorescent, quad, (2) 26W lamp Round Glass Fresnel Lens	1	63	N/R NONE	Recessed No Retrofit. To remain as is.	8760	EMERG	0.063	0.063	549.25	549.25
490	HERRINGTON HALL	2ND FLOOR	COMMUNITY RESTROOM	1	22	R-REC/6-CFS23/1-GFRR	Recessed Can 6" Recessed Compact Fluorescent, spiral, (1) 23W lamp Round Glass Fresnel Lens	1	10	LEDSI/BR30 LEDS10/1	Recessed Install LED Screw-in BR30 Lamp Light Emitting Diode Lamp, Screw-in, (1) 10W lamp	8760	EMERG	0.022	0.010	191.41	87.60
491	HERRINGTON HALL	2ND FLOOR	CUSTODIAL CLOSET	1	29	S-DRUM-CFT13/2-DRUMW	Drum Surface Mounted Compact Fluorescent, twin, (2) 13W lamp White Plastic Drum	1	10	LED/DRUM/KIT/8" LED10W	Surface Mounted Retrofit Existing Drum with 8" LED Kit LED Light Fixture. (1) 10W	720	JC	0.029	0.010	21.20	7.20
492	HERRINGTON HALL	2ND FLOOR	STORAGE CLOSET	1	29	S-DRUM-CFT13/2-DRUMW	Drum Surface Mounted Compact Fluorescent, twin, (2) 13W lamp White Plastic Drum	1	10	LED/DRUM/KIT/8" LED10W	Surface Mounted Retrofit Existing Drum with 8" LED Kit LED Light Fixture. (1) 10W	540	STORAGE	0.029	0.010	15.90	5.4[illegible]
493	HERRINGTON HALL	1ST FLOOR	HALLWAY	8	56	R-2X4-F42ILL-PR	2'x4' Troffer Recessed Fluorescent, (2) 48", T-8 lamp, Instant Start Ballast, NLO (BF: .85-.95) Prismatic Acrylic Diffuser	8	30	LEDT8 LEDT8/4/15W/2	Recessed T8 LED Retrofit Lamp with External Driver LED 4' T8 Lamp (2) 15W Lamps	2520	CORR	0.448	0.240	1129.97	604.8[illegible]
494	HERRINGTON HALL	1ST FLOOR	DORM ROOMS 101-114	14	106	R-2X4-F44ILL-PR	2'x4' Troffer Recessed Fluorescent, (4) 48", T-8 lamp, Instant Start Ballast, NLO (BF: .85-.95) Prismatic Acrylic Diffuser	14	30	CK2x4 LEDT8/4/15W/2	Recessed Install 2x4 2-Lamp Centering Kit LED 4' T8 Lamp (2) 15W Lamps	1440	DORM	1.490	0.420	2145.02	604.80
495	HERRINGTON HALL	1ST FLOOR	ENTRANCE LOBBY	6	56	R-2X4-F42ILL-PR	2'x4' Troffer Recessed Fluorescent, (2) 48", T-8 lamp, Instant Start Ballast, NLO (BF: .85-.95) Prismatic Acrylic Diffuser	6	30	LEDT8 LEDT8/4/15W/2	Recessed T8 LED Retrofit Lamp with External Driver LED 4' T8 Lamp (2) 15W Lamps	2520	CORR	0.336	0.180	847.48	453.60
496	HERRINGTON HALL	1ST FLOOR	COMMUNITY RESTROOM	5	56	FL-1X4-F42ILL-PR	1'x4' Troffer Recessed Flanged Fluorescent, (2) 48", T-8 lamp, Instant Start Ballast, NLO (BF: .85-.95) Prismatic Acrylic Diffuser	5	30	LEDT8 LEDT8/4/15W/2	Recessed Flanged T8 LED Retrofit Lamp with External Driver LED 4' T8 Lamp (2) 15W Lamps	8760	EMERG	0.280	0.150	2454.99	1314.00
497	HERRINGTON HALL	1ST FLOOR	COMMUNITY RESTROOM	2	56	R-S4-F42ILL-PR	4' Strip Recessed Fluorescent, (2) 48", T-8 lamp, Instant Start Ballast, NLO (BF: .85-.95) Prismatic Acrylic Diffuser	2	30	LEDT8 LEDT8/4/15W/2	Recessed T8 LED Retrofit Lamp with External Driver LED 4' T8 Lamp (2) 15W Lamps	8760	EMERG	0.112	0.060	982.00	525.60
498	HERRINGTON HALL	1ST FLOOR	COMMUNITY RESTROOM	1	63	R-REC/8-CFQ26/2-GFRR	Recessed Can 8" Recessed Compact Fluorescent, quad, (2) 26W lamp Round Glass Fresnel Lens	1	63	N/R NONE	Recessed No Retrofit. To remain as is.	8760	EMERG	0.063	0.063	549.25	549.25
499	HERRINGTON HALL	1ST FLOOR	COMMUNITY RESTROOM	1	22	R-REC/6-CFS23/1-GFRR	Recessed Can 6" Recessed Compact Fluorescent, spiral, (1) 23W lamp Round Glass Fresnel Lens	1	10	LEDSI/BR30 LEDS10/1	Recessed Install LED Screw-in BR30 Lamp Light Emitting Diode Lamp, Screw-in, (1) 10W lamp	8760	EMERG	0.022	0.010	191.41	87.60
500	HERRINGTON HALL	1ST FLOOR	CUSTODIAL CLOSET	1	29	S-DRUM-CFT13/2-DRUMW	Drum Surface Mounted Compact Fluorescent, twin, (2) 13W lamp White Plastic Drum	1	10	LED/DRUM/KIT/8" LED10W	Surface Mounted Retrofit Existing Drum with 8" LED Kit LED Light Fixture. (1) 10W	720	JC	0.029	0.010	21.20	7.20
501	HERRINGTON HALL	1ST FLOOR	STORAGE CLOSET	1	29	S-DRUM-CFT13/2-DRUMW	Drum Surface Mounted Compact Fluorescent, twin, (2) 13W lamp White Plastic Drum	1	10	LED/DRUM/KIT/8" LED10W	Surface Mounted Retrofit Existing Drum with 8" LED Kit LED Light Fixture. (1) 10W	540	STORAGE	0.029	0.010	15.90	5.40
502	HERRINGTON HALL	1ST FLOOR	LOBBY RESTROOM	1	31	R-2X2-F22ILL-PR	2'x2' Troffer Recessed Fluorescent, (2) 24", T-8 lamp, Instant Start Ballast, NLO (BF: .85-.95) Prismatic Acrylic Diffuser	1	20	LEDT8 LEDT8/2/10W/2	Recessed T8 LED Retrofit Lamp with External Driver LED 2' T8 Lamp (2) 10W Lamps	1040	PRIV RESTROOM	0.031	0.020	32.60	20.80
503	HERRINGTON HALL	1ST FLOOR	RA APARTMENT	4	106	R-2X4-F44ILL-PR	2'x4' Troffer Recessed Fluorescent, (4) 48", T-8 lamp, Instant Start Ballast, NLO (BF: .85-.95) Prismatic Acrylic Diffuser	4	30	CK2x4 LEDT8/4/15W/2	Recessed Install 2x4 2-Lamp Centering Kit LED 4' T8 Lamp (2) 15W Lamps	1440	DORM	0.426	0.120	612.86	172.80
504	HERRINGTON HALL	BASEMENT	CONFERENCE ROOM	4	56	R-2X4-F42ILL-PR	2'x4' Troffer Recessed Fluorescent, (2) 48", T-8 lamp, Instant Start Ballast, NLO (BF: .85-.95) Prismatic Acrylic Diffuser	4	30	LEDT8 LEDT8/4/15W/2	Recessed T8 LED Retrofit Lamp with External Driver LED 4' T8 Lamp (2) 15W Lamps	2080	OFFICE	0.224	0.120	466.34	249.60
505	HERRINGTON HALL	BASEMENT	RECREATION ROOM	14	65	R-2X4-F43ILL-PR	2'x4' Troffer Recessed Fluorescent, (3) 48", T-8 lamp, Instant Start Ballast, NLO (BF: .85-.95) Prismatic Acrylic Diffuser	14	30	CK2x4 LEDT8/4/15W/2	Recessed Install 2x4 2-Lamp Centering Kit LED 4' T8 Lamp (2) 15W Lamps	2200	CLASS	1.184	0.420	2604.14	924.00
506	HERRINGTON HALL	BASEMENT	RECREATION ROOM	7	31	R-REC/8-CFQ26/1-NL	Recessed Can 8" Recessed Compact Fluorescent, quad, (1) 26W lamp (No Diffuser)	7	31	N/R NONE	Recessed No Retrofit. To remain as is.	2200	CLASS	0.219	0.219	482.79	482.79
507	HERRINGTON HALL	BASEMENT	MECHANICAL ROOM	4	56	S-W4-F42ILL-W	4' Wraparound Surface Mounted Fluorescent, (2) 48", T-8 lamp, Instant Start Ballast, NLO (BF: .85-.95) Acrylic Wrap-Around Diffuser	4	30	LEDT8 LEDT8/4/15W/2	Surface Mounted T8 LED Retrofit Lamp with External Driver LED 4' T8 Lamp (2) 15W Lamps	540	STORAGE	0.224	0.120	121.07	64.80
508	HERRINGTON HALL	BASEMENT	MECHANICAL ROOM	5	22	PE-HH-CFS23/1-NL	High-Hat Pendant Mounted Compact Fluorescent, spiral, (1) 23W lamp (No Diffuser)	5	22	N/R NONE	Pendant Mounted No Retrofit. To remain as is.	540	STORAGE	0.109	0.109	59.00	59.00
509	HERRINGTON HALL	BASEMENT	ELECTRICAL ROOM	2	56	S-W4-F42ILL-W	4' Wraparound Surface Mounted Fluorescent, (2) 48", T-8 lamp, Instant Start Ballast, NLO (BF: .85-.95) Acrylic Wrap-Around Diffuser	2	30	LEDT8 LEDT8/4/15W/2	Surface Mounted T8 LED Retrofit Lamp with External Driver LED 4' T8 Lamp (2) 15W Lamps	540	STORAGE	0.112	0.060	60.53	32.40
510	HERRINGTON HALL	BASEMENT	LAUNDRY ROOM	6	56	S-W4-F42ILL-W	4' Wraparound Surface Mounted Fluorescent, (2) 48", T-8 lamp, Instant Start Ballast, NLO (BF: .85-.95) Acrylic Wrap-Around Diffuser	6	30	LEDT8 LEDT8/4/15W/2	Surface Mounted T8 LED Retrofit Lamp with External Driver LED 4' T8 Lamp (2) 15W Lamps	1440	DORM	0.336	0.180	484.27	259.20
511	HERRINGTON HALL	BASEMENT	HALLWAY	2	106	R-2X4-F44ILL-PR	2'x4' Troffer Recessed Fluorescent, (4) 48", T-8 lamp, Instant Start Ballast, NLO (BF: .85-.95) Prismatic Acrylic Diffuser	2	30	CK2x4 LEDT8/4/15W/2	Recessed Install 2x4 2-Lamp Centering Kit LED 4' T8 Lamp (2) 15W Lamps	2520	CORR	0.213	0.060	536.26	151.20
512	HERRINGTON HALL	BASEMENT	STORAGE ROOM	4	56	S-IND4-F42ILL-NL	4' Industrial Surface Mounted Fluorescent, (2) 48", T-8 lamp, Instant Start Ballast, NLO (BF: .85-.95) (No Diffuser)	4	30	LEDT8 LEDT8/4/15W/2	Surface Mounted T8 LED Retrofit Lamp with External Driver LED 4' T8 Lamp (2) 15W Lamps	540	STORAGE	0.224	0.120	121.07	64.80
513	HERRINGTON HALL	BASEMENT	STORAGE ROOM	3	56	S-IND4-F42ILL-NL	4' Industrial Surface Mounted Fluorescent, (2) 48", T-8 lamp, Instant Start Ballast, NLO (BF: .85-.95) (No Diffuser)	3	30	LEDT8 LEDT8/4/15W/2	Surface Mounted T8 LED Retrofit Lamp with External Driver LED 4' T8 Lamp (2) 15W Lamps	540	STORAGE	0.168	0.090	90.80	48.60
514	HERRINGTON HALL	BASEMENT	STAIRWELL 1	6	56	WM-VAN4-F42ILL-PR	4' Vanity Wall Mounted Fluorescent, (2) 48", T-8 lamp, Instant Start Ballast, NLO (BF: .85-.95) Prismatic Acrylic Diffuser	6	30	LEDT8 LEDT8/4/15W/2	Wall Mounted T8 LED Retrofit Lamp with External Driver LED 4' T8 Lamp (2) 15W Lamps	8760	EMERG	0.336	0.180	2945.89	1576.80
515	HERRINGTON HALL	BASEMENT	STAIRWELL 1	2	56	FL-2X4-F42ILL-PR	2'x4' Troffer Recessed Flanged Fluorescent, (2) 48", T-8 lamp, Instant Start Ballast, NLO (BF: .85-.95) Prismatic Acrylic Diffuser	2	30	LEDT8 LEDT8/4/15W/2	Recessed Flanged T8 LED Retrofit Lamp with External Driver LED 4' T8 Lamp (2) 15W Lamps	8760	EMERG	0.112	0.060	982.00	525.60
516	HERRINGTON HALL	BASEMENT	STAIRWELL 2	6	56	WM-VAN4-F42ILL-PR	4' Vanity Wall Mounted Fluorescent, (2) 48", T-8 lamp, Instant Start Ballast, NLO (BF: .85-.95) Prismatic Acrylic Diffuser	6	30	LEDT8 LEDT8/4/15W/2	Wall Mounted T8 LED Retrofit Lamp with External Driver LED 4' T8 Lamp (2) 15W Lamps	8760	EMERG	0.336	0.180	2945.89	1576[illegible]
517	HERRINGTON HALL	BASEMENT	STAIRWELL 2	2	56	FL-2X4-F42ILL-PR	2'x4' Troffer Recessed Flanged Fluorescent, (2) 48", T-8 lamp, Instant Start Ballast, NLO (BF: .85-.95) Prismatic Acrylic Diffuser	2	30	LEDT8 LEDT8/4/15W/2	Recessed Flanged T8 LED Retrofit Lamp with External Driver LED 4' T8 Lamp (2) 15W Lamps	8760	EMERG	0.112	0.060	982.00	525.60
518	Exterior Lighting	Parking Lots	Campus Walkway	20	204	PO-ACORN-MH175/1-GLOBE	Acorn Type Post Top Luminaire Pole Mounted Metal Halide, (1) 175W lamp Globe Diffuser	20	27	LEDSI/COB LEDS27/1	Pole Mounted Chip On Board (COB) Type Screw-in / Bypass Existing Ballast Light Emitting Diode Lamp, Screw-in, (1) 27W lamp	4368	Exterior	4.085	0.540	17843.28	2358.72

Line #	Facility	Area	Space	Pre Fixture Qty	Pre Wattage	Pre Code	Pre Description	Post Fixture Qty	Post Wattage	Post Code	Post Description	Hours Pre	Hours Code	Base kW	Retro Proposed kW	Base kWh	Retro Proposed kWh
519	Exterior Lighting	Parking Lots	Campus Walkway	2	181	PO-LANTERN-MH150/1-FGL	Lantern Style Light Pole Mounted Metal Halide, (1) 150W lamp Flat Glass Lens	2	27	LEDS/COB LEDS27/1	Pole Mounted Chip On Board (COB) Type Screw-in / Bypass Existing Ballast Light Emitting Diode Lamp, Screw-in, (1) 27W lamp	4368	Exterior	0.361	0.054	1576.85	235.87
[illegible]	Exterior Lighting	Parking Lots	Bus Stop	3	90	S-CANOPY-HPS70/1-MW	Canopy Fixture Surface Mounted High Pressure Sodium, (1) 70W lamp Milk-White Plastic Diffuser	3	10	CANOPY LED10W	Surface Mounted Canopy Fixture LED Light Fixture. (1) 10W	4368	Exterior	0.271	0.030	1182.64	131.04
[illegible]	Exterior Lighting	Parking Lots	Bus Stop	1	90	WM-CANOPY-HPS70/1-MW	Canopy Fixture Wall Mounted High Pressure Sodium (1) 70W lamp Milk-White Plastic Diffuser	1	10	CANOPY LED10W	Wall Mounted Canopy Fixture LED Light Fixture. (1) 10W	4368	Exterior	0.090	0.010	394.21	43.68
522	Exterior Lighting	Parking Lots	Hartzell Parking Lot	12	280	PO-SBX-MH250/1-FGL	Shoebox Fixture Pole Mounted Metal Halide, (1) 250W lamp Flat Glass Lens	12	78	SBX LED78W	Pole Mounted Shoebox Fixture LED Light Fixture. (1) 78W - HIGH	4368	Exterior	3.363	0.936	14689.58	4088.45
523	Exterior Lighting	Parking Lots	MAC Parking	4	195	ARM-DD-MV175/1-PR	Dusk to Dawn/Barn Light Arm Mounted Mercury Vapor, (1) 175W lamp Prismatic Acrylic Diffuser	4	26	DD LED26W	Arm Mounted Dusk to Dawn/Barn Light LED Light Fixture. (1) 26W - HIGH	4368	Exterior	0.779	0.104	3402.67	454.27
524	Exterior Lighting	Building Exteriors	Hartzell Student Services	1	68	S-S8-F42EE-NL	8' Strip Surface Mounted Fluorescent, (2) 48", ES lamp (No Diffuser)	1	30	LEDT8 LEDT8/4/15W/2	Surface Mounted T8 LED Retrofit Lamp with External Driver LED 4' T8 Lamp (2) 15W Lamps	4368	Exterior	0.068	0.030	298.77	131.04
525	Exterior Lighting	Building Exteriors	Hartzell Student Services	1	41	S-S4-F41EE-NL	4' Strip Surface Mounted Fluorescent, (1) 48", ES lamp (No Diffuser)	1	15	LEDT8 LEDT8/4/15W/1	Surface Mounted T8 LED Retrofit Lamp with External Driver LED 4' T8 Lamp (1) 15W Lamp	4368	Exterior	0.041	0.015	178.43	65.52
526	Exterior Lighting	Building Exteriors	Hartzell Student Services	1	90	WM-WP-MH70/1-PR	Wall-Pack Wall Mounted Metal Halide, (1) 70W lamp Prismatic Acrylic Diffuser	1	12	WP LED12W	Wall Mounted Wall-Pack LED Light Fixture. (1) 12W	4368	Exterior	0.090	0.012	394.21	52.42
527	Exterior Lighting	Building Exteriors	Hartzell Student Services	4	280	WM-WP-MH250/1-PR	Wall-Pack Wall Mounted Metal Halide, (1) 250W lamp Prismatic Acrylic Diffuser	4	50	WP LED50W	Wall Mounted Wall-Pack LED Light Fixture. (1) 50W	4368	Exterior	1.121	0.200	4896.53	873.60
528	Exterior Lighting	Building Exteriors	Maintenance Building / Warehouse	11	280	WM-WP-MH250/1-PR	Wall-Pack Wall Mounted Metal Halide, (1) 250W lamp Prismatic Acrylic Diffuser	11	50	WP LED50W	Wall Mounted Wall-Pack LED Light Fixture. (1) 50W	4368	Exterior	3.083	0.550	13465.45	2402.40
529	Exterior Lighting	Building Exteriors	Maintenance Building / Warehouse	1	57	WM-JJ-I60/1-JJG	Jelly Jar Wall Mounted Incandescent, (1) 60W lamp Glass Jelly Jar	1	12	LEDS/A LEDS12/1	Wall Mounted Install LED Screw-in A-Style Lamp Light Emitting Diode Lamp, Screw-in, (1) 12W lamp	4368	Exterior	0.057	0.012	248.98	52.42
530	Exterior Lighting	Building Exteriors	Schwalm Student Center	2	280	WM-WP-MH250/1-PR	Wall-Pack Wall Mounted Metal Halide, (1) 250W lamp Prismatic Acrylic Diffuser	2	50	WP LED50W	Wall Mounted Wall-Pack LED Light Fixture. (1) 50W	4368	Exterior	0.561	0.100	2448.26	436.80
531	Exterior Lighting	Building Exteriors	Schwalm Student Center	1	122	WM-WP-MH100/1-PR	Wall-Pack Wall Mounted Metal Halide, (1) 100W lamp Prismatic Acrylic Diffuser	1	20	WP LED20W	Wall Mounted Wall-Pack LED Light Fixture. (1) 20W	4368	Exterior	0.122	0.020	531.15	87.36
532	Exterior Lighting	Building Exteriors	Schwalm Student Center	5	22	WM-HH-CFS23/1-NL	High-Hat Wall Mounted Compact Fluorescent, spiral, (1) 23W lamp (No Diffuser)	5	10	LEDS/BR30 LEDS10/1	Wall Mounted Install LED Screw-in BR30 Lamp Light Emitting Diode Lamp, Screw-in, (1) 10W lamp	4368	Exterior	0.109	0.050	477.20	218.40
533	Exterior Lighting	Building Exteriors	Schwalm Student Center	1	1026	SF-FLOOD-MH1000/1-FGL	Flood Light Stipfitter Metal Halide, (1) 1000W lamp Flat Glass Lens	1	300	FLOOD LED300W	Stipfitter Flood Light LED Light Fixture. (1) 300W - HIGH	4368	Exterior	1.026	0.300	4481.57	1310.40
534	Exterior Lighting	Building Exteriors	Schwalm Student Center	1	76	SF-FLOOD-LED80W-FGL	Flood Light Stipfitter LED Light Fixture. (1) 80W Flat Glass Lens	1	76	N/R NONE	Stipfitter No Retrofit. To remain as is.	4368	Exterior	0.076	0.076	331.97	331.97
535	Exterior Lighting	Building Exteriors	Schuler Learning Center	4	280	WM-WP-MH250/1-PR	Wall-Pack Wall Mounted Metal Halide, (1) 250W lamp Prismatic Acrylic Diffuser	4	50	WP LED50W	Wall Mounted Wall-Pack LED Light Fixture. (1) 50W	4368	Exterior	1.121	0.200	4896.53	873.60
536	Exterior Lighting	Building Exteriors	Schuler Learning Center	5	11	WM-WP-LED12W-PR	Wall-Pack Wall Mounted LED Light Fixture. (1) 12W Prismatic Acrylic Diffuser	5	11	N/R NONE	Wall Mounted No Retrofit. To remain as is.	4368	Exterior	0.057	0.057	248.98	248.98
537	Exterior Lighting	Building Exteriors	Schuler Learning Center	1	25	YK-FLOOD-LED26W-FGL	Flood Light Yoke Mount LED Light Fixture. (1) 26W Flat Glass Lens	1	25	N/R NONE	Yoke Mount No Retrofit. To remain as is.	4368	Exterior	0.025	0.025	107.89	107.89
538	Exterior Lighting	Building Exteriors	Schuler Learning Center	2	57	WM-JJ-I60/1-JJG	Jelly Jar Wall Mounted Incandescent, (1) 60W lamp Glass Jelly Jar	2	12	LEDS/A LEDS12/1	Wall Mounted Install LED Screw-in A-Style Lamp Light Emitting Diode Lamp, Screw-in, (1) 12W lamp	4368	Exterior	0.114	0.024	497.95	104.83
539	Exterior Lighting	Building Exteriors	Schuler Learning Center	22	22	R-REC/6-CFS23/1-NL	Recessed Can 6" Recessed Compact Fluorescent, spiral, (1) 23W lamp (No Diffuser)	22	10	LEDS/BR30 LEDS10/1	Recessed Install LED Screw-in BR30 Lamp Light Emitting Diode Lamp, Screw-in, (1) 10W lamp	4368	Exterior	0.481	0.220	2099.70	960.96
540	Exterior Lighting	Building Exteriors	Schuler Learning Center	8	22	R-REC/6-CFS23/1-NL	Recessed Can 6" Recessed Compact Fluorescent, spiral, (1) 23W lamp (No Diffuser)	8	10	LEDS/BR30 LEDS10/1	Recessed Install LED Screw-in BR30 Lamp Light Emitting Diode Lamp, Screw-in, (1) 10W lamp - HIGH	4368	Exterior	0.175	0.080	763.53	349.44
541	Exterior Lighting	Building Exteriors	Schuler Learning Center	8	16	WM-KICK-CFT13/1-SL	Recessed Kick Light (Walkway) Wall Mounted Compact Fluorescent, twin, (1) 13W lamp Slotted Metal Diffuser	8	16	N/R NONE	Wall Mounted No Retrofit. To remain as is.	4368	Exterior	0.129	0.129	564.35	564.35
542	Exterior Lighting	Building Exteriors	Schuler Learning Center	1	280	WM-WP-MH250/1-PR	Wall-Pack Wall Mounted Metal Halide, (1) 250W lamp Prismatic Acrylic Diffuser	1	50	WP LED50W	Wall Mounted Wall-Pack LED Light Fixture. (1) 50W	4368	Exterior	0.280	0.050	1224.13	218.40
543	Exterior Lighting	Building Exteriors	Jones Dining Hall	6	25	WM-WP-LED26W-PR	Wall-Pack Wall Mounted LED Light Fixture. (1) 26W Prismatic Acrylic Diffuser	6	25	N/R NONE	Wall Mounted No Retrofit. To remain as is	4368	Exterior	0.148	0.148	647.34	647.34
[illegible]	Exterior Lighting	Building Exteriors	Jones Dining Hall	1	31	WM-WP-CFQ26/1-PR	Wall-Pack Wall Mounted Compact Fluorescent, quad, (1) 26W lamp Prismatic Acrylic Diffuser	1	12	WP LED12W	Wall Mounted Wall-Pack LED Light Fixture. (1) 12W	4368	Exterior	0.031	0.012	136.94	52.42
545	Exterior Lighting	Building Exteriors	Jones Dining Hall	4	12	WM-WP-LED13W-PR	Wall-Pack Wall Mounted LED Light Fixture. (1) 13W Prismatic Acrylic Diffuser	4	12	N/R NONE	Wall Mounted No Retrofit. To remain as is.	4368	Exterior	0.049	0.049	215.78	215.78
546	Exterior Lighting	Building Exteriors	Metzger Hall	1	280	WM-WP-MH250/1-PR	Wall-Pack Wall Mounted Metal Halide, (1) 250W lamp Prismatic Acrylic Diffuser	1	50	WP LED50W	Wall Mounted Wall-Pack LED Light Fixture. (1) 50W	4368	Exterior	0.280	0.050	1224.13	218.40
547	Exterior Lighting	Building Exteriors	Metzger Hall	1	280	YK-FLOOD-MH250/1-FGL	Flood Light Yoke Mount Metal Halide, (1) 250W lamp Flat Glass Lens	1	80	FLOOD LED80W	Yoke Mount Flood Light LED Light Fixture. (1) 80W	4368	Exterior	0.280	0.080	1224.13	349.44
548	Exterior Lighting	Building Exteriors	Metzger Hall	2	57	WM-JJ-I60/1-JJG	Jelly Jar Wall Mounted Incandescent, (1) 60W lamp Glass Jelly Jar	2	12	LEDS/A LEDS12/1	Wall Mounted Install LED Screw-in A-Style Lamp Light Emitting Diode Lamp, Screw-in, (1) 12W lamp	4368	Exterior	0.114	0.024	497.95	104.83
549	Exterior Lighting	Building Exteriors	Metzger Hall	4	22	R-1X1-CFS23/1-GFRS	1'x1' Square Recessed Compact Fluorescent, spiral, (1) 23W lamp Square Glass Fresnel Lens	4	12	LEDS/A LEDS12/1	Recessed Install LED Screw-in A-Style Lamp Light Emitting Diode Lamp, Screw-in, (1) 12W lamp	4368	Exterior	0.087	0.048	381.76	209.66
550	Exterior Lighting	Building Exteriors	Metzger Hall	2	90	WM-WP-HPS70/1-PR	Wall-Pack Wall Mounted High Pressure Sodium, (1) 70W lamp Prismatic Acrylic Diffuser	2	12	WP LED12W	Wall Mounted Wall-Pack LED Light Fixture. (1) 12W	4368	Exterior	0.181	0.024	788.42	104.83
551	Exterior Lighting	Building Exteriors	Bourne Hall	1	280	WM-WP-MH250/1-PR	Wall-Pack Wall Mounted Metal Halide, (1) 250W lamp Prismatic Acrylic Diffuser	1	50	WP LED50W	Wall Mounted Wall-Pack LED Light Fixture. (1) 50W	4368	Exterior	0.280	0.050	1224.13	218.40
552	Exterior Lighting	Building Exteriors	Bourne Hall	4	57	WM-JJ-I60/1-JJG	Jelly Jar Wall Mounted Incandescent, (1) 60W lamp Glass Jelly Jar	4	12	LEDS/A LEDS12/1	Wall Mounted Install LED Screw-in A-Style Lamp Light Emitting Diode Lamp, Screw-in, (1) 12W lamp	4368	Exterior	0.228	0.048	995.90	209.66
553	Exterior Lighting	Building Exteriors	Bourne Hall	4	22	R-1X1-CFS23/1-GFRS	1'x1' Square Recessed Compact Fluorescent, spiral, (1) 23W lamp Square Glass Fresnel Lens	4	12	LEDS/A LEDS12/1	Recessed Install LED Screw-in A-Style Lamp Light Emitting Diode Lamp, Screw-in, (1) 12W lamp	4368	Exterior	0.087	0.048	381.76	209.66
554	Exterior Lighting	Building Exteriors	Bourne Hall	1	280	WM-WP-MH250/1-PR	Wall-Pack Wall Mounted Metal Halide, (1) 250W lamp Prismatic Acrylic Diffuser	1	50	WP LED50W	Wall Mounted Wall-Pack LED Light Fixture. (1) 50W	4368	Exterior	0.280	0.050	1224.13	218.40
555	Exterior Lighting	Building Exteriors	Harrington Hall	7	11	WM-WP-LED12W-PR	Wall-Pack Wall Mounted LED Light Fixture. (1) 12W Prismatic Acrylic Diffuser	7	11	N/R NONE	Wall Mounted No Retrofit. To remain as is.	4368	Exterior	0.080	0.080	348.57	348.57
556	Exterior Lighting	Building Exteriors	Harrington Hall	1	12	WM-WP-LED13W-PR	Wall-Pack Wall Mounted LED Light Fixture. (1) 13W Prismatic Acrylic Diffuser	1	12	N/R NONE	Wall Mounted No Retrofit. To remain as is.	4368	Exterior	0.012	0.012	53.94	53.94
557	Exterior Lighting	Building Exteriors	Armstrong Hall	7	11	WM-WP-LED12W-PR	Wall-Pack Wall Mounted LED Light Fixture. (1) 12W Prismatic Acrylic Diffuser	7	11	N/R NONE	Wall Mounted No Retrofit. To remain as is.	4368	Exterior	0.080	0.080	348.57	348.57
558	Exterior Lighting	Building Exteriors	Armstrong Hall	1	25	WM-WP-LED26W-PR	Wall-Pack Wall Mounted LED Light Fixture. (1) 26W Prismatic Acrylic Diffuser	1	25	N/R NONE	Wall Mounted No Retrofit. To remain as is.	4368	Exterior	0.025	0.025	107.89	107.89
559	Exterior Lighting	Building Exteriors	Brenner Hall	2	280	WM-WP-MH250/1-PR	Wall-Pack Wall Mounted Metal Halide, (1) 250W lamp Prismatic Acrylic Diffuser	2	50	WP LED50W	Wall Mounted Wall-Pack LED Light Fixture. (1) 50W	4368	Exterior	0.561	0.100	2448.26	436.80
560	Exterior Lighting	Building Exteriors	Brenner Hall	3	31	WM-DRUM-CFQ26/1-PR	Drum Wall Mounted Compact Fluorescent, quad, (1) 26W lamp Prismatic Acrylic Diffuser	3	10	CANOPY LED10W	Wall Mounted Canopy Fixture LED Light Fixture. (1) 10W	4368	Exterior	0.094	0.030	410.81	131.04
561	Exterior Lighting	Building Exteriors	Brenner Hall	1	90	WM-WP-HPS70/1-PR	Wall-Pack Wall Mounted High Pressure Sodium, (1) 70W lamp Prismatic Acrylic Diffuser	1	12	WP LED12W	Wall Mounted Wall-Pack LED Light Fixture. (1) 12W	4368	Exterior	0.090	0.012	394.21	52.42
562	Exterior Lighting	Building Exteriors	Brenner Hall	1	57	S-GLOBE-I60/1-GLOBE	Globe Surface Mounted Incandescent, (1) 60W lamp Globe Diffuser	1	12	LEDS/A LEDS12/1	Surface Mounted Install LED Screw-in A-Style Lamp Light Emitting Diode Lamp, Screw-in, (1) 12W lamp	4368	Exterior	0.057	0.012	248.98	52.42
563	Exterior Lighting	Building Exteriors	Meiser Building	1	280	S-CANOPY-MH250/1-PR	Canopy Fixture Surface Mounted Metal Halide, (1) 250W lamp Prismatic Acrylic Diffuser	1	75	CANOPY LED75W	Surface Mounted Canopy Fixture LED Light Fixture. (1) 75W	4368	Exterior	0.280	0.075	1224.13	327.60
564	Exterior Lighting	Building Exteriors	Meiser Building	3	114	WM-JJ-I60/2-JJG	Jelly Jar Wall Mounted Incandescent, (2) 60W lamp Glass Jelly Jar	6	12	LEDS/A LEDS12/1	Wall Mounted Install LED Screw-in A-Style Lamp Light Emitting Diode Lamp, Screw-in, (1) 12W lamp	4368	Exterior	0.342	0.072	1493.86	314.50
565	Exterior Lighting	Building Exteriors	Meiser Building	2	122	WM-ACORN-MH100/1-GLOBE	Acorn Type Post Top Luminaire Wall Mounted Metal Halide, (1) 100W lamp Globe Diffuser	2	27	LEDS/COB LEDS27/1	Wall Mounted Chip On Board (COB) Type Screw-in / Bypass Existing Ballast Light Emitting Diode Lamp, Screw-in, (1) 27W lamp	4368	Exterior	0.243	0.054	1062.30	235.87
566	Exterior Lighting	Building Exteriors	Meiser Building	2	1026	GND-FLOOD-MH1000/1-FGL	Flood Light Ground Mounted Metal Halide, (1) 1000W lamp Flat Glass Lens	2	125	FLOOD LED125W	Ground Mounted Flood Light LED Light Fixture. (1) 125W	4368	Exterior	2.052	0.250	8963.14	1092.00
567	Exterior Lighting	Building Exteriors	Meiser Building	4	57	WM-JJ-I60/1-JJG	Jelly Jar Wall Mounted Incandescent, (1) 60W lamp Glass Jelly Jar	4	12	LEDS/A LEDS12/1	Wall Mounted Install LED Screw-in A-Style Lamp Light Emitting Diode Lamp, Screw-in, (1) 12W lamp	4368	Exterior	0.228	0.048	995.90	209.66
[illegible]	Exterior Lighting	Building Exteriors	Meiser Building	2	280	WM-WP-MH250/1-PR	Wall-Pack Wall Mounted Metal Halide, (1) 250W lamp Prismatic Acrylic Diffuser	2	50	WP LED50W	Wall Mounted Wall-Pack LED Light Fixture. (1) 50W	4368	Exterior	0.561	0.100	2448.26	436.80
569	Exterior Lighting	Building Exteriors	Kreider Building	2	38	R-REC/6-CFS40/1-NL	Recessed Can 6" Recessed Compact Fluorescent, spiral, (1) 40W lamp (No Diffuser)	2	10	LEDS/BR30 LEDS10/1	Recessed Install LED Screw-in BR30 Lamp Light Emitting Diode Lamp, Screw-in, (1) 10W lamp	4368	Exterior	0.076	0.020	331.97	87.36
570	Exterior Lighting	Building Exteriors	Kreider Building	1	280	WM-WP-MH250/1-PR	Wall-Pack Wall Mounted Metal Halide, (1) 250W lamp Prismatic Acrylic Diffuser	1	50	WP LED50W	Wall Mounted Wall-Pack LED Light Fixture. (1) 50W	4368	Exterior	0.280	0.050	1224.13	218.40

Line #	Facility	Area	Space	Pre Fixture Qty	Pre Wattage	Pre Code	Pre Description	Post Fixture Qty	Post Wattage	Post Code	Post Description	Hours Pre	Hours Code	Base kW	Retro Proposed kW	Base kWh	Retro Proposed kWh
571	Exterior Lighting	Building Exteriors	Kreider Building	2	1026	SF-FLOOD-MH1000/1-FGL	Flood Light Slipfitter Metal Halide, (1) 1000W lamp Flat Glass Lens	2	300	FLOOD LED300W	Slipfitter Flood Light LED Light Fixture (1) 300W - HIGH	4368	Exterior	2.052	0.600	8963.14	2620.80
572	Exterior Lighting	Building Exteriors	Kreider Building	5	12	WM-WP-CFS13/1-PR	Wall-Pack Wall Mounted Compact Fluorescent, spiral, (1) 13W lamp Prismatic Acrylic Diffuser	5	12	WP LED12W	Wall Mounted Wall-Pack LED Light Fixture. (1) 12W	4368	Exterior	0.062	0.060	269.72	262.0[illegible]
573	Exterior Lighting	Building Exteriors	Kreider Building	2	12	WM-WP-LED13W-PR	Wall-Pack Wall Mounted LED Light Fixture. (1) 13W Prismatic Acrylic Diffuser	2	12	N/R NONE	Wall Mounted No Retrofit. To remain as is.	4368	Exterior	0.025	0.025	107.89	107
574	Exterior Lighting	Building Exteriors	Kreider Building	1	435	YK-FLOOD-MH400/1-FGL	Flood Light Yoke Mount Metal Halide, (1) 400W lamp Flat Glass Lens	1	125	FLOOD LED125W	Yoke Mount Flood Light LED Light Fixture. (1) 125W	4368	Exterior	0.435	0.125	1900.52	546.00
575	Exterior Lighting	Building Exteriors	Alumni House / College Store	2	22	R-REC/6-CFS23/1-NL	Recessed Can 6" Recessed Compact Fluorescent, spiral, (1) 23W lamp (No Diffuser)	2	10	LEDSI/BR30 LEDS10/1	Recessed Install LED Screw-in BR30 Lamp Light Emitting Diode Lamp, Screw-in, (1) 10W lamp	4368	Exterior	0.044	0.020	190.68	87.36
576	Exterior Lighting	Building Exteriors	Alumni House / College Store	1	12	WM-JJ-CFS13/1-JJG	Jelly Jar Wall Mounted Compact Fluorescent, spiral, (1) 13W lamp Glass Jelly Jar	1	12	N/R NONE	Wall Mounted No Retrofit. To remain as is.	4368	Exterior	0.012	0.012	53.94	53.94
577	Exterior Lighting	Building Exteriors	Alumni House / College Store	4	90	WM-WP-HPS70/1-PR	Wall-Pack Wall Mounted High Pressure Sodium, (1) 70W lamp Prismatic Acrylic Diffuser	4	12	WP LED12W	Wall Mounted Wall-Pack LED Light Fixture. (1) 12W	4368	Exterior	0.361	0.048	1576.85	209.66
578	Exterior Lighting	Building Exteriors	Alumni House / College Store	1	475	GND-FLOOD-H500/1-FGL	Flood Light Ground Mounted Halogen Incandescent, (1) 500W lamp Flat Glass Lens	1	26	FLOOD LED26W	Ground Mounted Flood Light LED Light Fixture. (1) 26W	4368	Exterior	0.475	0.026	2074.80	113.57
579	Exterior Lighting	Building Exteriors	Alumni House / College Store	1	57	S-GLOBE-I60/1-GLOBE	Globe Surface Mounted Incandescent, (1) 60W lamp Globe Diffuser	1	12	LEDSI/A LEDS12/1	Surface Mounted Install LED Screw-in A-Style Lamp Light Emitting Diode Lamp, Screw-in, (1) 12W lamp	4368	Exterior	0.057	0.012	248.98	52.42
580	Exterior Lighting	Building Exteriors	Development and Advancement Office (Residential)	1	57	WM-SCONCE-I60/1-PR	Wall Sconce Wall Mounted Incandescent, (1) 60W lamp Prismatic Acrylic Diffuser	1	11	LEDSI/A LEDS11/1	Wall Mounted Install LED Screw-in A-Style Lamp Light Emitting Diode Lamp, Screw-in, (1) 11W lamp	4368	Exterior	0.057	0.011	248.98	48.05
581	Exterior Lighting	Building Exteriors	Development and Advancement Office (Residential)	1	280	WM-WP-MH250/1-PR	Wall-Pack Wall Mounted Metal Halide, (1) 250W lamp Prismatic Acrylic Diffuser	1	50	WP LED50W	Wall Mounted Wall-Pack LED Light Fixture. (1) 50W	4368	Exterior	0.280	0.050	1224.13	218.40
582	Exterior Lighting	Building Exteriors	Leonard Building	6	280	WM-WP-MH250/1-PR	Wall-Pack Wall Mounted Metal Halide, (1) 250W lamp Prismatic Acrylic Diffuser	6	50	WP LED50W	Wall Mounted Wall-Pack LED Light Fixture. (1) 50W	4368	Exterior	1.682	0.300	7344.79	1310.40
583	Exterior Lighting	Building Exteriors	Leonard Building	1	114	WM-JJ-I60/2-JJG	Jelly Jar Wall Mounted Incandescent, (2) 60W lamp Glass Jelly Jar	2	12	LEDSI/A LEDS12/1	Wall Mounted Install LED Screw-in A-Style Lamp Light Emitting Diode Lamp, Screw-in, (1) 12W lamp	4368	Exterior	0.114	0.024	497.95	104.83
584	Exterior Lighting	Building Exteriors	Leonard Building	2	16	WM-JJ-CFT13/1-JJG	Jelly Jar Wall Mounted Compact Fluorescent, twin, (1) 13W lamp Glass Jelly Jar	2	12	WP LED12W	Wall Mounted Wall-Pack LED Light Fixture. (1) 12W	4368	Exterior	0.032	0.024	141.09	104.83
585	Exterior Lighting	Building Exteriors	Leonard Building	1	131	SF-FLOOD-HPS100/1-FGL	Flood Light Slipfitter High Pressure Sodium, (1) 100W lamp Flat Glass Lens	1	26	FLOOD LED26W	Slipfitter Flood Light LED Light Fixture. (1) 26W	4368	Exterior	0.131	0.026	572.64	113.57
586	Exterior Lighting	Building Exteriors	Multipurpose Activity Center / Stauffer Gym	1	25	YK-FLOOD-LED26W-FGL	Flood Light Yoke Mount LED Light Fixture. (1) 26W Flat Glass Lens	1	25	N/R NONE	Yoke Mount No Retrofit. To remain as is.	4368	Exterior	0.025	0.025	107.89	107.89
587	Exterior Lighting	Building Exteriors	Multipurpose Activity Center / Stauffer Gym	7	122	WM-REC/6-MH100/1-NL	Recessed Can 6" Wall Mounted Metal Halide, (1) 100W lamp (No Diffuser)	7	27	LEDSI/COB LEDS27/1	Wall Mounted Chip On Board (COB) Type Screw-in / Bypass Existing Ballast Light Emitting Diode Lamp, Screw-in, (1) 27W lamp	4368	Exterior	0.851	0.189	3718.04	825.55
588	Exterior Lighting	Building Exteriors	Multipurpose Activity Center / Stauffer Gym	26	181	WM-WP-MH150/1-SC	Wall-Pack Wall Mounted Metal Halide, (1) 150W lamp Styled/Custom Diffuser	26	20	WP LED20W	Wall Mounted Wall-Pack LED Light Fixture. (1) 20W	4368	Exterior	4.693	0.520	20499.02	2271.36
589	Exterior Lighting	Building Exteriors	Multipurpose Activity Center / Stauffer Gym	2	90	S-CANOPY-MH70/1-FGL	Canopy Fixture Surface Mounted Metal Halide, (1) 70W lamp Flat Glass Lens	2	10	CANOPY LED10W	Surface Mounted Canopy Fixture LED Light Fixture. (1) 10W	4368	Exterior	0.181	0.020	788.42	87.36
590	Exterior Lighting	Building Exteriors	Multipurpose Activity Center / Stauffer Gym	2	63	WM-HH-CFQ26/2-JJG	High-Hat Wall Mounted Compact Fluorescent, quad, (2) 26W lamp Glass Jelly Jar	2	63	N/R NONE	Wall Mounted No Retrofit. To remain as is.	4368	Exterior	0.125	0.125	547.75	547.75
591	Exterior Lighting	Building Exteriors	Field House	2	280	WM-WP-MH250/1-PR	Wall-Pack Wall Mounted Metal Halide, (1) 250W lamp Prismatic Acrylic Diffuser	2	50	WP LED50W	Wall Mounted Wall-Pack LED Light Fixture. (1) 50W	4368	Exterior	0.561	0.100	2448.26	436.80
592	Exterior Lighting	Building Exteriors	Woolworth & Snyder Building	9	280	WM-WP-MH250/1-PR	Wall-Pack Wall Mounted Metal Halide, (1) 250W lamp Prismatic Acrylic Diffuser	9	50	WP LED50W	Wall Mounted Wall-Pack LED Light Fixture. (1) 50W	4368	Exterior	2.522	0.450	11017.19	1965.60
593	Exterior Lighting	Building Exteriors	Woolworth & Snyder Building	2	22	R-1X1-CFS23/1-GFRS	1'x1' Square Recessed Compact Fluorescent, spiral, (1) 23W lamp Square Glass Fresnel Lens	2	12	LEDSI/A LEDS12/1	Recessed Install LED Screw-in A-Style Lamp Light Emitting Diode Lamp, Screw-in, (1) 12W lamp	4368	Exterior	0.044	0.024	190.68	104.83
594	Exterior Lighting	Building Exteriors	Woolworth & Snyder Building	6	90	WM-WP-HPS70/1-PR	Wall-Pack Wall Mounted High Pressure Sodium, (1) 70W lamp Prismatic Acrylic Diffuser	6	12	WP LED12W	Wall Mounted Wall-Pack LED Light Fixture. (1) 12W	4368	Exterior	0.542	0.072	2365.27	314.50
595	Exterior Lighting	Building Exteriors	Woolworth & Snyder Building	9	17	WM-WP-LED18W-PR	Wall-Pack Wall Mounted LED Light Fixture. (1) 18W Prismatic Acrylic Diffuser	9	17	N/R NONE	Wall Mounted No Retrofit. To remain as is.	4368	Exterior	0.154	0.154	672.24	672.24
596	Exterior Lighting	Building Exteriors	Woolworth & Snyder Building	1	25	WM-WP-LED26W-PR	Wall-Pack Wall Mounted LED Light Fixture. (1) 26W Prismatic Acrylic Diffuser	1	25	N/R NONE	Wall Mounted No Retrofit. To remain as is.	4368	Exterior	0.025	0.025	107.89	107.[illegible]
	Totals																

ECM 4.2 - Evaluate campus transformer efficiency losses and upgrade opportunities, including building service entrance equipment.

The end use analysis performed by TEN showed that many of the distribution transformers are over-sized. Much of this is due to the removal for some buildings and he change in use of other buildings.

Transformers are designed to be most efficient at a 50 % load this was done to make the transformer efficiency over the typical operating ranges. However, it was found that most of the transformers are over-sized by a large percentage. Over-sized transformers are inefficient and waste energy. Additionally, the majority of the distribution transformers are quite old. So old that TEN had to bring in a service team from the GE and still one of the transformers was in such bad shape that it could not be opened.

The distribution panel in the Mellor Building was found to be very old and in poor condition as well. TEN was able to find a new more efficient and reliable distribution panel for the Mellor Building but the old unit was so old performance data could not be located. No savings for the distribution panels was included in this proposal but will be added during the IGA.

In this ECM TEN provided the most benefit to the facility in terms of economic gain and increased reliability. The new distribution transformers will be right-sized with new modern transformers which will save energy and increase the reliability of the aging campus infra-structure. The replacement of the distribution panel in the Mellor Building will provide the same benefit.

Additionally, this upgraded infrastructure will allow for the installation of a 2 MW battery storage system that will improve the reliability and power quality of the electricity on the campus and the general area surrounding the campus. It is designated to improve the wave form shape of the electricity and maintain the 60 hertz frequency of the power that all modern systems depend upon. This is so important to the utility company that they will pay for the benefit the batteries provide to the grid outside of the campus through the PJM frequency regulation program. Additionally, these batteries will provide the campus some ride-through protection in the event of electric outages that will allow more time to save critical data and start back-up generators.

TEN will install 2MW of battery storage that will be used in the PJM Frequency Regulation program to maintain the electrical grid frequency at 60 Hz. Typical programs since 2012 have yielded approximately $600,000 per year with a performance score of 95% uptime or 8,300 hours per year. For the purpose of this project a conservative annual revenue of only $393,947 was included in the project payback. The revenue generated above the this conservative $393,947 will be turned over to Thaddeus Stevens.

The 2MW Lithium-Ion battery storage system is a self-contained containerized unit that contains its own heating, cooling and fire suppression systems. The container will probably be located close to the electrical feeder in Maintenance Building to minimize connection lengths.

The actual location of the connect may change depending on the results of the PJM interconnection Study. This study will begin as soon as the project is approved by Thaddeus Stevens.

The inside of the battery storage container will look similar to the picture below:

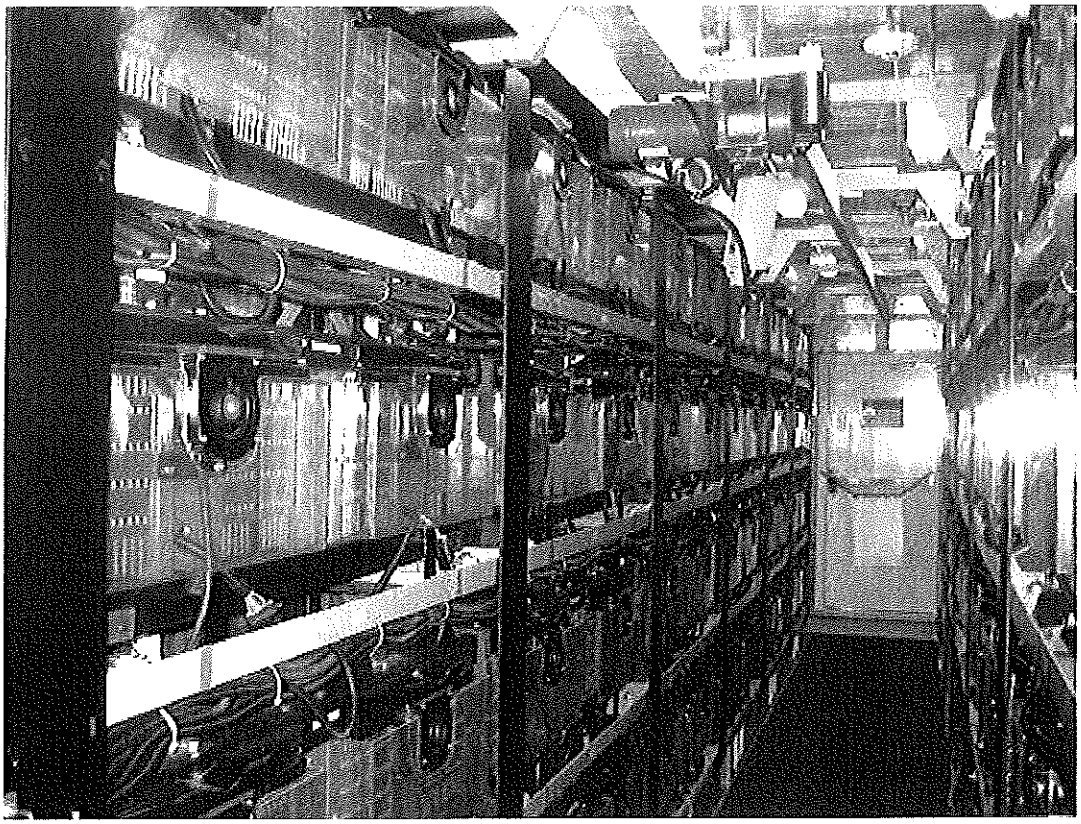

The sizing of the new distribution transformers and the savings that they will provide is based upon the end-use analysis performed by TEN. TEN recommended that the electrical sub metering be performed as the first step in the project to allow for adjustment of the end-use analysis for each of the distribution transformers and the buildings they feed. The adjusted end-use analysis may change the size of the distribution transformers being installed.

The transformer estimates based on the end-use analysis is shown on the next page. The following two pages provide a one-line analysis of the current distribution transformers and the next page shows a one-line of the new proposed distribution transformers.

*Building name	Building Square Footage	Transformer Total kWh	Transformer Total $ Elect
MELLOR BUILDING	37,780	38,555	$2,883
KENNETH W SCHULER RESOURCE CENTER	49,128	29,490	$2,205
KREIDER BLDG	34,548	16,123	$1,206
SCHEWALM STUDENT CENTER	7,338	9,777	$731
BRENNER HALL	10,488	10,302	$770
MULTI-PURPOSE ACTIVITY CENTER	50,020	204,718	$15,306
LEONARD BLDG	32,978	12,803	$957
BOURNE HALL	8,385	17,731	$1,326
METZGER HALL	8,385	17,731	$1,326
WOOLWORTH BLDG	16,519	8,456	$632
MAINTENANCE HEATING	16,786	5,234	$391
HERRINGTON HALL	25,176	53,236	$3,980
ARMSTRONG HALL	25,176	53,236	$3,980
JONES DINING HALL	22,728	22,324	$1,669
HARTZELL BUILDING	10,800	8,634	$646
SNYDER BUILDING	37,647	16,826	$1,258
	393,882	525,174	$39,266

Some existing transformers are very lightly loaded which lowers the transformer efficiency.

Existing Transformer Efficiency	87%
Proposed Transformer Efficiency	98%
Transformer Savings in kWh	4,407
Transformer Savings in dollars	$4,407

REPLACEMENT TRANSFORMERS

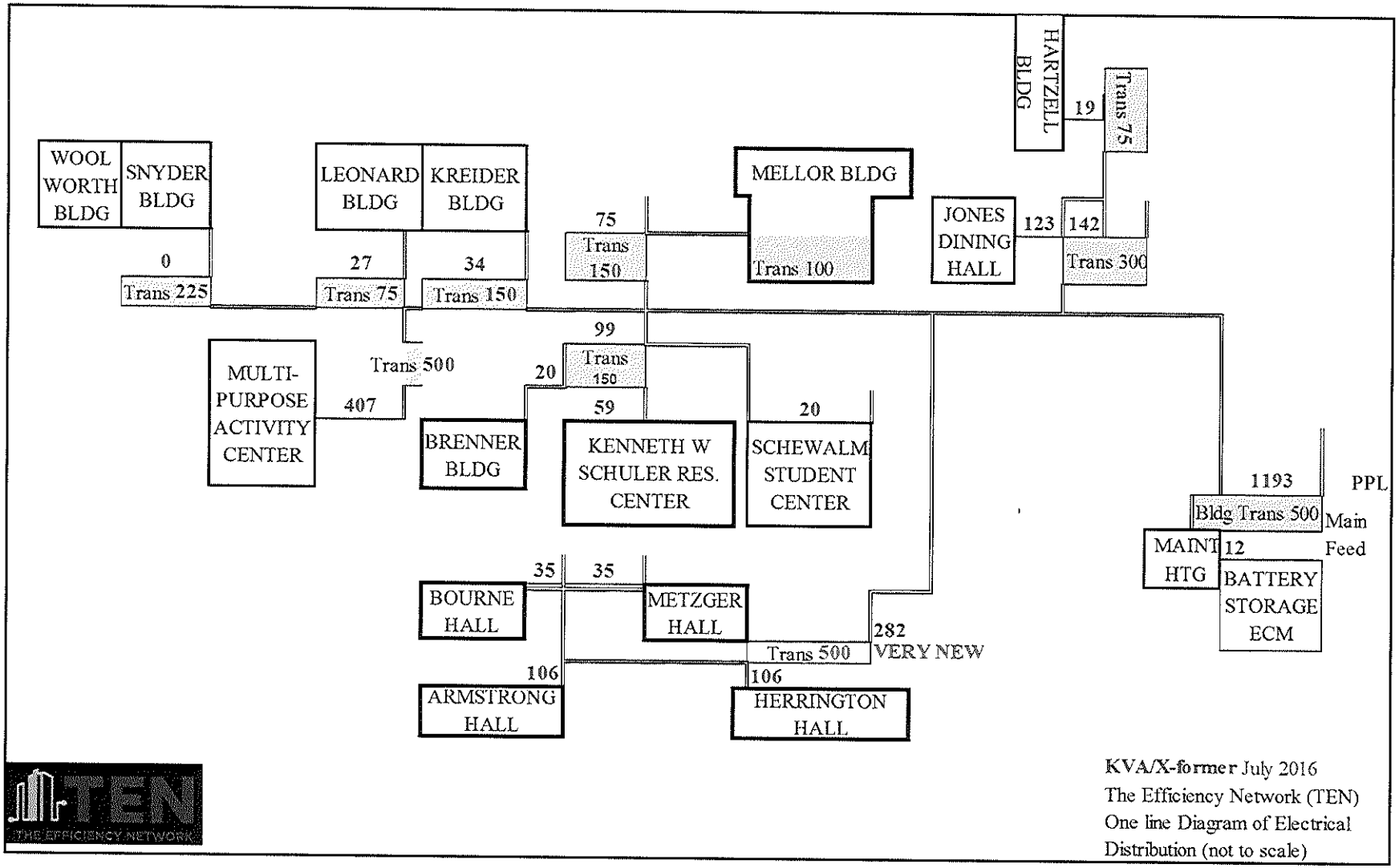

KVA/X-former July 2016
The Efficiency Network (TEN)
One line Diagram of Electrical Distribution (not to scale)

THE EFFICIENCY NETWORK

viridityenergy

www.ViridityEnergy.com

Thaddeus Stevens University Energy Overview

July 2016

Viridity Solutions

viridityenergy

Current Step

Economic Modeling

- Define strategy & financial targets
- Present preliminary economic analysis
- Coordinate with Thaddeus and TEN on areas of focus

Engineering Package

- Robust economic analysis
- Integration assessment & registration planning
- Contractual & deal support

Market Operations

- BESS Implementation
- Market registration, testing, operations
- Full settlements & ongoing reporting

Consulting Agreement (Fee Waived) → TEN IGA / Consulting Agreement → Implementation & Software Contract

© 2016 Viridity Energy Inc. Proprietary & Confidential

Additional Assumptions & Upside

viridityenergy

Assumption	Definition	Assumption	Value
PJM Frequency Regulation	PJM FR program to maintain grid frequency at 60 Hz	~8,300+ hours/year 95% Performance Score ~$42/MWh	~$300k/year per MW of batteries

Upside	Definition	Assumption	Value
ITC/MACRS	Ability to leverage storage or PV tax credit & accelerated depreciation	Up to 30% ITC and 5-7 year depreciation schedule	~$400k
UDM	Utility Demand Management Monthly Peak Shaving	Assuming the supply contract has a demand factor in it	$65k/year
Grant Funds	State or Federal Grants	Could add additional grants/funding	Various
Capacity/ PLC	PJM Capacity DR or PLC Management	5-15 hours per year	Potentially $50k/MW-yr

© 2016 Viridity Energy Inc. Proprietary & Confidential

Next Steps

viridityenergy

NTP & Consulting Agreement

Engineering Package Complete

System Shipment / Installation

Market Operations

Engineering Package

- Robust economic analysis
- Integration assessment & registration planning
- Contractual & deal support

Market Operations

- BESS Implementation
- Market registration, testing, operations
- Full settlements & ongoing reporting

TEN IGA / Consulting Agreement

Implementation & Software Contract

© 2016 Viridity Energy Inc. Proprietary & Confidential

PJM Grid Integration Options

Assessing Tradeoffs

viridityenergy

Viridity Navigates the Interconnection Processes for Clients / Developers

	Demand Response (DR)	Wholesale Market Participation Agreement (WMPA)	Small Generator Interconnection Agreement (SGIA)	Large Generator Interconnection Agreement (LGIA)
Interconnection Level:	None	Distribution System	Transmission System	Transmission System
Scaling:	Constrained by Load	Constrained by Distribution Limits	< 20 MW	> 20 MW
Approval Timeline:	1 Months	~ 2 Months	~ 6 Months with Options to Expedite	18 Month Minimum
Performance:	Discounted by Dynamic Loads	Largely Unconstrained	Largely Unconstrained	Largely Unconstrained

* BTM , "Behind the Meter" ... or on the load side of the electric distribution company (EDC) revenue meter

** IFM, "In Front the Meter" ... or a no load generation site ... or a load with net export plans modeled as generation

TEN
THE EFFICIENCY NETWORK

Viridity Energy Overview

viridityenergy

VIRIDITY ENERGY IS A LEADING ENERGY MANAGEMENT SOLUTIONS COMPANY WITH UNIQUE CREDENTIALS

- ✓ Founded in 2008; transformed from 2012 to 2015; moved now into growth mode
- ✓ Industry leader in demand response, energy management, energy conservation, and storage
- ✓ Key assets include patents, software platform, incumbent status, and network operating center
- ✓ Serves the organized markets of ERCOT (Texas), NYISO (NY), PJM, CAISO (California), ISO-NE (New England), IESO (Ontario) & Australia
- ✓ Introduced partner & license model in 2012, lead to expansion from <150 direct clients with <100MW under management, to over 1,000+ sites with over 650 MW under management
- ✓ Since 2012, averaging $60,000/MW-year gross market customer value
- ✓ **Largest non-utility storage portfolio in the northeast with over 50,000 operational market hours**

Wide Range of Customers & Partners

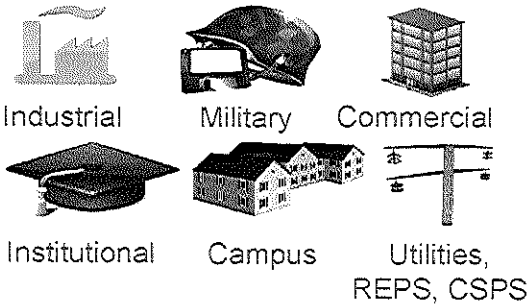

Market Leading Technology

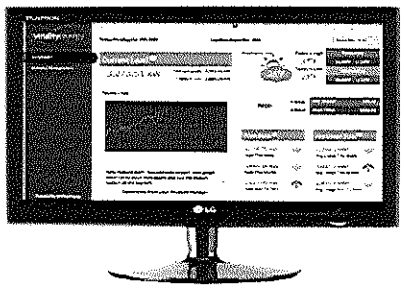

© 2016 Viridity Energy Inc. Proprietary & Confidential

Viridity Solution Ladder:

INTELLIGENCE + AUTOMATION + FLEXIBILITY

viridityenergy

High Touch

Low Touch

No Touch

- Frequency Regulation / Storage
- Synchronous Reserves
- Utility Demand Management (UDM)
- Economic Demand Response
- Emergency Demand Response
- VPower Dashboard
- Delayed Meter Solution and Reports (NEW)
- Coincident Peak (CP) Prediction / Peak Load Management
- Real Time Price Alerts (NEW)
- Forward Pricing solution (NEW)

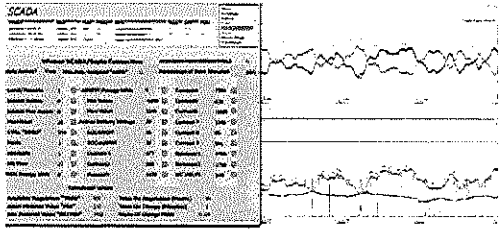

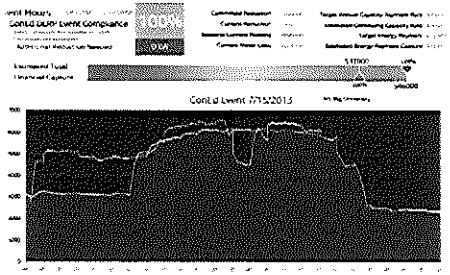

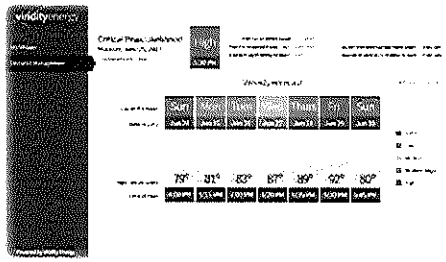

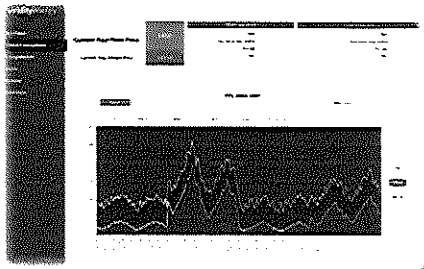

Core Capability | New / Upcoming Capability | Advanced Automation Capability

© 2015 Viridity Energy Inc. Proprietary & Confidential

ECM 4.3 - Sub-Meter Installation

Currently these is no sub-metering of energy at the individual buildings. The electricity and steam/natural gas for heating are metered at the Maintenance / Boiler Building. There are some sub-meters for a few small natural gas accounts.

The intent of this ECM is to provide Thaddeus Stevens sub-metering of each building available on site. Meters will be installed at each building to measure electricity and steam at the building level. This data will then be sent to a central location of trouble shooting or cost allocation. All metering points will be displayed back to the Metasys Single Seat User Interface outlined in ECM 2.1 above.

No energy savings are claimed for this ECM at this time. However sub-metering of the energy usage to individual buildings could lead to energy savings. During the IGA TEN will work with Thaddeus Stevens to determine energy savings that can be attributed to this ECM.

Additionally, TEN would like to install these sub meters as a first step and use the data to improve the end use analysis performed by TEN and to validate the distribution transformer sizing that has been estimated by TEN in ECM 4.2.
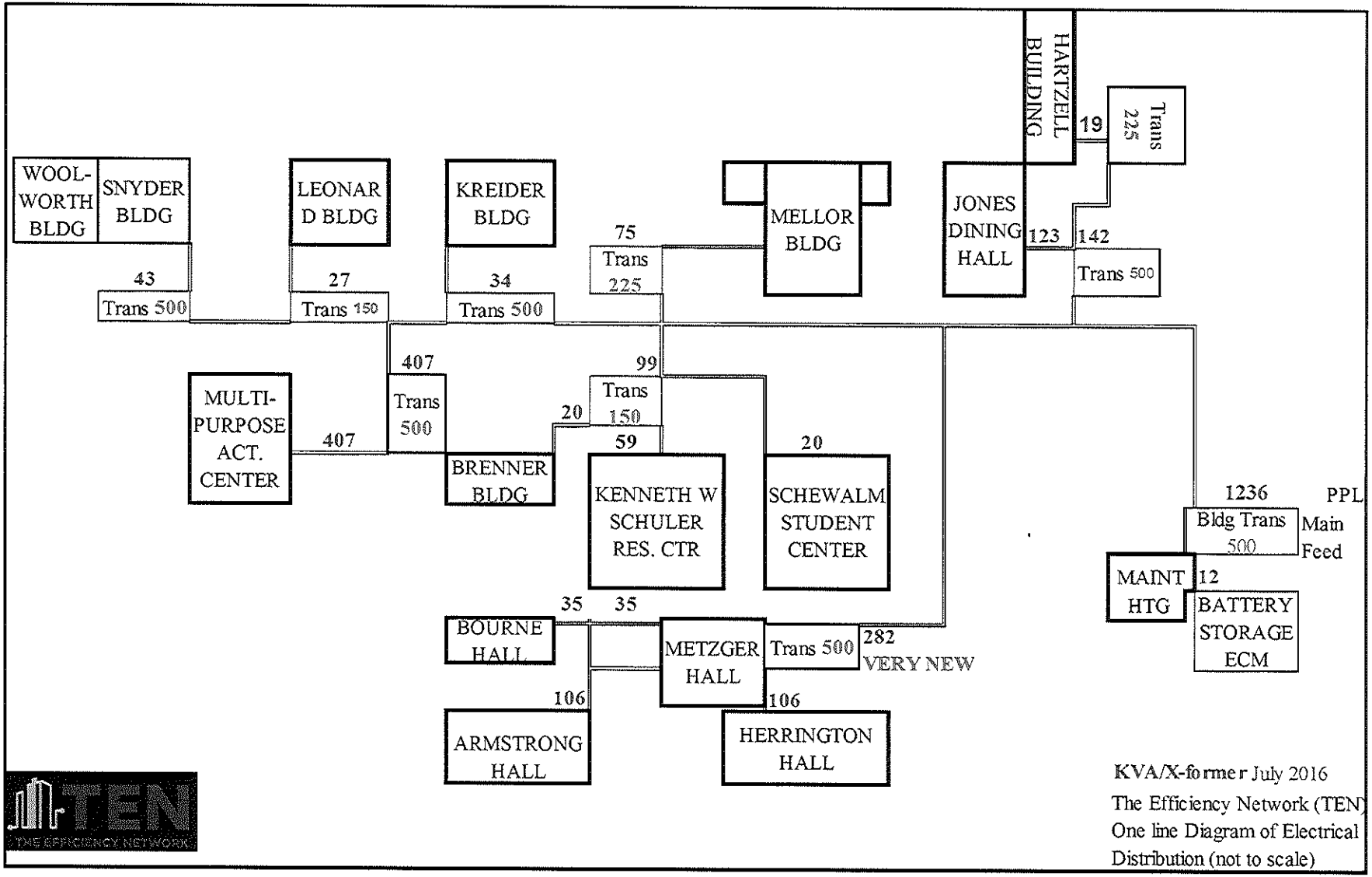
EXISTING TRANSFORMERS