VOLUME II - ECM/COST SUBMISSION

Response to Request for Quotes for a Guaranteed Energy Savings Project for the Commonwealth of Pennsylvania Department of General Services at

SCI Muncy

Project No. GESA 2017-2

Contract No. GESA 2017-2.1

©2018 Energy Systems Group, LLC

Lycoming County, PA
May 3, 2018

Tony Prelec, Account Executive
Phone: 724.996.7970
tprelec@energysystemsgroup.com

ESG ENERGY SYSTEMS GROUP

Pennsylvania Department of Corrections

Past Project Reference

"In my 30 years of working at SCI Dallas, I have been part of many projects, including energy savings projects.

I have worked with many different professionals and contractors here at the facility…the 2015/2016 Guaranteed Energy Savings Project implemented by Energy Systems Group at SCI Dallas has by far, been the best project I've been involved with.

All of the ESG people that I have worked with have been a pleasure dealing with. To this point this energy savings project has run faster and smoother than any other projects I have been a part of at SCI Dallas.

I am moving onto another phase in my life and it was a privilege to end my career working with the Energy Systems Group."

Michael Truchon, *Corrections Maintenance Manager 3 (retired)*

©2018 Energy Systems Group, LLC

Executive Summary

Energy Systems Group (ESG) is pleased to submit this proposal in response to the SCI Muncy Request for Quotes issued by PA DGS for a guaranteed energy savings agreement (GESA) project. **Energy Systems Group has brought together the same internal team of professionals who implemented the very successful, PA GESA for SCI Dallas to develop and implement the PA GESA for SCI Muncy.** That same internal team consisting of Account Executive, Project Manager, Corrections Specialist, and Engineers has worked on numerous Corrections projects and fully understands the uniqueness of a corrections environment and how to operate in a safe and secure manner.

The information in this proposal will show "why" Energy Systems Group is the leader in customer satisfaction and how we set ourselves apart from the competition. Our value is manifested in having the best expertise, financial strength, and long term dependability. But most importantly, our track record shows our commitment to forming long-term partnerships with our customers, helping them meet infrastructure and environmental goals and standing behind our workmanship 100%.

Since 1994, ESG has been implementing energy conservation projects and has been awarded over 475 contracts throughout the country with a total value in excess of $2.5 Billion dollars.

Our growth and expansion comes as a result of our dedication to project completion — not just with an "on-time and on-budget" mentality — but with a foundational business philosophy and a consistent objective of overachieving to provide exceptional value and results that translate into the highest level of customer satisfaction and deliver the greatest possible benefits to each of our Customers. Another important factor contributing to our success is the fact that ESG routinely matches our project team and their capabilities and experience with each specific type of project.

Energy Systems Group is very pleased that we were able to develop this 20 year, budget-neutral project which includes all the Base ECM's outlined in Appendix T, as well as some additional ECMs developed by ESG which added to the amount of overall energy savings available to fund the project.

©2018 Energy Systems Group, LLC

STATEMENTS REGARDING RFQ REQUIREMENTS

- Energy Systems Group (ESG) has received and acknowledged all six (6) bulletins released by PA DGS pertaining to the SCI Muncy RFQ.
- ESG has not included any cost information in the SCI Muncy Technical Submission
- ESG has not labeled any portion of our proposal as proprietary or confidential
- The total energy savings project in our ESG final scope of work will be at least 95% of the savings projected in the Quote, and the actual ECM costs shall be within 10% of the costs listed in the CEA/IGA, and the project will be self-funded from energy savings over the term of the project (maximum 20 years).
- Our sample RFQ Project schedule should not be construed as the final CPM schedule
- The Energy Consultants service fees are included in our project cash flow
- Measurement and Verification Services are included in the first three years of the project

Our team spent a considerable amount of time talking with SCI Muncy staff to fully understand the needs and desires most important to the staff, and the PA Department of Corrections, relative to this SCI Muncy GESA project. We feel our proposed GESA project addresses all the important issues brought to our attention by the SCI Muncy staff and hope that PA DGS and PA DOC will select Energy Systems Group as the ESCO of choice for this Corrections project.

Thank you for this opportunity to once again serve the Commonwealth of Pennsylvania, PA Department of Corrections and PA Department of General Services.

©2018 Energy Systems Group, LLC

TABLE OF CONTENTS
VOLUME II: ENERGY CONSERVATION MEASURES/COST SUBMITTAL

i. Original Bid Bond w/ Power of Attorney

Section 2-6 Energy Conservation Measures and Costs

	Description	Page #
a.	Investment Grade Audit	1 – 4
b.	Appendix T – ECMs Statement	4
c.	All Appendix T – ECMs included in Project	4 – 21
d.	Technical Feasibility Reasonableness	22
e.	Training for Staff	22 – 24
f.	Proposal Meets Commonwealths Needs	24
g.	Additional ECMs Developed by ESG	24
h.	Cost – ECM Cost Breakdown w/ Cashflow	25 – 26
i.	Statement About Energy Analysis	26
j.	Monitoring & Maintenance	27
k.	Measurement & Verification	27 – 29

<u>Electronic Copy (USB Flash Drive) Includes:</u>
Full Copy of ECM / Cost Submission
Appendix Items:

- Additional ECMs to be considered during IGA
- Energy Calculations including Line by Line
- Equipment Cut Sheets
- Infrared Images taken at SCI Muncy

©2018 Energy Systems Group, LLC

COMMONWEALTH OF PENNSYLVANIA
DEPARTMENT OF GENERAL SERVICES
GSBPSAS-147 (2009 Ed.)

Bond No. 43982-Liberty-18-06

CONSTRUCTION BID BOND
(Please Complete All Blanks)

KNOW ALL MEN BY PRESENTS, that we, Energy Systems Group, LLC (hereinafter called the "Principal") as Principal and Liberty Mutual Insurance Company a corporation duly organized under the laws of the State of Massachusetts (hereinafter called the "Surety") as Surety, are held and firmly bound unto The Department of General Services, Harrisburg, Pennsylvania (hereinafter called the "Obligee"), in the sum of Ten (10%) Percent of the ECM/Cost Submittal Amount for the payment of which sum, well and truly to be made, we, the said Principal, and the said Surety, bind ourselves, our heirs, our administrators, successors, and assigns, jointly and severally firmly by these presents.

Sealed with our seals and dated this 27th day of April A.D.

Two Thousand and Eighteen.

WHEREAS the Principal has submitted a bid upon Contract
No. GESA 2017-2.1
For A Guaranteed Energy Savings Project At: SCI Muncy, Lycoming County, PA

NOW, THEREFORE, the conditions of these obligations are such that if the Principal shall not withdraw its bid prior to the expiration of the award period after the opening of the bids; and shall comply with all requirements set forth in the "Quote" and the "Instructions to Bidders;" and if the said contract be awarded to the Principal and the Principal shall, within such time as may be specified, enter into the contract in writing, and give bond, with Surety acceptable to the Obligee, covering the faithful performance of the said contract and payment of claims for labor, material, and equipment rental, all of which shall be supplied on the forms as specified by said Obligee; or if the Principal shall fail to do so, pay to the Obligee the lesser of the following amounts: 1) the amount of this bond as herein above set forth, or 2) the difference between the amount specified in the Principal's bid and such larger amount for which the Obligee may in good faith contract with another party to perform the work covered by said bid, then this obligation shall be void; otherwise to remain in full force and effect.

WITNESS (OR ATTEST IF A CORPORATION)

(CORPORATE SEAL)

Marta Baker, Witness

PRINCIPAL
Energy Systems Group, LLC

Gregory F. Collins, President

SURETY
Liberty Mutual Insurance Company

Julie Denman, Attorney-in-Fact

DGS Project GESA 2017-2
SCI Muncy

This Power of Attorney limits the acts of those named herein, and they have no authority to bind the Company except in the manner and to the extent herein stated. Not valid for mortgage, note, loan, letter of credit, bank deposit, currency rate, interest rate or residual value guarantees. To confirm the validity of this Power of Attorney call 610-832-8240 between 9:00 am and 4:30 pm EST on any business day.

Liberty Mutual Insurance Company
The Ohio Casualty Insurance Company
West American Insurance Company

POWER OF ATTORNEY

KNOWN ALL PERSONS BY THESE PRESENTS: That The Ohio Casualty Insurance Company is a corporation duly organized under the laws of the State of New Hampshire, that Liberty Mutual Insurance Company is a corporation duly organized under the laws of the State of Massachusetts, and West American Insurance Company is a corporation duly organized under the laws of the State of Indiana (herein collectively called the "Companies"), pursuant to and by authority herein set forth, does hereby name, constitute and appoint, Julie Denman of the city of Grand Rapids, state of Michigan its true and lawful attorney-in-fact, with full power and authority hereby conferred to sign, execute and acknowledge the following surety bond:

Principal Name: Energy Systems Group, LLC

Obligee Name: The Department of General Services, Harrisburg, Pennsylvania

Surety Bond Number: 43982-Liberty-18-06

Project Description: A Guaranteed Energy Savings Project At: SCI Muncy, Lycoming County, PA, Project No. GESA 2017-2

IN WITNESS WHEREOF, this Power of Attorney has been subscribed by an authorized officer or official of the Companies and the corporate seals of the Companies have been affixed thereto this 27th day of February, 2017.

LIBERTY MUTUAL INSURANCE COMPANY INCORPORATED 1912 MASSACHUSETTS
THE OHIO CASUALTY INSURANCE COMPANY INCORPORATED 1919 NEW HAMPSHIRE
WEST AMERICAN INSURANCE COMPANY INCORPORATED 1991 INDIANA

The Ohio Casualty Insurance Company
Liberty Mutual Insurance Company
West American Insurance Company

By: David M. Carey, Assistant Secretary

STATE OF PENNSYLVANIA ss
COUNTY OF MONTGOMERY

On this 27th day of February, 2017, before me personally appeared David M. Carey, who acknowledged himself to be the Assistant Secretary of , Liberty Mutual Insurance Company, The Ohio Casualty Company, and West American Insurance Company, and that he, as such, being authorized so to do, execute the foregoing instrument for the purposes therein contained by signing on behalf of the corporations by himself as a duly authorized officer.

IN WITNESS WHEREOF, I have hereunto subscribed my name and affixed my notarial seal at King of Prussia, Pennsylvania, on the day and year first above written.

TERESA PASTELLA COMMONWEALTH OF PENNSYLVANIA NOTARY PUBLIC

COMMONWEALTH OF PENNSYLVANIA
Notarial Seal
Teresa Pastella, Notary Public
Upper Merion Twp., Montgomery County
My Commission Expires March 28, 2021
Member, Pennsylvania Association of Notaries

By: Teresa Pastella, Notary Public

This Power of Attorney is made and executed pursuant to and by authority of the following By-laws and Authorizations of, The Ohio Casualty Insurance Company, Liberty Mutual Insurance Company, and West American Insurance Company which resolutions are now in full force and effect reading as follows:

ARTICLE IV – OFFICERS – Section 12. Power of Attorney. Any officer or other official of the Corporation authorized for that purpose in writing by the Chairman or the President, and subject to such limitation as the Chairman or the President may prescribe, shall appoint such attorneys-in-fact, as may be necessary to act in behalf of the Corporation to make, execute, seal, acknowledge and deliver as surety any and all undertakings, bonds, recognizances and other surety obligations. Such attorneys-in-fact, subject to the limitations set forth in their respective powers of attorney, shall have full power to bind the Corporation by their signature and execution of any such instruments and to attach thereto the seal of the Corporation. When so executed, such instruments shall be as binding as if signed by the President and attested to by the Secretary. Any power or authority granted to any representative or attorney-in-fact under the provisions of this article may be revoked at any time by the Board, the Chairman, the President or by the officer or officers granting such power or authority.

ARTICLE XIII – Execution of Contracts – SECTION 5. Surety Bonds and Undertakings. Any officer of the Company authorized for that purpose in writing by the chairman or the president, and subject to such limitations as the chairman or the president may prescribe, shall appoint such attorneys-in-fact, as may be necessary to act in behalf of the Company to make, execute, seal, acknowledge and deliver as surety any and all undertakings, bonds, recognizances and other surety obligations. Such attorneys-in-fact subject to the limitations set forth in their respective powers of attorney, shall have full power to bind the Company by their signature and execution of any such instruments and to attach thereto the seal of the Company. When so executed such instruments shall be as binding as if signed by the president and attested by the secretary.

Certificate of Designation – The President of the Company, acting pursuant to the Bylaws of the Company, authorizes David M. Carey, Assistant Secretary to appoint such attorneys-in-fact as may be necessary to act on behalf of the Company to make, execute, seal, acknowledge and deliver as surety any and all undertakings, bonds, recognizances and other surety obligations.

Authorization – By unanimous consent of the Company's Board of Directors, the Company consents that facsimile or mechanically reproduced signature of any assistant secretary of the Company, wherever appearing upon a certified copy of any power of attorney issued by the Company in connection with surety bonds, shall be valid and binding upon the Company with the same force and effect as though manually affixed.

I, Renee C. Llewellyn, the undersigned, Assistant Secretary, of The Ohio Casualty Insurance Company, Liberty Mutual Insurance Company, and West American Insurance Company do hereby certify that the original power of attorney of which the foregoing is a full, true and correct copy of the Power of Attorney executed by said Companies, is in full force and effect and has not been revoked.

IN TESTIMONY WHEREOF, I have hereunto set my hand and affixed the seals of said Companies this 27th day of April, 2018.

LIBERTY MUTUAL INSURANCE COMPANY INCORPORATED 1912 MASSACHUSETTS
THE OHIO CASUALTY INSURANCE COMPANY INCORPORATED 1919 NEW HAMPSHIRE
WEST AMERICAN INSURANCE COMPANY INCORPORATED 1991 INDIANA

By: Renee C. Llewellyn, Assistant Secretary

State of MI
County of Kent } ss:

On April 27, 2018, before me, a Notary Public in and for said County and State, residing therein, duly commissioned and sworn, personally appeared

Julie Denman

known to me to be Attorney-in-Fact of Liberty Mutual Insurance Company
the corporation described in and that executed the within and foregoing instrument, and known to me to be the person who executed the said instrument in behalf of the said corporation, and he duly acknowledged to me that such corporation executed the same.

IN WITNESS WHEREOF, I have hereunto set my hand and affixed my official seal, the day and year stated in this certificate above.

My Commission Expires 7/6/2024

Marta Baker Notary Public

2.6.D.1 Energy Conservation Measures and Cost Submission

INVESTMENT GRADE AUDIT

a. Scope of the Investment Grade Audit (IGA) including systems covered, personnel, methodology and milestones

ESG's IGA will compile results from the facility audits, comprehensive cost savings analysis and will carefully evaluate the most cost effective measures in conjunction with any specific facility needs and/or goals to be included in the final list of recommended Energy Conservation Measures (ECMs). In the final proposal ESG will also include, ECMs that were excluded so that DGS, SCI Muncy and CJL Engineering will understand and have access to all evaluated measures.

ESG's project development approach includes preliminary site visits to evaluate baseline equipment operation and condition. Following the preliminary surveys, a list of deficiencies or upgrades are identified and a measurement plan, devised. Short-term measurements in combination with drawings, manufacturer's data, feedback from building personnel and ESG experience, are utilized to develop baseline energy budgeting for various building systems. The baseline energy budgeting is a critical step to establishing boundaries for realizable energy savings through various ECMs. The total building energy use is then compared to the aggregate energy budget number to further validate the baseline values.

ESG's baseline and energy-savings calculation methodologies are based on standard engineering principles from ASHRAE or AEE or approved Building Simulation software. The spreadsheet calculations are based on hourly calculations (hourly BIN data), with the weather data based on TMY-2[1] or TMY-3[1] information. When warranted, we employ computer models, such as eQUEST, to calculate the energy savings.

ESG engineers and project managers have years of field experience in identifying, analyzing, quantifying and implementing ECMs. From the most common ECMs such as lighting, to the more complex and innovative measures such as mechanical-system-performance optimization, ESG has successfully developed, installed and achieved the performance. ESG offers expertise in the development of quality ECMs, including accurate financial analysis to determine the best package of ECMs.

Overview: ESG has the required expertise in the all aspects of developing, designing, installing, maintaining and verifying a Guaranteed Energy Savings Agreement (GESA) project. Over the years, we have sought out and retained professionals that possess the specific skillsets to be a highly capable GESA provider. The ESG Northeast Region team has more than a two hundred years' worth of combined experience in GESA contracting. These professionals have expertise in:

- Identifying energy conservation measures
- Preparing detailed engineering feasibility studies
- Developing preliminary plans and specifications
- Investigating
  - Existing HVAC systems
  - Central and unitary hot-water and steam heating systems, including distribution systems
  - Fuel switching opportunities
  - Operations and utility costs
  - Load calculations
  - Current system operation practices

[1] *TMY is Typical Meteorological Year; TMY 2 and TMY 3 are Typical Meteorological Year data from 1961-1990 and from 1990 on, respectively.*

©2018 Energy Systems Group, LLC

  - Maintenance practices and costs
  - Life-cycle cost analysis and
  - Renewables including solar, geothermal and co-generation
- Maximizing energy and cost savings to provide a program that is fully funded with energy savings
- Performing building simulation to establish accurate baseline and savings estimates
- Providing definitive cost and savings estimates for the proposed ECMs, and,
- Guaranteeing the performance of the ECMs

Detailed Energy Engineering Feasibility Study/Audit: ESG will request a building inventory list, obtain utility cost information, drawings, specifications, Asbestos Hazard Emergency Response Act (AHERA) reports, other documents and reports as applicable, and discuss the building operation and potential projects with site personnel. This study will include analyzing the applicable utility bills and rate schedules and determining the appropriate incremental utility costs for the savings analyses.

ESG will assemble the best team for the project from ESG staff, sub-consultants and subcontractors. *Key ESG personnel that will have varied roles in the audit phase are: Dan Khuu, Jerry Elmblad, Tony Prelec, Mahesh Bala, John Songer, Michael Lowery, Stephen Richmond, and Scott Gracely.* The subcontractors ultimately selected to assist with the facility audits and analysis will depend on the project size, energy systems involved, and any preferences identified by PA DGS, SCI Muncy, and CJL Engineering, *while maximizing Small Diverse Business (SDB) participation.*

Sequence of Events for SCI Muncy IGA: ESG will schedule a kick-off meeting, and conduct an on-site planning session with both site staff and DGS personnel to obtain input on projects, building drawings, maintenance costs, site access rules and logistics, etc. ESG will schedule and perform a detailed site survey of the energy systems of each facility and the overall site. ESG will focus attention on areas of specific concern to SCI Muncy, such as the measures listed in Appendix T of the RFQ, and other measures that ESG will look to uncover through our investigation.

An overview of the process and information obtained through the surveys and subsequent analysis follows:

1. General information on each building included in the program:

- Square footage
- Number of floors
- Window size and type; U-Values
- Exterior walls and roof construction; U-Values
- Hours of occupancy and number of occupants
- Basic building mechanical, electrical, and plumbing equipment information
- Building As-Built or record drawings for use to gather information
- 12 to 24 months of consecutive utility data for each site included for all utilities, including electric, natural gas, fuel oil, water/sewer, etc.

2. The site surveys will include input from building operating personnel and occupants to determine methods of energy systems operations, temperature setpoints, problem areas, deferred maintenance items, equipment condition, etc. The site surveys will include a detailed inspection of energy system equipment, nameplate data, existing control systems and trending if possible, measurements, non-destructive testing, noting the condition and age of all equipment and controls, listing potential operation and maintenance (O&M) improvements, and itemizing ECMs to be analyzed.

©2018 Energy Systems Group, LLC

3. The operating characteristics of each air handling system will be examined as follows:

- Supply, return, and outside air quantities, rated static pressure
- Air temperatures (supply, return, mixed, hot deck, cold deck, etc.)
- Motor electrical characteristics (volts, amps, measured kW load) – all motors
- Hours of operation – by ESG installation of data-loggers
- The sequence of operations and method of control

4. The operation of the heating system will be evaluated as follows:

- Review logs and water treatment records for boilers
- Record nameplate data and measure volts, amps, kW, ΔT, hours, Δp and flow rate of heating equipment
- Discuss seasonal loading of boilers with plant staff and measure actual load and pressures to determine seasonal loading including secondary and tertiary systems.

5. The operating characteristics of domestic water heating systems will be evaluated:

- Identify temperature settings either at the unit or from measuring temperatures at the outlet
- Discuss opportunities for night/weekend setback and demand control of electric units

6. HVAC temperature controls will be inspected as follows:

- Identify the type of controls used (electric, pneumatic, electronic)
- Obtain a sequence of operation and verify, if possible
- Evaluate condition of controls systems and components
- Evaluate calibration of pneumatic controls, moisture carryover, and compressed air leakage
- Evaluate the potential for energy and maintenance savings from DDC controls upgrade

7. Lighting systems will be surveyed as follows:

- Perform room by room fixture counts, sample light level measurements, and appropriate upgrade recommendations
- Open selected fixtures to obtain ballast data (PCBs, efficiency data)
- Identify O&M items (such as cracked lenses, dirty fixtures, etc.)
- Determine hours of use and occupancy from the installation of data loggers at sample locations
- Evaluate the potential for savings through daylighting, occupancy sensors, and other ECMs
- Perform mockup to help SCI Muncy and DGS select the best performing and high value lighting approach

8. Other significant energy using systems, as applicable:

- These could include equipment part of the heating/cooling distribution systems, steam traps, emergency generators, kitchens, etc.

9. Water/Sewer Systems will be examined as follows:

- Count toilets, urinals, sinks, showers, cooling tower makeup, and other water-using systems
- Determine condition, flow rate, and applicability of automatic controls
- Identify other water consuming systems, such as irrigation, laundry, etc.
- Obtain data on occupancy, estimate current usage, and savings from new fixtures and controls

©2018 Energy Systems Group, LLC

10. Identification and quantification of deferred maintenance items that qualify as energy cost reduction measures

The project team compiles and analyzes data from the site surveys and evaluates ECM opportunities through a methodical process. The survey engineers prepare preliminary ECM recommendations, which are reviewed internally and then with SCI Muncy DOC and DGS, used to identify the upgrades that bring the best value to the project. The team then begins the process of choosing the appropriate ECMs for recommendation to the SCI Muncy, DOC and DGS based on economic criteria. This step includes the in-depth validation of savings and detailed pricing for the scope developed as discussed in the previous sections.

After all the detailed analysis is completed concerning the ECMs to be included in the final project a cash flow is developed to ensure the project fits within the financing criteria established by DGS. A final Investment Grade Audit report is then generated and provided to PA DGS.

ENERGY CONSERVATION MEASURES

b. Proposed ECMs in the RFQ. If there is a reason a proposed ECM listed in the Appendix "T" to this RFQ by the Commonwealth is not included in the scope of the Quote, the Offeror must provide a detailed explanation as to why the ECM was excluded from the scope.

All "Appendix T" base Energy Conservation Measures (ECMs) are included in our ESG developed proposal and project cash flow. In addition our proposed project includes some ESG developed ECMs as well.

c. Preliminary listing of ECMs included in the project

Base Energy Conservation Measures (from Appendix T)

EM #1 - Upgrade Interior and Exterior Lighting to LED

Concept:

Appendix T of the RFQ includes a measure for facility lighting fixture (interior and exterior building mounted, and site lighting) conversion to LED. This measure will address these fixtures.

The interior and exterior lighting equipment should be upgraded to LED technology to reduce energy and maintainence costs. Lighting controls for occupancy and daylight harvesting will also reduce energy costs.

The basic concept used in our design is to provide the best value by balancing the following considerations:

- Products have been selected based on the application, past corrections experience and ACA standards to ensure that we provide appropriate light levels and optimal light distribution
- We selected technology using quaility products from reputable manufacturers
- All solutions were engineered to provide cost effective long term energy savings to the project
- The long term maintenance required will be signifigantly reduced

©2018 Energy Systems Group, LLC

As with all correctional facilities, the safety and security of the facility are paramount and can never be compromised. The exterior lighting systems will be evaluated and recommendations given that will not only save on energy costs, but will also generate operational savings with the final outcome increasing the safety and security of the facility by achieving appropriate light levels. ESG does not manufacture nor promote specific lighting manufacturers, therefore, we are a completely vendor neutral concerning all products and equipment used on our projects. This allows ESG to complete Investment Grade Audits and provide recommendations utilizing only the equipment that best suites the facility. Exterior lighting is one prime example. ESG takes all exterior lighting systems and designs a holistic approach. Perimeter, wall pack, high mast, and walkway lighting systems are evaluated and recommendations given that may utilize many different types of newer technologies or manufacturers to achieve the Department of Corrections overall exterior lighting goals. Better exterior light quality will enable the officers and staff to monitor inmate movement, locate contraband, see illicit activities, be able to recognize facial features better for positive identification of both staff and inmates, and will help out with camera systems as well. With better light quality, inmates are also less likely to attempt to break rules or regulations. ESG's full time correctional staff will work with SCI Muncy to help ensure that the DGS and DOC will obtain the correct lighting systems for the facility. ESG will work directly with SCI Muncy to evaluate each fixture independently to ensure the facility receives what is right for that location. ESG's staff has worked extensively in correctional facilities, utilizing many different lighting systems. Our knowledge and experience working with LED, Plasma, or other lighting technologies will afford the DOC with an opportunity to ensure that the facilities receive solutions that are comprehensive, complete and optimal.

Existing:
The SCI Muncy campus has a mix of lighting technologies including T12, T8, and T5 fluorescent fixtures and CFL lamps for interior illumination. The exterior fixtures include metal halide, high-pressure sodium, and some recently installed LED units.

The overwhelming majority of interior fixtures are linear fluorescent. The majority of the interior lighting has been converted to low wattage (28W) T8 lamps and high efficiency, normal-power electronic ballasts, but some old T12 lamps and magnetic ballasts still exist. There is a wide variety of fixtures including recessed troffers, wraps and tamper proof fixtures in the dorms. Most of the dormitory fixtures also have an internal compact fluorescent night light. Almost all buildings have drum fixtures that have either two circle fluorescent or two incandescent lamps. Most of the fixture housings are in good shape.

The electrical maintenance staff have been updating their replacement procedure with better, more efficient products as they become available. They have started to install Type A LED tubes in small quantities throughout the campus. This upgrade simply replaces the existing fluorescent lamps with LED lamps that run off of the existing fluorescent ballast. While this is simple and inexpensive, there are some challenges. These challenges include compatibility, keeping an additional point of failure, and additional enegy use. The LED lamps being used may not be compatible with all of the existing fluorescent ballasts, so ballasts may have to be replaced during a lamp replacement. The existing ballast is still a point of failure and will need to be replaced as failures occur.

The exterior system consists mostly of metal halide and high-pressure sodium floods, area lights and wall packs. The perimeter lighting has been replaced with new LED fixtures.

Recommendations
ESG is proposing to upgrade all the existing lighting systems to LED using a mix of retrofits and fixture replacements. The scope will follow Appendix T and other design criteria as referenced in the RFQ. Lamps will have a color temperaure of 3000 K and a CRI of at least 80.

©2018 Energy Systems Group, LLC

We are proposing to retrofit most of the the existing fluorescent fixtures with UL Type B LED lamps. The sockets will be replaced with un-shunted sockets and direct wired to line voltage. This solution eliminates the ballast as an energy consumer and a point of failure. This is the same type of lamp succesfully implemented at SCI Dallas.

While we recommend retrofitting fixtures in most areas, some fixtures will be replaced with new LED fixtures. In certain cases LED fixtures can provide more than twice the life of LED lamps. This increased lifespan will reduce maintenance costs for fixtures that are more difficult to access due to their height.

Fixtures with screw-in lamps will be replaced with LED screw-ins and fixtures with pin-based sockets will be converted to LED using a retrofit kit. Care will be taken to ensure the screw-in replacements are suitable for the fixture type.

Floods, wall packs and area fixtures will be replaced with the same type of LED fixture with a color temperture of 5000 K.

The American Correctional Association has recommendations for minimum lighting requirements for specific areas throughout a prison complex. ESG's correctional staff will work directly with SCI Muncy and subcontractors to ensure these standards are maintained.

Assumptions:
Operating hours used for energy saving calculations were noted during the survey from SCI Muncy personnel.

EM #2 - Install Interior Lighting Controls

Concept:
Appendix T of the RFQ includes a measure for lighting sensors, including occupancy and daylight harvesting technologies. This measure will be addressed in non-inmate buildings.

The interior lighting equipment will be upgraded to LED technology to reduce energy and maintainence costs. Lighting controls for occupancy and daylight harvesting will also reduce energy costs.

Existing:
The SCI Muncy campus has a mix of technologies including T12, T8, and T5 fluorescent fixtures and CFL lamps for interior illumination. These fixtures are currently controlled by standard wall switches.

Recommendations
As discussed for the previous ECM, ESG is proposing to upgrade all the existing lighting system to LED using a mix of retrofits and fixture replacements. Local occupancy and daylight harvesting controls are included in non-inmate buidlings. All controls will be reviewed further for technical and financial feasibility during the IGA phase of the project.

The occupancy controls will turn off the lighting in an area when it is unoccupied. Daylight harvesting will reduce or turn off lighting fixtures when the ambient daylighting is sufficient in the space.

Assumptions:
Operating hours used for energy saving calculations were noted during the survey from SCI Muncy personnel.

©2018 Energy Systems Group, LLC

EM #3 – Install Solar Photovoltaic (PV)

Concept:
Appendix T of the RFQ includes a measure for solar panel field. This measure will include 500 kW of ground mounted solar panels connect to the existing utility entrance at the Main Switch House.

Photovoltaic (PV) panels were considered to generate onsite usable electric energy. Since the sun is a source of clean, renewable energy, the PV system will generate zero-emission electricity at virtually no ongoing cost. Using solar energy to generate clean, renewable electricity will displace current electric utility consumption and cost.

The amount of sunlight reaching the surface of the earth every hour contains enough energy to meet the world's energy demand for an entire year. As a global leader in energy efficiency and sustainability, Energy Systems Group wants to help you harness the sun's energy to help you meet your energy needs using this most renewable of resources. We can take responsibility for everything, from design and engineering, to operations and maintenance of the system. Additionally, we'll help you improve the financial return from your solar installation by leveraging federal, state and local grants, rebates, incentives and renewable energy certificates that may be available.

A thorough analysis of the potential for added solar for SCI Muncy was performed and the results are shown below.

Existing Conditions:
There are currently no PV systems installed at SCI Muncy. The site has minimal obstructions and is a good application for a Solar PV installed.

Recommendations:
ESG recommends the installation of ground mounted Solar PV arrays to offset the purchase of power Initial PV array sizing is shown in the table below for ground mounted systems.

ESG proposes to fully design, permit, install, and commission a 500,000-Watt ground mounted solar photovoltaic (PV) system. ESG will provide electrical and structural engineering drawings of the project as well as manage the entire construction process. ESG will coordinate with the local utility and municipality to receive the necessary inspections and documentation to commission the system and interconnect the project to the utility grid.

Site	PV Size - (DC Watts)
SCI Muncy	500 kW

©2018 Energy Systems Group, LLC

It is expected that after the other recommended ECMs are installed as part of the GESA project the proposed PV arrays will partially offset the annual kwh demand of the facility. Due to the budget-neutral requirement of the RFQ ESG is not able to install a system that will handle the full electrical load at SCI Muncy, however, we can investigate that option during the IGA.

Assumptions:

- The select ground mounted system is shown at the entrance of the facility. Other more desirable locations may be considered depending on future plans the DOC may have for the facility,
- The size of the system, layout, and location of the array is flexible based on SCI Muncy preferences
- The successful completion of a utility interconnect agreement
- Available capacity of the substation for PV system connection
- Acceptance of design by local code enforcement
- Cost of monitoring for 5-years is included
- Fencing around the array is included

FM/TBS #1 – Steam Trap Replacement

Concept:
Appendix T of the RFQ includes a measure for campus wide steam trap repair and replacement. This measure addresses all the steam traps on the campus.

Steam traps are automatic valves used in steam systems to remove condensate, air, and other non-condensable gases while preventing or minimizing the passing of steam. If condensate is allowed to collect, it reduces the flow capacity of steam lines and the thermal capacity of heat transfer equipment. Additionally, excess condensate can lead to "water hammer," in the piping system with potentially destructive and dangerous results. Air that remains after system startup reduces steam pressure and temperature and may also reduce the thermal capacity of heat transfer equipment. Non-condensable gases, such as oxygen and carbon dioxide, cause corrosion. Steam that passes through the trap provides no heating value. This effectively reduces the heating capacity of the steam system or increases the amount of steam that must be generated to meet the heating demand. When condensate is returned to the boiler, steam bypassing a trap may not condense prior to arriving at the deaerator, where it may be vented along with the non-condensable gases. Mechanical traps are prone to failure as they age, resulting in large steam losses and requiring substantial maintenance. Steam traps separate the steam system from the condensate system.

Traditional steam traps can fail in the open or closed position. When a steam trap fails in the open or leaking-by position, some or all of the energy that was added at the boiler is lost into the condensate return system. The energy contained in steam is only utilized when it condenses in a heat exchanger (radiator, convector, hot water heater, AHU coil, etc.) and releases its latent heat to the process. It is at this point the steam trap should allow this condensate into the condensate return system to return to the boiler.

As mentioned above, a leaking trap still allows steam to flow through the heat exchange device it serves and will typically not affect its heating capacity. Conversely, a steam trap that fails in the closed position does not allow the condensate to enter the condensate return system. As a result, condensate backs up into the heat exchange device it serves, thereby first reducing, then eliminating, its heating capacity. Plugged traps are often identified through "cold calls" and repaired. Replacing or repairing failed traps will improve the efficiency of the steam distribution system and save energy, and reduce operational and maintenance costs.

©2018 Energy Systems Group, LLC

Existing Conditions:

The following table shows an estimated number of steam traps at SCI Muncy, based on observations made during the preliminary site survey. No trap testing was performed. During the IGA, ESG will perform a full, detailed survey of the existing trap inventory, identify failed steam traps and provide a replacement.

Site	F&T	Inverted Bucket	Thermodynamic	Thermostatic
SCI Muncy	102	44	33	870

Recommendations:

All mechanical traps (179 total) will be replaced with new traps manufactured by Tunstall. All thermostatic traps (870 total) will be retrofit with new insert and cap manufactured by Tunstall. In the event the existing trap will not accept a retrofit kit and new cap, the trap will be replaced with a new steam trap as manufactured by Tunstall.

Assumptions:

- The size and quantity of many traps, and trap applications, are estimated based on the preliminary survey: not all buildings were audited
- Steam pressures are assumed
- Steam system on/off times are estimated based on temperature bin analysis for Williamsport PA and the information on the facility's heating systems provided in the GESA RFQ and by SCI Muncy staff
- Annual hours of operation is assumed to be:
  - 1,095 for traps on kitchen equipment
  - 1,390 for traps on heating units and heat exchangers
  - 2,190 for traps on domestic hot water heaters
  - 4,633 for traps on heating distribution drip legs; 8,760 for traps on main distribution drip legs
  - For this preliminary analysis, failure rates are assumed as 5% plugged (failed closed), 5% blowing (failed open), and 10% leaking (average trap maintenance program)

FM/TBS # 2 - Replace Window Air Conditioners with a Variable Refrigerant Flow System for the Administration Building

Concept:
Appendix T of the RFQ includes a measure to replace the window air conditioning units with split, variable refrigerant flow air conditioning systems for the Dietary, Administration, and Education Buildings. This proposed measure will only address the replacement of the units in the Administration Building. Due to excessively long paybacks, the Dietary and Education Building conversions are not included in the cash flow, but inclusion of the additional buildings can be investigated during the Investment Grade Audit (IGA).

Variable Refrigerant Flow (VRF) systems can replace inefficient and poorly controlled ductless air-conditioning units that are typically added to offices that did not originally have air-conditioning incorporated in the building design. VRF systems are more efficient and allow for multiple zoning.

Existing:
There are 30 ductless window air conditioning units located throughout the Administration Building serving offices. They are mounted in the operable windows and powered by wall electrical outlets.

©2018 Energy Systems Group, LLC

The units included are:

- Front: Qty. (10) 15,000 BTU wall cassette units
- Left: Qty. (9) 15,000 BTU wall cassette units
- Right: Qty. (11) 15,000 BTU wall cassette units

Recommendations

The window air conditioning units will be replaced by a Variable Refrigerant Flow System with 36 tons of cooling capacity. ESG will provide labor, materials, tools, and supervision to perform the following:

- Remove existing 30 window mounted units
- Recover refrigerant from units
- Disconnect and remove existing electric service

Provide and install the following

- Refrigerant piping
- Condensate piping
- Branch selector boxes
- 5 Year compressor warranty
- 1 Year manufactures warranty
- Outdoor unit #1, model YVAHP144B32S, modular 12 ton VRF
- Ten indoor units, model YIFE015B21S, 1.3 Ton floor exposed
- Outdoor unit #2, model YVAHP144B32S, modular 12 ton VRF
- Nine indoor units, model YIFE015B21S, 1.3 Ton floor exposed
- Outdoor unit #3, model YVAHP144B32S, modular 12 ton VRF
- Eleven indoor units, model YIFE015B21S, 1.3 Ton floor exposed
- Level 1 CC - (H-Link II System 1) CBN02 BACnet Adapter
- Level 2 CC - (H-Link II System 1) CCL01 Large Central Controller

Assumptions:

- Existing Number of Window A/C Units is 30
- Average Capacity, per Window A/C Unit 1.25 tons
- Existing Window A/C Efficiency is 1.40 kW/Ton
- Cooling Utilization Factor is 40%
- Operating Hours (Williamsport BIN Data, 6AM to 6PM, 5 Days/Wk) is 3,084 Hrs/yr
- Proposed VRF Cooling Efficiency is 1.13 kW/Ton
- All work is to be performed during normal working hours, unless otherwise indicated
- A warranty on the equipment installed is being provided only to the extent of the equipment manufacturer's warranty.

FM/TBS # 3 – Add Exhaust Hood Controls

Concept:

Appendix T of the RFQ includes a measure to add exhaust hood controls for the Kitchen. This measure will address the installation of energy saving hood controls.

©2018 Energy Systems Group, LLC

The kitchen hood fans currently operate during nonfood preparation periods. The general practice is to turn on the kitchen hood at the start of the day, and let it operate until late evening. During idle, non-cooking periods, this practice results in a very large amount of wasted energy. Not only is exhaust and make-up air fan energy wasted, but more importantly conditioned air is exhausted. A Kitchen Hood Control system is a variable-speed control strategy that reduces fan speed or shuts the system down during idle non-cooking periods by use of temperature and optic sensors that detect the heat and smoke load inside the hood and varies the speed of the exhaust and make-up fans.

Existing Conditions:
The kitchen hood located in the main Kitchen has no automatic controls to limit or reduce the speed of the fans in the existing kitchen hood. The kitchen hood was operating during our resent site visits even though no cooking was taking place.

Recommendations:
It is recommended that kitchen hood controllers be installed for the kitchen. This would control the operation of the kitchen hood fans as per the operation of the cooking equipment being served by them.

Installation Includes:

- Turn-key installation
- Variable frequency drives (VFDs)
- System controller
- Sensors for the hood (both optic and temperature)
- Low voltage cabling
- System commissioning
- Owner's training
- Includes ABB Bypass VFD for Exhaust fan (ACH-550 series) or equal
- Includes ABB Standard VFD for MUA Unit (ACH-550 series) or equal
- Includes wireless device for monitoring
- Motor replacements are included

Assumptions:

(1) A load factor of 75% has been assumed in the existing condition.
(2) A load factor of 75% has been assumed in proposed condition.
(3) A cycling factor (% on time) of 100% has been assumed in the existing condition.
(4) Motor efficiency values have been obtained from Motor Master International program.
(5) A typical flow profile for a kitchen hood has been used to arrive at the VFD savings.
(6) A heating system efficiency of 70-80% is assumed

©2018 Energy Systems Group, LLC

FM/TBS # 4 – Replace Refrigeration Equipment Condenser to High Efficiency, Non-HCFC Unit at the Dietary Facility -

Concept:
Appendix T of the RFQ includes a measure to replace the existing refrigeration equipment compressor to a high-efficiency, non- HCFC unit. This measure will address the replacement of the R-22 unit.

The Dunham Bush water cooled condenser for the walk-in cooler uses R-22 refrigerant. Replacement with a new high-efficiency, non-HCFC unit using HFC-404 will eliminate this liability and increase the reliability with a new system.

Existing:
The walk-in box uses a Dunham Bush Model 20HF water cooled condenser mounted in the basement. The system uses R-22 refrigerant. It is piped to DX evaporator unit located inside the walk-in box. The compressor shows signs of excessive wear.

Recommendations:
- Remove and dispose of the existing evaporators and R-22 compressors.
- Install new Copeland water cooled compressor and Trenton evaporators with SmartSpeed.
- New refrigerant to be R-404A.
- New refrigerant piping, drain lines, refrigerant specialties, and insulation

Assumptions:
- The refrigerant piping is accessible for replacing from the basement up to walk-in cooler.
- The power available is 460 volt, three phase.
- The system can be shut-down for the replacement with a back-up, temporary unit.

FM/TBS # 5 – Convert Housing 'Unit B' From All Electric to Natural Gas for Heating and Domestic Hot Water

Concept:
Appendix T of the RFQ includes a measure to convert Housing Unit B to either natural gas or steam heating and domestic hot water. This measure will address this conversion from all electric to gas heat and domestic hot water in Unit B.

Currently Unit B is electrically heated. The heating, cooling, and domestic hot water for the dormitory are electric with no steam connection to the facility. The concept is to convert the facility to natural gas heating and domestic hot water by running a new buried natural gas line from the Boiler Plant natural gas meter over to Unit B. Install a new natural gas fired domestic hot water heater and reuse the existing 500-gallon electric water heater for storage and backup. Install new natural gas fired packaged rooftop heating and cooling units to replace the existing units. New controls included in the Energy Management System measure.

The conversion from electric heating to the natural gas units will substantially reduce energy costs. Replacement of the existing rooftop units with package natural gas units is less expensive than the use of steam heating and upgrades to the heating and cooling systems. In this design there will be two fuel sources for the domestic hot water to increase reliability and redundancy. The design also minimizes the downtime during installation of the new natural gas heating, hot water, cooling, and ventilation. Other building loads, both steam and propane, may be added to a larger natural line in the future.

©2018 Energy Systems Group, LLC

Existing:
The domestic hot water heating system consists of one Cemline Model V500EHB150C3-RL (500 gallons, 150 kw electric domestic hot water heater in the mechanical room.

The heating, air conditioning, and ventilation system consist of five Trane packaged, side discharge type, all electric rooftop units with electric heat as a primary source of heating and airside economizers.

Unit #BB-2 – Trane Model TSC120 (10 ton) capacity
Unit #BA-2 – Trane Model TSC120 (15 ton) capacity
Unit #BA-1 – Trane Model TCD180 (15 ton) capacity
Unit #BB-1 – Trane Model TCS120 (10 ton) capacity
Unit #AHU-3 – Trane Model TSC072 (6 ton) capacity

Recommendations:

Natural Gas Line:
Installation of a new 2" polypropylene underground gas line from the rear of the Boiler Plant to housing Unit B. The gas piping will run from the existing meter to the southeast side of Unit B and include a new pressure regulator at the existing meter, shutoffs, and specialties at both ends. Installation includes excavation, gas line bedding materials, backfilling per gas supplier, and National Fuel Code requirements. Areas disturbed during installation will be returned to pre-construction conditions with seeding and repair of concrete and blacktop.

DHW Heater:
- Install one Lochinvar Model AWN801PM (800MBh Input) or equal, condensing gas fired modulating hot water boiler set on new 4" – 2' X 4' concrete housekeeping pad (Boiler is 15.5" W X 42.5" deep)
- Install new gas piping to connect from a new underground gas line run from boiler plant to Unit B with new pressure regulator from 20 psig to recommended gas pressure for new DHW heater.
- New power wiring from the main panel to new DHW heater.
- New insulated 2" copper piping and shut off valves to connect new boiler to existing 500-gallon storage tank and piping system.
- Enlarge existing concrete HK pad to accommodate new DHW heater.
- New pressure relief valves and piping to a nearby floor drain.
- Vent hot water heater through the sidewall of Unit B outside of existing mechanical room.

Heating & Cooling Systems:
- Disconnect, remove, and dispose of the existing five Trane packaged rooftop units and replaced with five new York natural gas fired heating and electric cooling rooftop units as listed below:
  - Qty. (2) Model ZF120N24R4A1AAA1A2 (10 ton / 2 stage cooling, 240MBH Input, 11 EER, 460/3) or equal
  - Qty. (2) Model ZF180AN30D4C1AAA1A2 (15 ton / 2 stage cooling, 300MBH Input, 10.8 EER, 460/3) or equal
  - Qty. (1) Model ZF078N18D4A1AAA1A2 (6.5 ton / 2 stage cooling, 180MBH Input, 11.2 EER, 460/3) or equal
- Units to include fresh air economizer, powered exhaust, curb adapter, and new smoke detector if needed.
- New internally insulated sheet metal ducting to connect each new unit to existing duct system according to SMACNA Code.
- Modify existing steel roof supports to set new rooftop units.
- Provide crane and rigging for removal and disposal of existing units and setting of new units.

©2018 Energy Systems Group, LLC

- Install new properly sized power wiring and disconnects for new RTUs.
- Outside ventilation air to be adjusted to required amounts per ACA recommended standards in the new units.

Assumptions:

- Natural gas pressure at the Boiler Plant from the main meter is 20 psig.
- Natural gas volume at the Boiler Plant from the main meter is sufficient for this conversion.
- Existing air distribution system to be reused in the current modified state.
- New direct digital controls installed as part of the Energy Management System measure.
- Existing small electric booster tank for the "hot shots" to remain.

FM/TBS # 6 – Replace Underground Steam & Condensate Lines of the West Loop

Concept:
Appendix T of the RFQ includes a measure for the replacement of the steam and condensate lines of the West Loop, This measure will address the complete replacement of the steam and condensate lines of the West Loop.

The West Loop of the steam and condensate distribution system was installed in 1964. The piping system is beyond its useful life. Installation of new buried 8" steam line and 4" condensate return line is needed to replace the lines.

Existing:
Currently there are approximately 1200 linear feet of buried steam and condensate return lines that leave the steam plant and circles around the west side of the facility. Infrared photos of the routing of the existing lines show underground leaks in several areas. Connections are made to buildings via manholes.

Recommendations:
Option #1 - Installation of new steam and condensate lines from the boiler house completely underground following the current path of the lines and reconnections to the affected buildings. Installation includes new 8" underground welded steel steam supply piping and 4" underground welded steel condensate return piping. Installation to include excavation, steam and condensate line bedding materials (Gilsulate), and backfilling, seeding, and repair of concrete and blacktop areas disturbed during installation which will be returned to pre-construction conditions. (This option is included in our project cash flow)
Option #2- Installation of new steam and condensate lines above ground just outside of the perimeter fence. Install all ancillary equipment necessary such as condensate receivers, pumps, electrical requirements, insulation and insulation coverings, etc., to ensure all condensate is returned to the plant as hot as possible for boiler reuse. Exact path and location to be determined by facility staff. (This option is more costly and can be re-evaluated during the IGA.

Assumptions:
- Work to be completed during the summer months.
- Elimination of steam for domestic hot water for system tie-ins for the buildings to be intermittent and limited.

©2018 Energy Systems Group, LLC

FM/TBS # 7 – Energy Management System (EMS) Implementation and Upgrades

Concept:
Appendix T of the RFQ includes a measure for Energy Management System (EMS) implementation and upgrades, Web-based, open protocol EMS upgrades and implementation of proper setbacks, scheduling, and optimum start strategies, including limited Boiler Plant controls. This measure will address energy management functions in 15 of the largest buildings that cover more than 65% of the conditioned air in the main buildings. **ESG has selected Conexus, a current vendor of SCI Muncy who knows the facility quite well, as our controls partner for this portion of work.**

Boiler controls are limited and the addition of O2 trim control of the natural gas boilers in the Boiler Plant allow the ability for remote monitoring of select existing control parameters in the CUS office. ESG has prepared a full boiler control system (see Appendix) but due to cash flow limitations that expansion was not included. The expanded boiler control system would be best included in the Boiler Plant scope with a new summer boiler (see Appendix for ECMs not included).

Significant energy savings and increased comfort potential exists by adding and upgrading energy management systems for most of the buildings in the complex. Such a new system would include the ability to remotely monitor and manipulate the systems. Control modifications can increase occupant comfort and reduce energy waste.

Existing:
Most of the older buildings with steam radiators do not have automatic temperature controls and subsequently overheat in the mild portions of the winter. The windows are opened to cool the spaces causing significant wasted steam heat. Radiator mounted controls are not reliable.

Three of the buildings, J Unit, S Unit, and the Warehouse, have electronic controls which were installed at construction. These systems are in need of upgrade and recommissioning. There is no central monitoring available.

Recommendations:
Implementation of temperature setbacks, heating reset, scheduling, and optimum start strategies are included for the following buildings.

- Replace the JCI controls in J Unit Inmate Housing:
  - ESG will replace the (7) JCI DDC controllers in Unit J with BACnet IP controllers. All sensors, relays, valves, dampers, wiring conduit etc. will be reused where possible. ESG will reprogram new controllers, utilizing energy saving strategies such as reset schedules, where possible.
  - All inputs and outputs will be commissioned, and any failed field devices will be repaired or replaced.

- Upgrade the Delta controls in S Unit Inmate Housing DDC:
  - ESG will commission the existing Delta controls system. ESG will reprogram existing controllers, utilizing energy saving strategies such as reset schedules, where possible. Replace any failed sensors

- Recommission the Delta controls in the Warehouse:
  - ESG will commission the existing Delta controls system. ESG will reprogram existing controllers, utilizing energy saving strategies such as reset schedules, where possible. Replace any failed sensors

- New BACnet controls for Unit B Bethume:
  - ESG will install (5) BACnet IP controllers for the new natural gas fired rooftop units.
  - ESG will provide and wire (5) new space temperature sensors.

©2018 Energy Systems Group, LLC

- ESG will install a BACnet IP controller for control of new natural gas domestic hot water heater including water temperature sensor and status for the hot water pump.

- Administration Building - Zone control of steam heating:
  - ESG will provide (3) 3" modulating steam valves, (3) tamper proof zone sensor, (1) outdoor air sensor and a BACnet IP controller.
  - This new system will be programed to prevent overheating and allow for occupied /unoccupied control.
  - VRF systems with a BACnet IP interface will be monitored by the EMS.

- Education Building - Zone control of steam heating:
  - ESG will provide (3) 3" modulating steam valves, (3) tamper proof zone sensor, (1) outdoor air sensor and a BACnet IP controller.
  - This new system will be programed to prevent overheating and allow for occupied /unoccupied control.
  - VRF systems with a BACnet IP interface will be monitored by the EMS.

- Building A Newman Housing - Zone control of steam heating:
  - ESG will provide (3) 3" modulating steam valves, (3) tamper proof zone sensor, (1) outdoor air sensor and a BACnet IP controller.
  - This new system will be programed to prevent overheating and allow for occupied /unoccupied control.

- Building C McCauley Housing - Zone control of steam heating:
  - ESG will provide (3) 3" modulating steam valves, (3) tamper proof zone sensor, (1) outdoor air sensor and a BACnet IP controller.
  - This new system will be programed to prevent overheating and allow for occupied /unoccupied control.

- Building E Smith Housing - Zone control of steam heating:
  - ESG will provide (3) 3" modulating steam valves, (3) tamper proof zone sensor, (1) outdoor air sensor and a BACnet IP controller.
  - This new system will be programed to prevent overheating and allow for occupied /unoccupied control.

- Building F Tener Housing - Zone control of steam heating:
  - ESG will provide (3) 3" modulating steam valves, (3) tamper proof zone sensors, (1) outdoor air sensor and a BACnet IP controller.
  - This new system will be programed to prevent overheating and allow for occupied /unoccupied control.

- Building G Sproul Housing - Zone control of steam heating:
  - ESG will provide (3) 3" modulating steam valves, (3) tamper proof zone sensors, (1) outdoor air sensor and a BACnet IP controller.
  - This new system will be programed to prevent overheating and allow for occupied /unoccupied control.

- Building H McCormick Housing - Zone control of steam heating:

©2018 Energy Systems Group, LLC

- ➢ ESG will provide (3) 3" modulating steam valves, (3) tamper proof zone sensors, (1) outdoor air sensor and a BACnet IP controller.
- ➢ This new system will be programed to prevent overheating and allow for occupied /unoccupied control.

- Building I Lamade Housing - Zone control of steam heating:
  - ➢ ESG will provide (3) 3" modulating steam valves, (3) tamper proof zone sensors, (1) outdoor air sensor and a BACnet IP controller.
  - ➢ This new system will be programed to prevent overheating and allow for occupied /unoccupied control.

- Building K Sones Housing - Zone control of steam heating:
  - ➢ ESG will provide (3) 3" modulating steam valves, (3) tamper proof zone sensors, (1) outdoor air sensor and a BACnet IP controller.
  - ➢ This new system will be programed to prevent overheating and allow for occupied /unoccupied control.

- Building M Wolf Housing - Zone control of steam heating and air handling systems:
  - ➢ ESG will provide (3) 3" modulating steam valves, (3) tamper proof zone sensors, (1) outdoor air sensor and a BACnet IP controller.
  - ➢ This new system will be programed to prevent overheating and allow for occupied /unoccupied control.
  - ➢ ESG will provide BACnet IP controllers for the air handling units.

- Boiler Plant O2 trim and remote monitoring:
  - ➢ ESG will provide O2 trim controls for the two existing natural gas fired boilers.
  - ➢ ESG will provide BACnet IP controllers for integration into the Siemens boiler control system for remote monitoring through the new EMS system.

- Connect buildings included in this measure together.
  - ➢ ESG will utilize the existing state network and connect (16) buildings, with a new energy management system EMS workstation located in the maintenance area. The new EMS workstation will have user friendly graphics, centralized monitoring, alarming, scheduling, and history collection / storage.
  - ➢ This new network will communicate via BACnet IP and will allow for future expansion of additional buildings.

This measure includes 65% of the conditioned square footage of the campus. Other buildings will most likely be added at the time of the IGA.

Assumptions:

- Provide engineering, design, installation, graphics and materials for the DDC Controls at SCI Muncy.
- Assumes unobstructed, unrestricted access to work areas shown on referenced bid documents
- Provide and install new field devices (control panels, sensors, controls, and control wiring) as necessary to accomplish design goals. In general, work of this proposal will include controls for the devices shown on referenced bid documents and/ or included herein.
- Includes electrical installation of referenced control components and wiring (wiring carrying 24 volts and lower) only. Proposal does not include any work associated with power wiring unless so stated.
- Does not include any testing of equipment to remain.
- Includes Commissioning, Demonstration, & Training services as listed herein.

©2018 Energy Systems Group, LLC

- All listed work to occur during normal working hours (SCI Muncy normal working hours supplied were defined to be Monday through Friday, 7 AM to 3:30 PM daily).
- ESG will provide Distech Controls, an open protocol BACnet direct digital control building automation system or equal.
- All electrical wiring located inside any mechanical/electrical room or exposed area will be installed in EMT conduit
- All electrical wiring located outside exposed to elements will be run in rigid conduit.
- All electrical wiring located within concealed areas will be run open plenum.
- Fire alarm interfaces are limited to 24 volt dry contacts, provided by others, where required and if applicable.

FM/TBS # 8 – Replacement Windows

Concept:
Appendix T of the RFQ includes a measure for the replacement of windows in buildings A, C, E, G, H, I, M and #10. This measure will address the replacement of the windows in A, C, E, G, I, and M. Due to excessively long paybacks Building H and #10 replacements are not included in the cash flow.

The existing windows in the masonry buildings are very old and need to be replaced. Upgrading to new windows will reduce energy consumption, increase security, decrease maintenance costs, and improve the aesthetics of the buildings.

Existing:
The original masonry buildings were built with double hung, wooden sash windows. The windows have single pane glazing. Many are in disrepair.

Recommendations
Replacement of the existing windows with the same type of replacement windows installed at the Edcucation Building. This measure includes:

- Remove security grills and screens
- Remove and dispose of window sashes
- Infill the masonry opening to the R.O. of the window with pressure treated 2”x10” lumber
- Install sill seal between existing construction and new pressure treated lumber
- Install white aluminum coil stock to cover pressure treated lumber
- Install Azek trim pieces on the exterior to allow for the installation of the security screen
- Remove debris and clean work area
- Install new single hung window with half extruded screen
- The basis of design is the Viwinco PVC window model Oceanview
- Security screen is full length by Larson, Genesis security screen
- Glazing to be 15/16” insulating glass, Lami/Low-E tempered with deluxe interior grids
- Detailed specifications in the Appendix
- Building A 110 units; Building C 120 units; Building E 113 units; Building G 78 units; Building M 78 units

Assumptions:

- Interior painting or patching not included
- No asbestos currently in the window framing

©2018 Energy Systems Group, LLC

ECMs not listed in Appendix T, developed by ESG and included in the Project

ESCO #1 – Water Conservation and Plumbing Controls

Concept:
Bathroom fixtures offer good water saving opportunities because many of these fixtures can be retrofit to reduce the amount of water consumed per flush (toilets and urinals) or per minute of use (sinks and showers). Reducing sink and shower water usage also saves the thermal energy used to make hot water. I-CON Systems retrofits for penal fixtures include flush valve flow control and programmable electronic controls to limit the frequency of fixture use and conserve water.

The I-CON system includes two major components: the sensor and the controller. The force-activated touch sensor is electronic, with no moving parts, and is virtually vandal proof due to its rugged, stainless-steel housing. The sensor's design has been tested for over 1 million prison activations. The controller is an electronic device that manages the operation of plumbing valves. When an input signal is received from a sensor, the controller sends an output signal to the solenoid directing it to open the valve it is attached to and then to close the valve again after a pre-programmed time.

The flush valve system also includes the unique MOMENTUM flush valve for toilet retrofits. The MOMENTUM flush valve increases the velocity of water flow to allow for reduced gallons per flush and has no moving parts, unlike existing valves with mechanical or pneumatic cartridges.

Existing Conditions:
Existing fixture data was taken from various sources. To the extent possible during the preliminary site survey, bathrooms in staff, visitor, inmate dormitories, and inmate non-housing areas were audited. ESG surveyed the toilets, urinals, sinks, and showers, recording counts, types, and manufacturer's rated flows. The remaining fixture quantities, types, and flows were extrapolated based on its partial audit and on the type and size of buildings not surveyed. Quantities shown below are a reasonable estimate for the total site.

Most of the existing toilets flush at 3.5 gpf. The majority of toilets are flushometer type. The existing staff bathroom urinal fixture is high flow at 1.5 gpf. Throughout the site, the majority of sink faucets can be retrofit to low flow specifications. The remaining sinks are already low flow or are utility sinks for which flow restriction is not recommended. Showerheads in these areas and in wet cell areas are standard institutional type: most are high flow (2.5 gpm). Domestic fixture quantities are summarized in the table below; fixture counts and flow rates are also shown in the Appendix.

ESG surveyed SCI Muncy's wet cell areas and identified a total of 749 flush valves that can be retrofit with I-CON controls. The majority of wet cell toilet fixtures were high flow, with a mix of stainless steel combination fixtures and old penal china fixtures. Not all housing units were available for survey: fixture quantities, types, and flows were estimated for buildings that were not seen. Quantities shown below are a reasonable estimate for the total site.

©2018 Energy Systems Group, LLC

Recommendations:
ESG is proposing to install the following energy saving devices at SCI Muncy.

Site	Toilets		Urinals		Sinks		Showers	
	Existing	Retrofit	Existing	Retrofit	Existing	Retrofit	Existing	Retrofit
SCI Muncy	102	69	1	1	100	94	130	74

- 64 flushometer toilets will be replaced like for like with new, 1.28 gpf fixtures
- 3 tank toilets will be replaced like for like with new, 1.28 gpf fixtures
- 2 existing stainless steel penal flushometer toilets will be fitted with 1.6 gpf flush valve diaphragm kits
- One existing urinal will be fitted with a 1.0 gpf flush valve diaphragm kit
- 94 existing sink faucets will be retrofit with 0.5 gpm aerators
- 17 existing showerheads in staff and inmate dormitory bathrooms and 57 existing showerheads in inmate wet cells (74 total) will be replaced with new new correctional grade security, 1.5 gpm showerheads

ESG is proposing to also install the following energy saving devices at SCI Muncy.

Site	Wet Cell Combination or Penal Toilet Fixtures	
	Existing	Retrofit
SCI Muncy	758	749

- 749 penal flush valves in wet cell areas will be retrofit with I-CON Systems electronic programmable controls

The I-CON retrofit will reduce the average gallons per toilet flush for penal, stainless steel, combination fixtures from 3.5 gpf to 1.8 gpf, and from 3.5 gpf to 2.4 gpf for older penal china flushometer toilets. The I-CON controls will be programmed such that inmates can flush twice within 5 minutes before the system locks out for one hour to reduce nuisance flushing.

Based on the existing plumbing and electrical configurations observed during the survey, the controllers installed in older housing units will be hard-wired. Transformers will be installed in mechanical rooms on existing circuits and low voltage wiring will be run to all necessary plumbing chases. The cells in the newer housing units (R, S, and J) currently have power outlets in the plumbing chases. Controllers installed in these cells will have plug-in transformers.

See Appendix for full Scope of Work description.

Assumptions:

- Population counts, occupancy profiles, and fixture usage profiles
- It is assumed that the fixtures in areas accessible during the site survey are representative of fixtures in areas that could not be accessed
- Hot water is 110°F; warm water is 105°F; cold water is 60°F. Temperatures will be adjusted to meet ACA standards.

©2018 Energy Systems Group, LLC

ESCO #2 – Install Walk-In Box Controls

Concept:

Walk-in coolers and freezers can consume a large amount of electrical energy. These units use a typical refrigeration cycle with either an air or water cooled condenser. The fans run continuously.

Existing:

The walk in boxes reduce the temperature in the space by removing heat by forced-circulation evaporators containing fans powered by fractional horsepower motors. These fans run continuously even though full airflow is only required about half of the time.

Recommendations

A controller designed for this environment will be used to slow the evaporator fans when the full-speed operation is not required. The controller does this by applying a lower voltage to the fan motor thereby producing less force, therefore lowering the power required to run the fans. Additionally, the Smart Electric Defrost capability of the controls determines when a defrost cycle is required rather than just using a timer controlled cycle. The walk in cooler and freezer controllers do not affect the quality of the food products stored in them.

While the system maintains the temperature in the cooler or freezer, it also controls the evaporator fans. The evaporator fans are turned off approximately 40-85% of the time that the compressor is off, depending on existing cooler sizing and configuration. This reduction in fan energy use also results in less heat introduced into the cooler from the fan motors. The system is also programmed to control the defrost operation and to notify the user of any potential problems that may arise during normal operation thus reducing both maintenance and product loss.

- Provide and install a new Frigitek controller for each walk-in box at Central Kitchen and Warehouse
- Provide programming for each unit
- Provide start up and warranty
- Provide training for maintenance personnel
- 15 Year full replacement manufacturer's warranty
- Automatic restart on power failure
- Surge protection incorporated into the circuitry to protect the compressor against momentary power outages and short cycling
- Fully compatible with most energy management systems
- UL Listed
- The controller is maintenance free and helps reduce compressor maintenance
- "State-of-the-art" microcomputer controller – LED indicators to show operating modes
- Maximum year-round efficiency

Assumptions:

- Existing evaporator fan motors run 8,760 hours per year
- Shaded pole motors in existing evaporators
- Anti-sweat door heaters run continuously, 8760 hours per year
- Walk in box cooler/freezer sizes, compressor loads are estimated and shown in the calculations along with other detailed assumptions.

©2018 Energy Systems Group, LLC

d. The degree to which the Quote demonstrates the technical feasibility, suitability, reasonableness, comprehensiveness, and acceptability of the proposed ECMs, including the proposed equipment and quality of said equipment for the proposed savings.

All of the ECMs developed for this project were either taken from the core ECM listing in Appendix T or developed through knowledge gained by multiple site visits and input provided by the PA DOC staff at SCI Muncy. All the ESG developed ECMs for SCI Muncy have been implemented by ESG at other correctional facilities throughout the country with great success. A complete detailed description of each ECM has been provided in the previous Section C, ECM listing.

e. Training to be provided to funding agency staff

ESG has a successful track record of providing valuable technical training and supplements through its highly skilled training staff supported by experienced engineers and project personnel. ESG also utilizes Equipment and Controls Manufacturer's personnel to facilitate specific product training. While some areas of the training are standardized, most of the supplied instruction is customized and tailored to be directly associated to the energy conservation measures implemented during construction. ESG works closely with all key facility operations personnel to deliver educational training and seminars on the operation of their specific ECMs as new assets are being brought on line and will continue this training during the guarantee and maintenance services phase.

This customized and continual training program ensures correct operation of equipment, optimal efficiency, and maximum extension of equipment life throughout the term of the agreement. What has worked well for ESG with previous clients is to combine on-site system specific training with equipment sponsored classroom training. We have always found the training that occurs on-site and is done on the specific equipment installed there, is always more meaningful than classroom work. The result of this training will be a staff member that continually improves and sustains operating efficiency.

ESG's comprehensive training program includes five (5) major components:

- Customized Maintenance Staff Training And Cross Training
- Energy Cost Reduction Training
- Manufacturer Training
- On-site Training
- AEE training center classes

Note: All of our training programs will be video-taped for future use by new hires and refresher courses for existing SCI Muncy staff.

Customized Maintenance Staff Training and Cross Training:
Personal interviews of maintenance staff are conducted by an ESG Training Specialist as an integral part of the maintenance staff training program to determine skill levels based on professional experience, education, and prior training. Utilizing the information gathered in these interviews, and with input provided from the facility, the ESG Training Specialist selects appropriate classroom educational modules and develops custom training tailored to the needs and skill levels of the staff to be trained. A typical program could contain three classroom days of instruction and two days of hands-on training on actual ECM equipment and/or systems for each staff member. The interviews are conducted before the project installation begins and provides an opportunity to educate the maintenance staff about the project, as well as obtain their support and assistance from the beginning of the project.

©2018 Energy Systems Group, LLC

ESG will work with facility personnel to evaluate individual capabilities and propose tailored training programs that meet the needs of the Facility. Many of these training classes are video and audio recorded allowing the staff and service personnel to maintain a library for either refresher courses or new employee orientation.

Program Objective
Improve existing operational efficiency of building energy systems and enhance facility environmental comfort by training and cross training the maintenance staff in the basics of HVAC as well as electrical theory and operation.

Program Topics can include:

HVAC Equipment and Maintenance
Supply, Return, and Exhaust Air Systems
Balancing for Energy Conservation
Building Electrical Distribution Systems
Steam and Central Systems
Basic HVAC System Theory
Air and Water Balance Procedures
Electrical Equipment Maintenance
Electrical Controls

Energy Cost Reduction Training
ESG has significant in-house resources and advanced technical capabilities to provide the facility with a better understanding of energy conservation technologies and their usage. The complete understanding of overall facility operations and energy consumption that ESG incorporates into its energy cost reduction training will be of great benefit to the facility. The use of in-house ESG personnel for this component of the training, and their extensive experience in identifying and implementing energy conservation methods, will ensure the facility realizes energy and operational savings.

ESG regularly conducts a wide range of seminars to assist facility in effectively reducing energy costs. These seminars are adapted to each project and include training manuals, educational CDs, and instructional videotapes that reinforce the training.

Energy Cost Reduction Training will be performed on-site to eliminate staff downtime, and will include the information itemized above, as well as information and instruction covering system architecture, operational requirements, and control strategies that can be employed to ensure energy savings.

Manufacturer Training
ESG is vendor and product neutral, with no vested interest in any particular vendor or manufacturer. This impartiality allows us to incorporate the training from the appropriate manufacturer or service provider as the situation warrants. Most manufacturers' offer excellent training, but the training is often focused solely on their product lines. ESG can incorporate an annual training allowance, paid for from guaranteed savings, which allows the facility to take advantage of the expertise of multiple manufactures that can provide both an application and theory overview for personnel.

ESG will coordinate and organize vendor training on proper equipment operation for the personnel, and will work with the manufacturer of each major piece of equipment to develop training manuals and a core curriculum that includes assembly/reassembly instructions, troubleshooting tips, and parts lists.

This training will include operation, maintenance, and troubleshooting for all major equipment items.

©2018 Energy Systems Group, LLC

On-Site Training
ESG provides on-site training for all equipment installed under the performance contracting program. Our research indicates that the most effective training takes place when performed on the actual equipment. Additionally, on-site training allows for smaller class size, customized curriculum, and less downtime for maintenance personnel.

Training is performed throughout the term of the contract in order to update skills, provide the latest information, and train new personnel. Training programs are taped as a reference tool for personnel and new staff.

ESG will prepare tutorials and other training materials (including videos, CDs, and text) that will assist the State in training new staff, as well as providing a library of training materials for existing personnel.

Part of the on-site training involves monitoring strategies to ensure that maintenance personnel are knowledgeable of how to properly monitor the performance of all equipment installed as part of the project, as well as any related systems involved in the savings to be produced.

f. Degree to which proposal meets future needs of the Commonwealth

The project proposed by ESG addresses all the core ECM's listed in Appendix T which will ensure long-term continued operations at SCI Muncy and eliminate the need to allocate capital to pay for these facility improvements. The proposed annual energy savings fully funds the project from savings thus benefiting the taxpayers of Pennsylvania for many years to come. The ECMs ESG is proposing will increase the useful life span of several of the older buildings in the SCI Muncy complex which in turn might deter the need to build newer more costly facilities.

g. Additional ECMs included in the project

Included in the proposed project are additional ECMs developed by ESG. They are listed in Section C (above) immediately following the Base ECMs from Appendix T.

There is also an extensive list of additional ECMs which can be considered during the Investment Grade Audit should DGS or DOC desire to include any of them in the final project.

©2018 Energy Systems Group, LLC

h. Costs

GESA 2017-2 SCI Muncy

ECM Group	ECM	Annual Guaranteed Energy and Cost Savings and Project Costs Summary										
		Electric (kWh/yr)	Electric ($/yr)	Heating Fuel (Therms)	Heating Fuel ($/yr)	Water/Sewer (kgal/yr)	Water/Sewer ($/yr)	Total Cost Savings ($/yr)	Utility Rebates	Implementation Cost without Rebate	Net Implementation Cost (w. Rebate)	Net SPB (years)
APPENDIX T ECM - Electrical Measures (EM)	EM #1 - Upgrade Interior and Exterior Lighting to LED	1,374,575	$96,024	0	$0	0	$0	**$96,024**	68,729	**$1,475,050**	**$1,406,322**	**14.6**
	EM # 2 - Install Interior Lighting Controls	13,873	$969	0	$0	0	$0	**$969**	694	**$59,814**	**$59,120**	**61.0**
	EM #3 – Install Solar Photovoltaic (PV)	625,000	$43,661	0	$0	0	$0	**$43,661**	0	**$1,160,724**	**$1,160,724**	**26.6**
APPENDIX T ECM - Facility Mechanical & Thermal Building Systems (FMTBS)	FM/TBS 1 - Steam Traps Replacement	0	$0	63,088	$26,181	0	$0	**$26,181**	0	**$812,031**	**$812,031**	**31.0**
	FM/TBS 2 - Replace Window AC with VRF	13,094	$915	0	$0	0	$0	**$915**	655	**$610,039**	**$609,385**	**666.2**
	FM/TBS 3 - Add Exhaust Hood Controls	46,608	$3,256	4,502	$1,868	0	$0	**$5,124**	2,330	**$65,435**	**$63,105**	**12.3**
	FM/TBS 4 - Replace Refrigeration Equipment	71,429	$4,990	0	$0	0	$0	**$4,990**	3,571	**$96,051**	**$92,480**	**18.5**
	FM/TBS 5 - Convert Unit B to Natural Gas	1,191,834	$83,258	-49,177	-$20,408	0	$0	**$62,850**	59,592	**$812,743**	**$753,152**	**12.0**
	FM/TBS 6 Replace Steam & Condensate Line (West Loop)	0	$0	133,611	$55,449	0	$0	**$55,449**	0	**$1,676,885**	**$1,676,885**	**30.2**
	FM/TBS 7 - Energy Manage Systems (EMS)	0	$0	138,118	$57,319	0	$0	**$57,319**	0	**$749,989**	**$749,989**	**13.1**
	FM/TBS 8 Replace Windows (Building A,C,E,G&I)	0	$0	15,108	$6,270	0	$0	**$6,270**	0	**$1,914,805**	**$1,914,805**	**305.4**
ESCO - ESG Recommended ECMs	ESCO 1 - Water Conservation & Plumbing Controls	0	$0	13,039	$5,411	19,369	$364,528	**$369,939**	0	**$2,653,257**	**$2,653,257**	**7.2**
	ESCO 7 - Walk-in Freezer and Cooler Controllers	36,360	$2,540	0	$0	0	$0	**$2,540**	1,818	**$19,275**	**$17,457**	**6.9**
	TOTAL (For ECMs Listed Above)	**3,372,773**	**$235,613**	**318,288**	**$132,090**	**19,369**	**$364,528**	**$732,230**	**137,389**	**$12,106,100**	**$11,968,711**	**16.5**

Guaranteed Annual Cost Savings	$ 732,230

Note: "Total energy savings projected in the final scope of work will be at least 95% of the savings projected in the quote, the actual ECM costs shall be within 10% of the costs listed in the IGA."

©2018 Energy Systems Group, LLC

GESA 2017-2 SCI Muncy, PA

ENERGY PERFORMANCE CONTRACT CASH FLOW

Financials Updated	4/30/2018	
Interest Rate (LLC)	**3.00%**	
Total Project Value	$12,106,100	Includes Engineering Services
Utility Rebates	$137,389	
Loan Value	**$11,968,711**	
Loan Repayment Period (yrs)	**20**	
Payment Frequency	**Annual**	
Energy Cost Esc./yr	1.0%	
Labor Cost Esc./yr	1.0%	
Maintenance Cost Esc	1.0%	
Construction Period (months)	**12**	
M&V Term (years)	**3**	

	A	B	C	E	F	G	I	J	K
Starting Contract Years	Annual Energy Costs **without** Improvements	Annual Energy Costs **with** Improvements	**Annual Energy Cost Savings**	**Total Including Guaranteed Savings**	**Payments for Financing equipment**	**Payment for monitoring and maintenance services**	**Net Annual Benefit**	**Cumulative Cash Flow**	**Net Present Cash Flow**
Agreed Upon Construction Savings			$ -	$ -	$ -	$ -	$ -		$ -
1	$ 1,948,537	$ 1,208,985	$ 739,552	$ 739,552	$ 712,901	$ 26,151	$ 500	$ 500	
2	$ 1,968,022	$ 1,221,075	$ 746,948	$ 746,948	$ 720,035	$ 26,413	$ 500	$ 1,000	$ 957
3	$ 1,987,703	$ 1,233,285	$ 754,417	$ 754,417	$ 727,241	$ 26,677	$ 500	$ 1,500	$ 1,414
4	$ 2,007,580	$ 1,245,618	$ 761,961	$ 761,961	$ 761,461	$ -	$ 500	$ 2,000	$ 1,859
5	$ 2,027,655	$ 1,258,074	$ 769,581	$ 769,581	$ 769,081	$ -	$ 500	$ 2,500	$ 2,290
6	$ 2,047,932	$ 1,270,655	$ 777,277	$ 777,277	$ 776,777	$ -	$ 500	$ 3,000	$ 2,709
7	$ 2,068,411	$ 1,283,362	$ 785,050	$ 785,050	$ 784,550	$ -	$ 500	$ 3,500	$ 3,115
8	$ 2,089,095	$ 1,296,195	$ 792,900	$ 792,900	$ 792,400	$ -	$ 500	$ 4,000	$ 3,510
9	$ 2,109,986	$ 1,309,157	$ 800,829	$ 800,829	$ 800,329	$ -	$ 500	$ 4,500	$ 3,893
10	$ 2,131,086	$ 1,322,249	$ 808,837	$ 808,837	$ 808,337	$ -	$ 500	$ 5,000	$ 4,265
11	$ 2,152,397	$ 1,335,471	$ 816,926	$ 816,926	$ 816,426	$ -	$ 500	$ 5,500	$ 4,626
12	$ 2,173,921	$ 1,348,826	$ 825,095	$ 825,095	$ 824,595	$ -	$ 500	$ 6,000	$ 4,977
13	$ 2,195,660	$ 1,362,314	$ 833,346	$ 833,346	$ 832,846	$ -	$ 500	$ 6,500	$ 5,317
14	$ 2,217,617	$ 1,375,937	$ 841,679	$ 841,679	$ 841,179	$ -	$ 500	$ 7,000	$ 5,648
15	$ 2,239,793	$ 1,389,697	$ 850,096	$ 850,096	$ 849,596	$ -	$ 500	$ 7,500	$ 5,969
16	$ 2,262,191	$ 1,403,594	$ 858,597	$ 858,597	$ 858,097	$ -	$ 500	$ 8,000	$ 6,281
17	$ 2,284,813	$ 1,417,630	$ 867,183	$ 867,183	$ 866,683	$ -	$ 500	$ 8,500	$ 6,583
18	$ 2,307,661	$ 1,431,806	$ 875,855	$ 875,855	$ 875,355	$ -	$ 500	$ 9,000	$ 6,877
19	$ 2,330,738	$ 1,446,124	$ 884,614	$ 884,614	$ 884,114	$ -	$ 500	$ 9,500	$ 7,162
20	$ 2,354,045	$ 1,460,585	$ 893,460	$ 893,460	$ 705,345	$ -	$ 188,115	$ 197,615	$ 111,317
TOTAL	**$ 42,904,844**	**$ 26,620,640**	**$ 16,284,204**	**$ 16,284,204**	**$ 16,007,348**	**$ 79,240**	**$ 197,615**	**$ 197,615**	**$ 111,317**

(1) - Loan Payment including Construction Interest

i. Proposed energy analysis demonstrates sound engineering principles and the reasonableness of the proposed savings.

In order to clearly evaluate sound engineering principles and the reasonableness of the proposed savings, ESG has provided detailed energy calculations as well as cutsheets, and a complete set of infrared images of the facility steam lines in the Appendix Section of this ECM Submission.

©2018 Energy Systems Group, LLC

j. Monitoring and Maintenance

The ongoing Project monitoring and maintenance services Offeror will provide.
Based on our proposed project, ESG does not anticipate a need for any outside maintenance agreements. The current SCI Muncy staff will be trained by ESG to facilitate any necessary Preventive Maintenance on installed equipment. There is currently an existing Service Agreement in place with Conexus for controls work at SCI Muncy. Should additional Service Agreements be requested from PA DOC our typical approach is as follows:

Preventive Maintenance (PM): Of existing and new equipment is a vital part of the performance period. ESG working in conjunction with equipment manufacturers will completely train the SCI Muncy Maintenance Staff in the proper preventative maintenance procedures for all project installed equipment.

Emergency Service: ESG's approach to emergency service would mirror that for PM. The scope would include an ESG staff and/or service from a qualified subcontractor to provide emergency service, as needed.

Warranty: In the O&M Manuals, ESG will provide details on warranty of labor and material for various ECMs. The warranty information will be in accordance with the program requirements. For example, the manufacturer warranty is typically 5-10 years for LEDs and associated drivers. Traditionally equipment warranties are limited to one of two years, however in some cases EGS can press for extended warranty terms, if required by DGS/DOC.

PM and emergency response services will come under the purview of our Corporate Operations Service group. The ESG Northeast Regional operations team will be responsible for coordinating the maintenance work.

k. Description of Measurement & Verification Plan

Measurement & Verification is the lifeblood of any GESA Project. ESG's M&V personnel will be involved with the project from conception to commissioning, and throughout every year of the contract term, to help establish the most appropriate and cost effective M&V protocol and the corresponding baseline determination requirements. During post-installation, M&V is critical in assuring those post installation measurements are performed according to the chosen M&V protocol, and proper documentation and analysis of these measurements are performed. The Lead Engineer, Dan Khuu will serve as the DGS's and DOC's contact point for M&V information and will use the corporate resources of ESG – Donna Wicks and the M&V team – to provide annual documentation that the installed systems are performing to the guaranteed level. M&V team members are listed on the organizational chart and have many years of M&V experience with applicable IPMVP protocols.

ESG's Core competencies and our focus are on providing our customers with **"Building Upgrades That Pay For Themselves."** A key activity of our partnership with our customers is the measurement and verification of savings results. Our customers have always received timely, accurate and easy to understand documentation of their savings results. ESG's methodologies are in full compliance with those defined in the 2010 IPMVP (Table 1 below). The majority of our guarantees utilize utility bill comparison-based M&V (Option C), which will provide an ongoing focus for our customers on operating their facilities in an energy-efficient manner. ESG will evaluate the best protocol based on the goals for the SCI Muncy as well as the appropriateness of the M&V Option for the specific ECMs Installed.

©2018 Energy Systems Group, LLC

Table 1: Overview of IPMVP Options A, B, C and D
(Based on IPMVP, Volume I, Chapter 4.7)

IPMVP Option	How Savings are Calculated	Typical Applications
Option A **Retrofit Isolation: Key Parameter Measurement** Savings determined by field measurement of key performance parameter(s) which define the energy use of the ECMs. Measurement frequency ranges from short-term to continuous, depending on the expected variations in the measured parameter, and the length of the reporting period. Parameters not measured are estimated. Estimates can base on historical data, manufacturer's specifications, or engineering judgment. Documentation of the source or justification of the estimated parameter is required. The estimated savings error from estimations is evaluated.	Engineering calculation of baseline and reporting-period energy from: • Short-term or continuous measurements of the key operating parameter(s) and • Estimated values. • Routine and non-routine adjustments as required.	A lighting retrofit where power draw is the key performance parameter that is measured periodically. Estimate operating hours of the lights based on building schedules and occupant behavior.
Option B **Retrofit Isolation: All Parameter Measurement** Savings are determined by field measurement of the energy use of the ECM-affected system. Measurement frequency ranges from short-term to continuous, depending on the expected variations in the savings and the length of the reporting period.	Short-term or continuous measurements of baseline and reporting-period energy, and/or engineering computations using measurements of proxies of energy use. Routine and non-routine adjustments as required.	Application of a VFD and controls to a motor to adjust pump flow. Measure electric power with a meter throughout the measurement period. In the baseline period, the meter measures to verify constant loading.
IPMVP Option	**How Savings are Calculated**	**Typical Applications**
Option C **Whole Facility** Savings are determined by measuring energy use at the whole facility or sub facility level. Continuous measurements of the entire facility's energy use are taken throughout the reporting period.	Analysis of whole facility baseline and reporting-period (utility) meter data. Routine adjustments as required, using techniques such as simple comparison or regression analysis. Non-routine adjustments as required.	Multifaceted energy management program is affecting many systems in a *facility*. Reconciled using with the utility meters for a twelve-month *baseline period* and throughout the *reporting period*.
Option D **Calibrated Simulation** Savings determined through simulation of the energy use of the whole facility or of a sub facility. Simulate routines to demonstrate the adequate performance of model against measured facility energy performance.	Energy use simulation, calibrated with hourly or monthly utility billing data. (Energy end-use metering may be used to help refine input data.)	Multifaceted ECMs in a facility with no metering in the baseline period, or when master-metered. Post-install energy-use measurements used to simulate calibration.

©2018 Energy Systems Group, LLC

ESG's savings results for our customers have an average **positive** deviation of more than 10%, strong evidence of our ability to accurately calculate savings.

Compliance with Customer Requirements: ESG will work with the DGS and DOC to define a customized approach for M&V that best reflects the goals of the DGS and DOC. ESG is comfortable working in partnership to customize an M&V process that is accurate, fair to both parties and also, helpful in maximizing savings results for the term of this performance contract. ESG guarantees all energy savings using the most appropriate methodology for accuracy and cost effectiveness. It is common for ESG guaranteed contracts to use multiple methodologies and data collection techniques to arrive at the best process for each facility.

Adjustment for Shortfalls and Windfalls: All savings above the Project Guarantee Amount are entirely DGS and DOC. Each year's annual savings must meet/exceed the debt service payments for that year. Any shortfall will be reconciled and paid annually by ESG in an amount equal to the shortfall as calculated by the annual energy audit and accepted by customer representatives.

Regular Interval Post-Installation Verification: At regular intervals, ESG will verify that the installed equipment or systems have been properly maintained and are operating correctly. Although annual reports are required for establishing savings guarantees, reports can be prepared more frequently, to ensure systems are working properly, allowing for adjustments throughout the year.

©2018 Energy Systems Group, LLC

FINDINGS & RECOMMENDATIONS

Window Replacement – single pane double hung windows in the housing buildings are recommended to be replaced to reduce air infiltration and increase thermal performance.

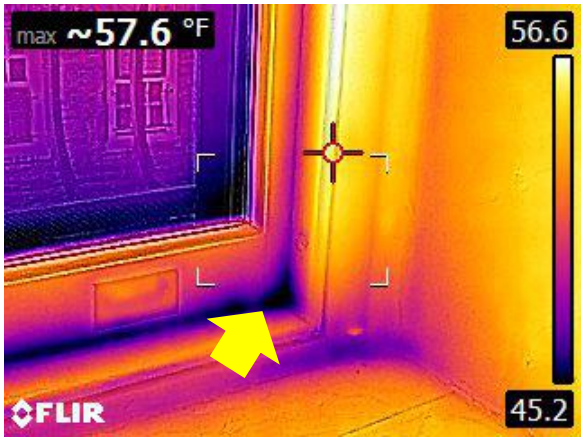

Window Replacement – cold drafts at the perimeter of the window system can clearly be seen in the infrared image above.

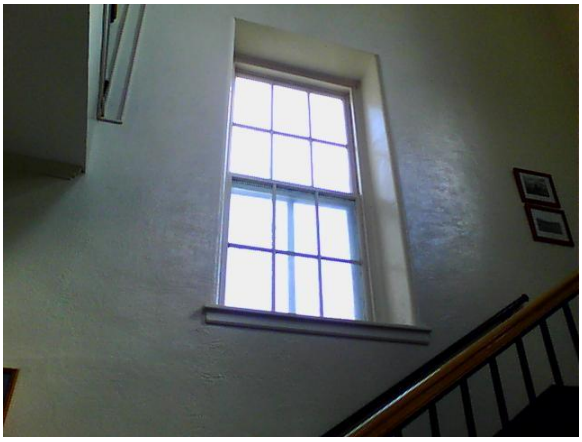

Window Replacement – single pane windows throughout the SCI Muncy campus are recommended to be replaced with more efficient double pane replacements.

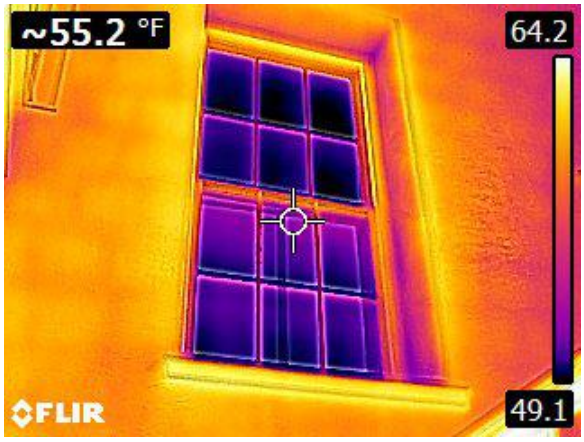

Window Replacement – temperatures similar to outdoor conditions can be seen on the surface of the single pane windows in the infrared image above. A double-paned window provides improved U-Values to the window assembly reducing unnecessary energy losses.

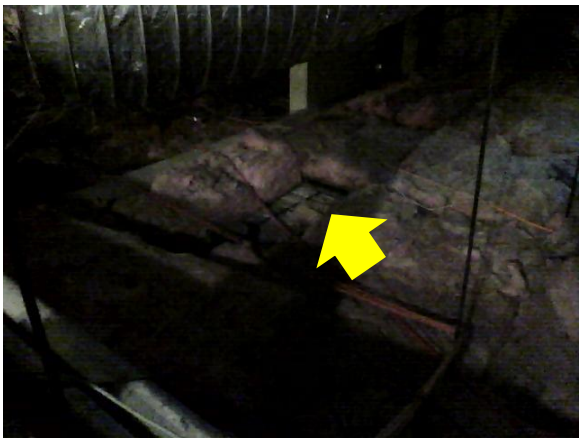

Attic Air Sealing/Insulation – scattered fiberglass batts and holes in the attic floor are allowing heat to escape the building into the unconditioned attic space.

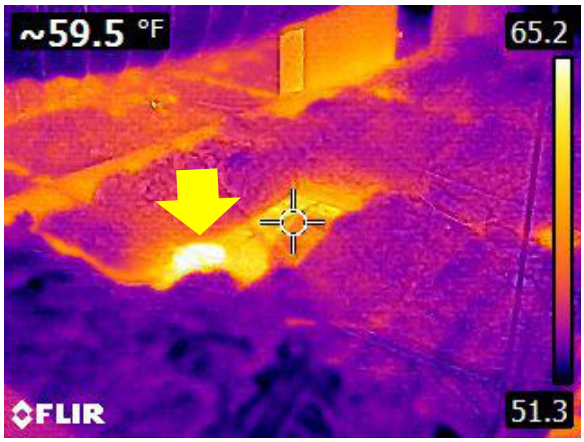

Attic Air Sealing/ Insulation – heat escaping the conditioned space below can clearly be seen in the infrared image above. Attics with floor insulation should be similar temperatures to those found outside; the higher temperatures seen in the infrared image above indicate wasted heat loss into the attic.

FINDINGS & RECOMMENDATIONS

Roof-Wall Intersection Air Sealing – the exterior flashing and finishes at the roof-wall intersection are not constructed to stop air leakage.

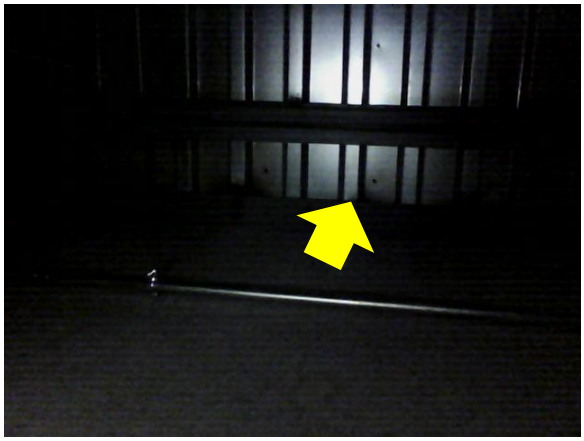

Roof-Wall Intersection Air Sealing – gaps between the roof deck and the wall framing due to trusses at the roof-wall intersection are pathways for unwanted infiltration/ exfiltration.

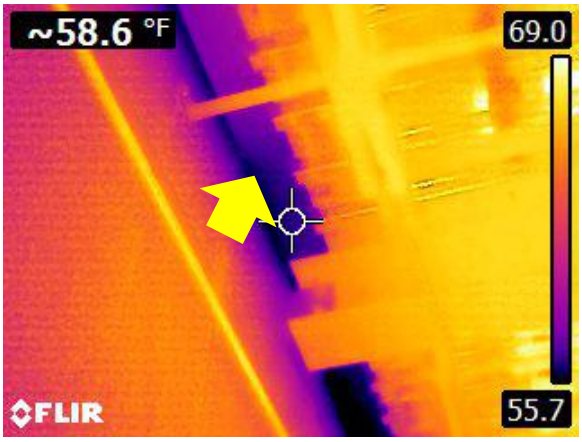

Roof-Wall Intersection Air Sealing – the roof-wall intersection is allowing air to infiltrate and exfiltrate the building as seen in the infrared image above.

Door Weather Striping – there is no weather stripping material at the perimeter of the door assembly allowing air leakage to occur. The daylight showing at the side of the door is a clear indicator of an air leakage pathway.

Door Weather Stripping – upgraded door weather stripping materials are required to stop unnecessary air leakage at the double door assembly.

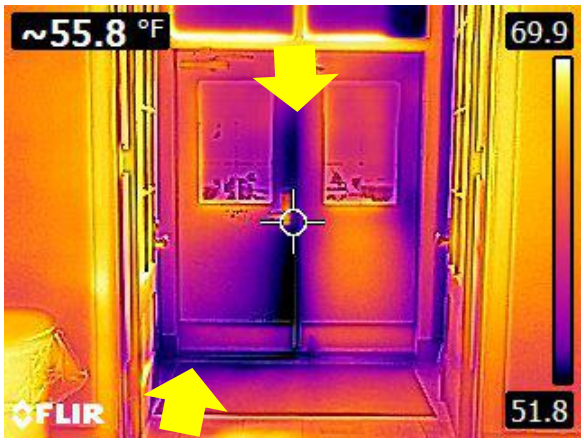

Door Weather Stripping – gaps at the center and bottom of the door clearly show up in the infrared image above. Weaknesses at the doors create cold air drafts causing discomfort among building occupants.

FINDINGS & RECOMMENDATIONS

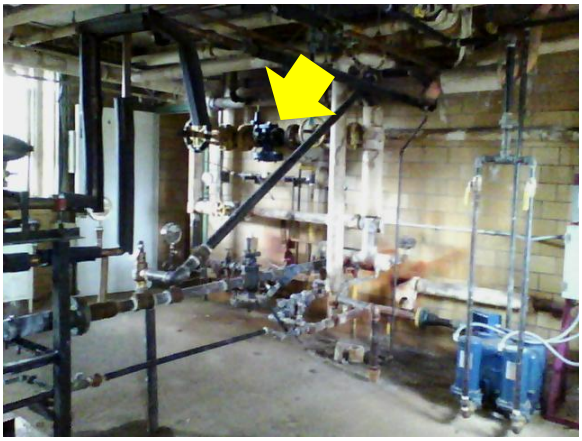

Pipe Insulation – there is very little insulation on the steam distribution pipes, fittings, and valves. Gate valves, pressure reducing valves, and straight pipe all need to be wrapped with insulation to avoid unnecessary distribution losses.

Pipe Insulation – uninsulated components are radiating heat in excess of 250°F into the basement. The heat being released from these steam distribution pipes is meant for the conditioned housing areas on the first and second floors.

Valve & Fitting Insulation – uninsulated components in the pressure reducing configuration of the steam distribution system need to be insulated in order to avoid heating losses.

Valve & Fitting Insulation – temperatures in excess of 250°F can be seen in the infrared image above radiating heat into the unconditioned basement space.

Pipe Insulation – the un-insulated pipes in the basement are releasing heat into the basement instead of the first and second floor radiators above.

Pipe Insulation – open windows in the basement are a clear sign that pipe insulation is required to control heat loss in areas not meant to be conditioned by the excessive amounts of bare steam pipes.

ADDITIONAL ECMS TO BE CONSIDERED DURING THE INVESTMENT GRADE AUDIT (IGA)

Listed in this write-up are additional Energy Conservation Measures (ECMs) that were considered and evaluated for the benefit of SCI Muncy but did not financially fit into the cash flowdue to long simple paybacks, or other reasons. These ECMs will be reconsidered and reevaluated during the Investment Grade Audit (IGA). It is important to recognize that any of the ECMs listed below can be included in the project at the sacrifice of all or part of another ECM that is currently "in" the project. If any of the ECMs listed below are high on your priority list, Energy Systems Group will work with DGS, and DOC to try to include them SCI Muncy GESA project.

Boiler Plant Upgrades

The Boiler Plant steam system needs upgrades to perform at peak efficiency. These upgrades include a new "summer" boiler and system improvements to the steam and condensate handing.

Install a new 300HP Cleaver Brooks Flex Tube – water tube, gas fired steam boiler installed at boiler plant next to 40,000 lb. boiler with new building enclosure to efficiently handle the lower summer steam loads

Install a new Cleaver Brooks Model SRG (Surge Tank) connected to existing DA feedwater tank.

Reduce steam pressure to 40 psi

The Boiler Plant currently is providing heat to the entire facility with two high pressure, natural gas fired steam boilers. The boiler capacities are 50,000lbs./hr.and 30,000 lbs./hr. with a peak winter load of approximately 18,000 lbs./hr. and summer load of approximately 5,000 lbs./hr. The existing boilers are oversized for all loads.

Currently there is no condensate surge tank to handle the varying flows of condensate back to the boiler plant. As a result, the existing DA tank is constantly overflowing. Indications from facility boiler plant operators are that condensate surges cannot be handled by existing system resulting in dumping condensate down floor drains

Currently the boiler plant operates at 90 psi. The 90 psi steam was used in the Kitchen and Laundry. The Laundry is no longer in operation. The current Kitchen steam equipment no longer requires 90 psi.

- Install a new Cleaver Brooks Water Tube Boiler Model FLX-200-1250-150ST (208/3/60)-STD/CFG
- Boiler to have a dual fuel natural gas and #2 fuel oil burner for a future back-up fuel source
- Boiler capacity will be 12,500 MBH input and 10,000 MBH output
- New steam boiler will be located in new metal building attached to the end of existing 50,000 lb. steam boiler metal building
- New main supply steam line, condensate return line, and natural gas line will connect off the existing piping at 50,000 lb. boiler room
- New electrical will be connected from main electrical panel in boiler room
- Includes all required piping (weld and screwed), valves, steam specialties, line voltage electrical, emergency stops, safety devices, insulation, and factory start up and training
- Oil storage tank is not included at this time
- Install new Cleaver Brooks Model SRG-1800-BASE 1800 gallon surge tank connected to existing DA feedwater tank
- Installation will include two condensate transfer pumps, tank stand, and all necessary components
- Adjust operating steam pressure to 40 psi

©2018 Energy Systems Group, LLC

ECM – Boiler Plant Controls

The Boiler Plant controls need to be upgraded. Newer systems that use web-based applications are now the standard. With the concept of adding a new "summer" boiler the control system needs to be considered being replaced.

The Boiler Plant controls are based on an older Siemens system. The system serves basic functions but needs to be upgraded. It also needs to be remotely monitored due to manpower constraints.

A. Major system components shall include:

1. Rockwell/Allen Bradley Compact Logix Programmable Control Processor.
2. Local Modbus network for communications with Parallel Positioning Actuators, Burner Management Control and optional Variable Speed Drive, and
3. Various Controller Input/Output Modules.
4. Burner Management Controller and Wiring Sub-Base.
5. Flame Scanner: Infrared, Ultra-Violet, or UV Self-Check.
6. Flame Amplifier, to correspond with the selected Flame Scanner.
7. Various Temperature and Pressure Sensors.
8. Alarm Bell

B. Major functions that the Boiler Control System shall provide:

1. Automatic sequencing of the boilers through standby, pre-purge, pilot flame establishing period, main flame establishing period, run and post purge.
2. Flame proving and lockout on flame failure during pilot flame proving, main flame proving, or run.
3. Low fire damper/valve position for flame ignition trials.
4. Parallel Positioning Combustion Control for Air and maximum 2 Fuels
5. Optional O2 Trim (Air Trim)
6. Utilize solid state controls and sensors to provide various control functions, such as:
    a. Parallel Positioning Full Modulation
    b. Modulating Control algorithm shall be Proportional-Integral-Derivative (PID) type.
    c. Thermal Shock Protection with water temperature monitoring and set point.
    d. Various High and Low limit alarms and shutdowns.
7. Touch Screen graphical operator interface and monitoring.

a. Minimum 10 Inch Panel View Plus Color HMI.
b. Manual control of the boiler-firing rate utilizing control screens on the HMI to increment and decrement the firing rate.
c. Interface to commission boilers combustion and other system set points
d. On screen real-time display of all connected process parameters.
e. On screen commissioning of boiler set points and configurable alarms
f. On screen display of system alarms and faults.
g. On screen water level indication (Steam if CB Level Master is used) and alarm(s)

8. Basic Remote Monitoring Only Web Server
9. Building/Plant Automation System interface (May require the CB-PT or Field Server based on the protocol used)
10. High Stack Flue Gas Temperature Monitoring, Cut-Off and Alarm
11. Tamper resistant control logic and password protection.
12. Dual Set Point (Night/Day Set Back) Capabilities.

©2018 Energy Systems Group, LLC

13. Combustion Air Temperature.
14. Boiler Shell Water Temperature (Steam Boilers).
15. Boiler Drum Water Level Indication (Steam Boilers)
16. Assured Low Fire Cut-Off (ALFCO). (Used to remote stop/start the burner)
17. 2 Boiler Lead/Lag (Optional – Common Header Transmitter required)
18. Hot Stand By
19. Alarm Silencer via touch screen HMI

C. The Boiler Control System shall provide the following safety provisions for:

1. Integrated Burner Management
   a. Examine all load terminals to assure it is capable of recognizing the true status of the external controls, limits and interlocks. If any input fails this test, the burner management system should lockout on safety shutdown.
   b. Closed-loop logic test verifies integrity of safety critical loads (ignition, pilot, and main fuel valves) and must be able to lockout on safety. Shutdown if any safety critical load is identified as proper or improper.
   c. Pre-ignition interlocks (fuel valve proof of closure, etc.) and flames signal checked during Standby and Pre-Purge.
   d. Dynamic checking of the flame signal amplifier. The control flame signal amplifier must be able to recognize a no flame signal during this dynamic amplifier check.
   e. Safe start check and expand check to include monitoring flame signal during standby.
   f. High and Low fire switches checked for proper sequencing.
   g. Tamper-proof Purge Timing and safety logic.

2. Integrated Boiler Operating Controls and Security features
   a. Operating and Modulating Control.
   b. Password protection of Programmable Controller logic.
   c. Password protection of Parallel Positioning Set Up and Commissioning screens
   d. Password protection of Critical Set Point Screens

3. The Boiler Control System shall provide annunciation and diagnostics:
   a. Active Alarm Annunciation
   b. Provide historical alarm information for on screen display
   c. Indication of failures at start up or during normal operation.
   d. Capability of alarm history of date, time, cycle of occurrence and date and time of acknowledgement up to the most recent 100 faults.
   e. Detects and isolates an alarm, and reports internal circuit faults.
   f. Primary and Secondary Low Water Shutdown and Alarms.

4. The Boiler Control System shall be able to operate in these environmental conditions.
   a. Supply Voltage: 120vac (+10%/-15%) 50 or 60 Hz.
   b. Maximum total connected load:2000 VA.
   c. Operating temperature limits: 32 to 130 ^{F}
   d. 85% RH continuous, non-condensing, humidity.
   e. 0.5G continuous vibration.

5. All Boiler Control System wiring shall be in accordance with the National Electrical Codes and local electrical codes.

©2018 Energy Systems Group, LLC

6. System shall meet current NFP85 requirements

7. Boiler Control System component functions shall be as follows:
   a. Burner Management Controller: Provides boiler sequencing logic to meet FM/IRI/UL approval body requirements.
   b. Touch Screen Graphical Interface (10 Inch Color Minimum): Provides user interface to the control system, boiler overview screen with connected boiler parameter readouts, alarm screens, optional water level indication, and system firing rate screen.
   c. Local Modbus Communication Network for communication with Parallel Positioning Actuators, Burner Management System, and optional Variable Speed Drive
   d. Various Programmable Controller Input/Output modules: Provides interface for discrete powered and/or isolated relay signals, as well as for analog signals, to and from external devices.
   e. Steam Pressure Transmitter for Steam Boilers: Provides an analog signal to the Programmable Controller for indication of boiler steam pressure. Utilized for on/off and modulating control of the burner.

ECM – Advance Remote Metering

Advanced remote metering provides enterprise level, real-time monitoring of several types of meters including power, water, sewer, gas and BTU. The 100% "cloud-based" system provides advanced analytic reporting to designated personnel via their Internet-connected PC, laptop, table, or smartphone. Modbus-based meters at each location are connected to the node which requires a simple outbound internet access to connect to the server. No static IP or firewall configuration is required. For redundancy, all data is trended and stored locally as well as remotely on the servers.

ECM – Day Lighting Harvesting – Dimming or Shutting Lights Off in Areas Where Day Lighting or Ambient Lighting is Available

ESG's correctional staff have found several locations where daylight harvesting technologies can be used without compromising the facilities safety or security. This type of lighting control can be used in correctional facilities where the outside natural light supplies more lighting than what can be supplied from the buildings lighting system. ESG will work with the correctional security and administration staff to educate all staff of the systems operations and to determine specific locations where the daylight harvesting systems can be implemented. ESG understands the sensitivity and needs to maintain the correct amount of lighting levels in correctional facilities. Daylight harvesting systems can be deployed in locations where sufficient windows are available, day lighting controls or day light harvesting controls can be added to dim or shut off the lighting on sunny days. These controls would sense the amount of natural light entering the building and based on preset security levels, can dim or turn lights on or off, as needed. This type of lighting control, once installed, works in a manner where neither staff nor inmates realize the light fixtures a dimming or shutting off, as the outside natural light surpassed the light output from the fixture.

ECM – Install Backup Heating Fuel

It was noted by ESG's correctional staff that SCI Muncy does not have a backup fuel source for their boilers. As part of our Investment Grade Audit, ESG will investigate and supply recommendations which will offer the Department of Corrections with an alternative fuel source in the event that the State of Pennsylvania or an individual facility experiences a natural gas pipe line failure or stoppage. This system will be sized proportionately depending on the heating loads of the individual facility. Although this recommendation does not pose as an energy savings project, ESG is recommending that this measure is considered by the DOC as a possible security enhancement project for the SCI Muncy facility.

©2018 Energy Systems Group, LLC

At this time, the reasoning behind this recommendation is that this facility is the only large female facility available for the DOC which houses multilevel security inmates. If an extended natural gas outage occurred, finding housing for these inmates would be extremely difficult to accomplish. During the Investment Grade Audit, ESG will supply the DOC with a recommendation for an LP gas, compressed natural gas (CNG) fuel system or fuel oil which will allow for fuel redundancy or backup fuel source in case of an emergency to the natural gas fuel supply. For the LP gas back up the recommendation, size for a propane storage station with air dilution system will be sized depending on the facilities total heating requirements. This would include a Horizontal Water Bath Propane Vaporizer combined with a Venturi Gas/Air Mixers that would be skid mounted, complete with surge tank sized appropriately to the demand of the facility. The generated mixed gas would be directly compatible with natural gas.

ECM - Set Plant Boilers to Produce Steam at 30 to 40 PSI

Boiler Steam is generated at a pressure between 90 to 110 psig, which supplies a pressure reducing station with two separate pressure reducing valves (PRV) to reduce the steam pressure for the two separate pipe runs. A smaller diameter pipe supplies 90 psig steam for cooking and laundry needs. A larger size pipe supplies 35 to 40 psig steam for all remaining thermal energy needs (space heating hot water, domestic hot water, steam for space heating…)

The steam is distributed from the central heating plant via underground piping throughout the facility inside the parimeter. These buildings use steam directly or indirectly for: building heat, domestic hot water, and steam cooking. While the plant is well maintained and efficient, including the recent upgrade of the coal boilers, the majority of HVAC equipment (AHUs, FCUs, Radiators, Unit Heaters and zone pumps) inside each of the buildings are original, in poor condition and is near the end of their useful life. The pneumatic control systems are either disconnected and/or no longer in operation. As the result of the inability to control and maintain the temperature in the space; many areas are experiencing overheating issues, which lead to windows being opened during the heating season. As a result, comfort is compromised and there is a significant amount of energy being wasted.

Based on the boiler log data and fuel input; ESG calculated that the existing central plant system thermal efficiency is at 75%. ESG performed a detailed breakdown of the steam used (domestic hot water and kitchen cooking) and compared to the benchmark data for correctional institutions. We estimated that the total distribution losses from the plant to the buildings is at 50%. These losses are: distribution piping, lack of controls, steam trap leaks, steam to hot water converters, make-up water, boiler blown down, and poor or missing insulation. In addition, the plant is required to operate year round; the boilers operate at part load during most of the non-heating season.
It was noted during our site visit, the laundry facility is no longer in use and the higher pressure steam is not required. With the implementation of this ECM, the boilers will be set to produce steam at 30 to 40 PSI, thus eliminating the waste of energy occurring through a pressure reducing valves.

- Adjust the steam drum pressure set point on the boilers to generate 30 – 40 PSI steam
- Lock and cap the existing 90-110 PSIA pressure reducing valve

ECM – Install Waterless Urinals:

ESG has evaluated the feasibility of replacing urinals with waterless urinals. This being a female institution, the volume of urinal use would be minimal with minimal savings.

©2018 Energy Systems Group, LLC

ECM – Implement Demand Response Program:

Demand Response (DR) Programs offer payments for end-users that make commitments to either shed load or operate on-site generation during times of grid congestion. The easiest way to participate would be to offer to run existing generators, where applicable, when called upon to do so by the governing electricity authority. SCI Muncy can also shed load by developing a sequence of operations to let control points drift or turn off equipment as needed.

ESG recommends a solution that automates the gathering of meter data required for Demand Response participants. One of the primary drivers of verifying load curtailment is based on the hourly meter data at the site. Timely verification of meter data used for measuring the curtailment amount is critical. The objective is to provide interval meter data from SCI Muncy buildings in order for the system operator to see on a real time basis the data that was collected for each of building's load drops. The current Demand Response Programs provides end users a revenue stream for reducing electricity consumption when either wholesale prices are high or the reliability of the wholesale electricity grid is in jeopardy. Although these programs have enabled end users to become more competitive in their respective industry by allowing them to manage their costs, grow their load in a smart manner, negotiate better retail rates, and offset or defer distribution upgrades, it is difficult for many end users to accurately forecast when the system needs them the most.

This ECM would need to be further refined in the IGA phase. Base on the response to question 17 of Bulletin No. 4; "SCI Muncy does not recommend the DR program due to aging generators and equipment.

ECM - Install Boiler Economizer and Blowdown Heat Recovery System

The boiler plant has a blowdown storage tank where boiler blowdown water is collected, tempered to a lower temperature with cold water and then discharged to the sewer. Thus, the blowdown heat is wasted as well as a large amount of domestic water used for tempering. The boiler has a stack gas economizer installed that developed a leak and has been isolated and not operational. The operating stack temperature is over 400 deg. F. all the time. Stack temperatures over 250 deg. F is a sign that excess heat is carried within the flue gases; thus combustion fuel is wasted through exhaust flue gases.
With the implementation of this ECM, the blowdown heat will be recovered as a first preheat stage of boiler make-up water. Then the exhaust flue gas heat will be recovered as a second preheat stage of boiler make-up. Blowdown and flue gas heat losses can consume up to 25% of input fuel used. With the implementation of this ECM, 5% to 15% of the input fuel energy can be saved along with the amount of cold water used to temper the blowdown stream.

- Supply and install a new blowdown heat recovery unit to recover blowdown heat and preheat boiler make-up water as 1st preheat stage
- Supply and install a stainless steel boiler economizer to recover flue gas heat and preheat boiler make-up water as 2nd preheat stage

ECM - Install VFD's on Boiler Feed=water Pumps

The boiler plant has two (2) constant-speed feed-water pumps with standard ON/OFF control. With the implementation of this ECM, the steam system will quickly and smoothly respond to any sudden steam load variations. The steam header pressure will provide the appropriate quantitative feedback for the feed-water flow needed; thus reducing the pump energy at low loads.

- Supply and install a pressure transmitter for VFD control
- Install a new VFD for each of the existing two (2) feed-water pumps

©2018 Energy Systems Group, LLC

ECM - Condensate System Inspection and Evaluation

ESG believes that not only are steam traps a sources of energy and equipment losses, but the entire condensate system is as well. As part of the IGA, ESG will include a comprehensive condensate system inspection. This evaluation will help ensure that condensate system is functioning properly and the facility is capturing as much condensate return as possible to save on both energy and operational costs. It was noted that the East loop is gravity fed back to the heating plant. This line has a low point of approximately three feet where condensate is collected and held until it reaches the step up height to allow it to return to the boiler plant. This is very inefficient and causes sludge problems for the condensate and feed water. It was noted that the plant did not have a condensate storage tank. This tank would be highly desirable as a collection point for all of the condensate, retaining heat and a volume of condensate water where the make-up water can be added allowing for a constant supply.

ECM – Mechanical Insulation

There where areas where exposed heating and hot water lines had missing insulation. ESG will conduct facility wide system surveys to identify areas where the insulation is missing or is inadequate and include those findings in our Investment Grade Audit.

ECM – Decentralization of Heating and Hot Water Systems

It is common in correctional facilities to install centralized heating and/or domestic hot water systems. The benefits appear to be more convenient maintenance and reduced equipment. Inherent in the design is more parasitic losses from stand-by, distribution, and operation to serve the zone of highest demand. Over time, as the equipment ages, these losses increase and maintenance and repair cost escalate. Even with the more frequent replacement of small units, the life cycle cost of a decentralized system is better. A good example is a steam boiler system feeding steam to different areas such as at the SCI Muncy facilities. A steam boiler plant requires more maintenance and water treatment than a simple hot water heater. The steam traps need at least annual repair and replacement. And the energy consumption of the steam plant will be significantly higher.

ECM – Domestic Hot Water Replacement

Replacement of Domestic Hot Water (DHW) heating systems: Consideration of on-demand tank-less solutions and/or implementation of stand-alone heaters when main boilers are used for summertime DHW supply. Domestic hot water is currently generated via indirect steam converters. If part of the proposed decentralized hot water heating conversion and the new natural gas line inside, ESG would recommend installing new condensing heaters to generate hot water. The new gas line will be installed via underground piping and connected to the newly proposed heaters. As part of the DHW and DDC upgrades, ESG will investigate of lowering the temperature of the DHW. ESG proposes to install new hot water condensing boilers and new gas line via underground piping. The existing steam heating plant will be de-coupled and abandoned in place. All of the steam equipment (condensate lines, traps, central plant) will no longer be needed or maintained. As the result of part of the heating conversion, SCI Muncy will benefit from getting mostly newer HVAC equipment, added cooling in several areas to replace existing windows AC units. The new boilers would substantially improve the operating efficiency for the heating of the buildings, and improve the reliability of the heating system as well.

©2018 Energy Systems Group, LLC

De-Centralize Heating and Domestic Hot Water heating

- Install condensing boilers and domestic hot water boilers throughout the facilities
- Install new underground gas piping
- Explore combining buildings as part of the same hot water boiler systems for system redundancy
- Replace and Modify DHW pumping and piping appropriately
- The proposed heating boilers are to be installed in a manner that would allow the domestic hot water boiler to "backup" the building heat boiler in an emergency situation.
- The domestic hot water system will incorporate a 3-way thermostatic mixing valve, to ensure that domestic hot water is not distributed at elevated temperatures.

ESG would propose to de-couple the existing central heating steam plant and steam distribution system and replace it with new de-centralized gas fired heating equipment throughout the facility. The new equipment will provide both building heat and heat for domestic hot water production. The existing steam heating plant will be de-commissioned and abandoned in place.

ESG designed the construction schedule so that most of the heating equipment work will be installed and made operational during the non-heating season, minimizing interruptions of daily operations and inmate comforts. Any heating that may be required from the heating plant can continue to be furnished with the gas fired boilers during construction. As part of the redundancy in the fuel handling system, ESG could install a propane air mixing system as a backup fuel in case of an interruption to the natural gas service. Once the propane and air are mixed, it forms a homogenous mixture that can be used as a direct replacement for natural gas combustion application. This system can be placed in live back-up so that they take over upon falling pressure, or they can be operated manually. In either case, a Propane-air backup system also may allow SCI Muncy to benefit from an interruptible Natural Gas rate while relying on environmentally clean fuel sources.

Detailed Scope of Work

- New condensing hot water boilers to replace the existing central plant
- The new gas line from the proposed main to be distributed throughout the facility
- Install a new propane tank and air mixing station near the existing heat plant and connect to the new gas line.
- The existing steam heating system in each of the buildings will be replaced and converted to hot water (AHUs, FCUs, Radiators & Unit Heaters, DHW and steam cooking) and direct gas fired (laundry dryers and kitchen) equipment.
- Direct/indirect gas fired units will be installed where there is a more economical than hydronic system
- Primary and zone pumps will be replaced with new units
- New Direct Digital Controls on HVAC equipment
- Install new gas meters at each boiler plant location for monitoring purposes
- Explore combining buildings as part of the same boiler systems for redundancy or cross connect heating loops to provide heating redundancy and reduce capital costs and appropriately modify HW pumping and piping
- Replace/Convert existing AHUs, UHs and Radiators from steam coils to hydronic (i.e., HW coils) or replace AHUs with forced air indirect gas heating. The remainder of UHs and radiator conversion to HW stays intact
- Install new gas line to kitchen
- Convert steam cooking equipment to natural gas
    - Examine impact, if any, on fire-protection upgrade to an existing system
- Abandon existing central plant in place or potentially move to other SCI facilities

©2018 Energy Systems Group, LLC

Savings / Benefits:

- Significant reduction in fuel costs
- New HVAC equipment, building automation controls, domestic hot water, kitchen cooking equipment, will replace existing systems
- No longer require full-time operators for the high pressure boilers. The existing staff could be utilized to perform other maintenance purposes.
- Reduce significant steam distribution losses (long piping, steam traps, condensate receivers, Aerator blown-down, piping insulations, make-up water)
- No longer required to maintain steam traps, condensate receivers and all auxiliary equipment associated with central heating plant
- Domestic Hot Water will be generated at the building site.
- Reduce security vulnerability of the Central Plant
- Supply redundant fuel source and heating equipment for the facility.

ECM – Pump Motor Replacement

When completing pump motor replacements, the concept is to locate pumps which have low efficiency motors (less than 90%) of signicant size (greater than 5hp) that are operating most of the year. Once these pumps are identified, there will be notable cost savings by replacing the low efficiency motors with premium efficiency motors. Throughout ESG's on-site observations, it was noted that there were a limited amount of pumps which would be good candidates for motor replacements. Pumps observed were of less than 5hp, operating sporadically, or both. Therefore, this ECM was considered but was ultimately not recommended for inclusion due to poor economics.

ECM – Micro-Turbine Installation

The installation of a microturbine can be an attractive way to conserve energy through the means of cogenerating electricity, heat, and in some instances cooling. The concept is to consume one form of energy, often natural gas, to produce the other forms of energy at a lower cost than the price of each form of energy individually. This concept generally only pays back if there is a constant pathway for the cogenerated energy to travel. Such as a constant demand for electricity and heat. This concept can also be helped with energy rebates, if such rebates are available at the project location, or if electricity is priced quite high when compared to natural gas. This ECM was considered but ultimately there is not enough of continuous demand for electricity and heat to warrant the installation of a microturbine, Couple this with the low electric rates and the lack of rebates in Pennsylvania made the installation of a microturbine cost prohibitive in the opinion of ESG.

ECM – High Efficiency Transformers

All dry-type distribution transformers manufactured after January 1, 2007 in the US must meet the minimum energy efficiency standards outlined by NEMA TP-1-2002. The electrical distribution system at the SCI Muncy facility will be inspected to determine if these transformers meet today's standard. Using harmonic cancellation and K-Star transformers, peak power consumption can be reduced by at least 10%, operating costs will be lowered, more capacity will be regained for pending projects and achieve a short ROI. Existing and projected harmonic power quality issues will be resolved with the installation of new transformers.

©2018 Energy Systems Group, LLC

ECM – Demand Controlled Ventilation

Demand Controlled Ventilation is a controls sequence that utilizes readings from a CO2 sensor to adjust the amount of ventilation air being brought into space. Typically, ventilation air dampers are set at a minimum position. That minimum position is determined by the maximum number of people that could be in the area served at any one time. On a typical HVAC system, this corresponds to a ventilation air damper position from 10% to 25% open. Demand Controlled Ventilation can reduce this minimum position to a point where only enough ventilation air is being brought into the building to make up for exhaust fans in restrooms or janitor closets. With Demand Controlled Ventilation, if the area being served only has a few people in it, then the ventilation air damper may not move from the new minimum position. Conversely, if space is full of people, then the Demand Controlled Ventilation system will modulate the ventilation air dampers to maintain a maximum CO2 set point. Demand Controlled Ventilation will save energy by reducing the outside air intake requirements of the HVAC system and will also improve the space environment by ensuring proper indoor air quality. The amount of outside air will need to be set properly to maintain American Correctional Association (ACA) standards.

ECM – De-stratification Fan Installation

Heated air is more buoyant than cooler air. In large volume spaces such as gymnasiums and cafeterias, air stratification results in the heating equipment operating longer than necessary to maintain comfort levels near the playing surface. In addition, the heat collected near the ceiling provides more motive force for heat transfer out of the building through the roof. To reduce energy loss and improve comfort to the occupants, de-stratification fans can be installed where ceilings are high enough for a positive energy impact to your facilities. In addition to the reduced heating energy used, these fan installations will allow your staff to maintain a more comfortable environment during the warmer periods of the year by causing better circulation of air.

ECM – Solar Heating Systems:

All correctional facilities use large amounts of hot water. Installing a domestic hot water solar heat system to supplement or preheat the domestic hot water could reduce the amount of energy needed to supply hot water. The solar array system would preheat or supplement the existing hot water system. This would leave the facility with a redundant hot water heating system which would reduce the load placed on the boilers and water heaters. This will reduce the operations and maintenance costs for the boilers. The existing water heaters will remain in place, or newer more efficient heaters installed, to be used during days of low or no solar availability.

ESG's correctional staff have worked directly with several State Department of Corrections agencies in an attempt to develop sustainability programs that can work in correctional settings. Drawing from that experience, ESG has determined that it appears that the most favorable alternative energy system available to corrections would be solar hot water generation. Being that the systems services a correctional facility, several obstacles need to be addressed prior to solar heat being considered for use for correctional facilities.

1. Constant heat generation cannot be guaranteed by a solar heat system. Solar should only be considered as a secondary system which can affect the sizing of the system for the facility.
2. The type of solar collectors needs to be determined, both panel and vacuum tube solar collectors should be considered. Based on the correctional site location, will determine which system is best suited for that facility.
3. The security level of the facility needs to be considered along with the availability of roof space and age of roofing. Some facilities want to maintain a clear vision of site for building roof tops. Installing solar will on roofs will hinder the line of site.
4. Age of roofing. If solar systems are being considered on roofs of buildings, the age of the roofing needs to be determined and discussions following to determine if the roofing should be replaced prior to solar installation.

©2018 Energy Systems Group, LLC

5. Determine whether or not natural gas nominations or purchase costs will be affected with solar installations. As part of ESG's investment grade audit, all factors for solar installation will be considered, including the security aspect, amount of panels, system engineering, structural engineering, the facilities affect for fluctuating gas volumes, etc., to be discussed with the DOC to determine if this is a viable option.

ESG recommends exploring installing solar thermal systems for the boiler makeup water at the heating plant. The proposed systems will provide pre-heating the makeup feed water to the boilers.

ECM – Electronic Water Softener

It was noted that the existing water softener at the heating plant is in good condition and maintaining the chemical balance as required. However, over time the water softener system will require preventive maintenance to kept it in optimal condition. With ESG experiences, the majority of the DOC facilities have water that is either hard or extremely hard. ESG, being a complete vendor neutral company, will investigate the use of an electronic water softener system SCI Muncy. This newer technology system has been installed and used in place of traditional water softeners and has been proven to work in other large state correctional facilities. Some of the benefits associated with this type of system are with the overall operational cost savings for the facilities and with the reduction of maintenance time when compared with the general operational requirements of typical water softener systems. Some of the benefits are:

- Prevents and removes hardness
- Makes discharge water viable to be reused/claimed, no sewer costs
- Reduced energy consumption by up to 50%
- Reduced blow down or back washing cycles
- Reduces costs associated with chemicals and salts
- Eliminates Sally Port gate operations for salt deliveries and maintenance
- Increases the Security of the Facility

ECM – Energy Coach

ESG understands that changing the correctional culture and to establish new habits in a correctional setting may be difficult to accomplish due to security concerns. Newer technology is now available that can be used to enhance the safety, security and facility comforts for the entire facility, yet it will also be used to reduce energy consumption. ESG can deploy actual correctional experienced personal as an Energy Coach who understands the corrections culture and industry as a whole, and will maintain the facilities primary task of safely housing inmates and supplying the necessary medical, educational, programs, living comforts, etc., for all staff and inmates working or living in the facility. The Energy Coach will work directly with line staff to educate the facility for all equipment and operations of the facility, so as to assist in the total understanding and support of both existing and newly installed technologies throughout the facility. ESG strongly feels that by training and educating facility staff as to the use and parameters of equipment and technologies, it will help ensure a successful project.

ECM – Energy Star Award Program

Once selected to complete the recommended energy conservation measures from the investment grade audit, ESG, as part of the traditional guarantee measurement and guarantee process, will enroll SCI Muncy into the EPA/DOE Energy Star program. The Energy Star Program has been developed by the EPA/DOE to reduce national energy dependency and pollution emissions. To achieve these ends, the program entices building owners to implement energy saving projects. These projects may include lighting, controls, HVAC replacement water savings devices, etc. ESG will perform an Energy Star analysis for each building at SCI Muncy. The Energy Star Benchmarking Tool provides a 1-100 ranking of a building's energy performance relative to the national building

©2018 Energy Systems Group, LLC

market. A higher SEP indicates a more energy efficient building. A score of 75 or higher is needed to qualify for the Energy Star label. ESG will prepare the information needed – utility bills and building information – for submittal to the EPA through our EnergyCAP program. ECAP has a partnership with the EPA and Portfolio Manager and their program will assist in the information and submittal process. After the original benchmark score, the data can be submitted monthly to see how the benchmark changes and also to renew the Energy Star rating on an annual basis. The decal will state the year in which the Energy Star rating was earned. Before the building can be Energy Star designated it must be audited by a third party engineer. As a participant, SCI Muncy can expect free press, on both the local and national levels, to promote the positive effects of the project.

ECM – Geothermal

Correctional facilities can be good candidates for geothermal systems. Geothermal being considered an alternative heating system usually requires both a heating load in the winter along with a cooling load in the summer to make it qualify for a possible energy conservation measure. There are generally two types of geothermal systems which can work at correctional facilities. These are horizontal fields or vertical wells. Either case, the systems can work. ESG will take a conservative research approach for the use of a geothermal system. Due to the higher heating demands usually required to operate correctional facilities, the number of heat coils or amount of wells required to meet the needs of a correctional facility will likely make this Energy Conservation Measure too costly to include for the whole site heating system. ESG has found that the primary use of a geothermal system may only exist for SCI Muncy's Administrative and possibly the Education buildings where there are both heating and cooling loads available to help pay for the systems. ESG will evaluate the possible use of a geothermal system for each correctional building and supply recommendations that will include the possible use of geothermal heat as supplemental heat.

ECM – Replacement of Kitchen and Laundering Systems

Replacement of kitchen and laundering systems with certified energy efficient units that are suitable for correctional environments. *This shall include conversion from electric or steam to natural gas as practical.* Most of the existing kitchen appliances are powered by 90 psig saturated steam. This arrangement requires a fairly extensive network of steam lines and steam traps. During the site visit, ESG engineers noticed failed and leaky traps that resulted in steam and condensate losses. Cooking with this type of fuel is also more expensive than natural gas. Since a new gas line will be installed, a substantial amount of energy can be saved by replacing the steam-powered appliances with new direct gas-fired units. This ECM will allow for the replacement of steam-powered kitchen appliances with new direct gas-fired Energy Star units and the installation of new control packages for kitchen exhaust & make-up air fans. Fans motors will be upgraded to premium-efficiency units.

- Kitchen Appliances
  - supply and install new gas-fired Energy Star models:
  - kettles
  - pressure cookers
  - baking ovens
  - electronic grease trap with oil draining pump
  - air-cooled ice machines
- Laundry Appliances
  - Supply and install new gas-fired Energy Star industrial rated clothes driers

©2018 Energy Systems Group, LLC

Benefits

- Displacing a higher cost fuel with a more economical fuel source will yield cost savings.
- Replacing old equipment such as the large baking ovens will alleviate maintenance concerns with replacement parts as well as eliminate the risk associated with operating outdated equipment.
- Many professionals favor cooking with natural gas over electric heat for a variety of reasons such as more stable temperatures, quicker warm-up and cooking time, and improved controllability of temperatures.
- The kitchens were examined to determine if there was any opportunity for cost savings by converting any of the kitchen equipment to natural gas or replace other inefficient equipment with newer equipment. Switching to natural gas from other heat sources such as boiler plant steam or electric and lower the overall cost per unit of energy used.

ECM – Replace Windows

Some window replacement is included in the proposed project. Other windows should be investigated also. Old single-pane windows can be replaced with new dual-pane windows and thermally broken frames. Current technology allows for tremendous improvement in both glass and unit make-up of frame construction. The glass used will be a sealed, dual-pane, insulated unit, which more than doubles the energy insulating values of the existing single-pane windows. Frame construction provides for superior resistance to air and water infiltration and includes a thermally broken design, which incorporates a nonconductive metal that is placed between the inner and outer pieces of the frame, effectively stopping energy loss. The design virtually eliminates the hot or cold feeling of the frames as well as puddles of condensation. Replacement of single-pane window systems with Low-E double pane units that are suitable for use in a correctional environment: The heat loss and gains occur due to low R-value of the windows will be improved through their replacement with energy efficient double pane low-e windows. Additionally the rate of infiltration that occurs due to the leakage around the frames is also a major cause of energy loss.

The upgrade will result in substantial savings and improved comfort in those buildings. ESG proposes the installation of new energy efficient, double-paned windows to reduce infiltration, infrared and conductive heat losses. Overall, through the implementation of this measure, the complex will reduce its heating fuel usage and air conditioning costs each year. Many of the exterior doors are in poor condition and are recommended as part of this recommendation.

ECM – Identify and eliminate infiltration and ingress (I&I)

It was noted that the facility is paying for more sewage than the amount of water being supplied to the facility. The amount is approximately six percent more. Usually the amount of sewer is less than the amount of water to the facility due to evaporation, gardens, etc. Inflow and Infiltration (I & I) can be effectively evaluated upon completion of water system metering. If the water usage and the amount of flow discharged from the wastewater treatment plant are approximately equivalent, the amount of I & I is insignificant.

Typically, we would recommend the damaged pipes be repaired, inspect the laterals to cell blocks or locate storm water connections, which could provide a large source of extraneous water. Additionally, smoke testing should be performed to detect additional locations for storm water entry. Damaged laterals should then be repaired and storm water directed to designate storm water discharge points. The reduction in unnecessary flow would then lower the sewer cost for the facility.

©2018 Energy Systems Group, LLC

Meter water usage: A big prospective saving would be to reduce water use. It was noted that SCI Muncy used approximately 168,000 gallons of water per day. This equates out to approximately 120 gallons per inmate per day. A goal of 75 gallons per day per inmate is recommended. We would recommend metering the water use and place meters at locations throughout the system and inside the buildings to estimate the unaccounted water loss and locate areas of significant water usage. Analyze the data to determine the largest source of water use. Water savings devices such as correctional grade flow restrictors, pressure reducing or pressure limiting valves, and spring loaded valves, may then be installed where suitable. Water conservation practices should be encouraged to all users.

Metering would also help to determine leakage in the distribution system, which ultimately infiltrates the sewer system. Reducing the usage of the system would eliminate the amount of extraneous flow processed at the wastewater treatment plant, and could potentially reduce the sewer of water from the town of Muncy.

Evaluate the system pressure: Reducing pressure in the system would reduce the amount of water leakage throughout the system. Water leakage in systems is greater as pressure increases. By reducing the system pressures with pressure reducing valves, system leakage can be reduced by 10%-15%. The reduction in water use would reduce the load to the wastewater treatment plant and would reduce the energy required to heat water.

Ozone

ESG recommends the installation of an Ozone system for all washing machines. When you introduce Ozone to the washing cycles, it reduces the use of hot water and chemicals used as cleaning agents for the laundry. With the use of an Ozone system, it has proven to extend the life of clothing and linens, which will help to reduce operational costs associated of the clothing and linen replacements. It also reduces the drying times required for the drying cycles. Ozone use also generates health and safety benefits for the facility. It kills bacteria's, including MERSA.

Laundry Loops

ESG recommends the use of Laundry Loops in place of the existing mesh bags. The use of mesh bags creates a heavy ball of clothing. Longer washing and drying times are required in an attempt to properly clean and dry the clothing located in the interior of the bag. These heavy balls of laundry cause extra wear and tear on both the washers and dryers. When soaked with water, these weighted balls tumble against the drums causing rollers and bearings to wear out prematurely. The use of Laundry Loops with sock snare allows the laundry to be attached together, has a name/number etc. associate to the loop for easy inmate identification and allows the laundry to fluff while washing and drying. This fluffing eliminates the balled laundry which allows for easier cleaning and shorter drying times, thus not only saving on operations and maintenance costs, but saving on utilities and lowering costs.

©2018 Energy Systems Group, LLC

ECM - Install Compressed Natural Gas Refueling Stations and Replace Fleets Vehicles:

The facility has a fleet of vehicles that includes diesel and gas-powered engines. With the implementation of the current project, a new natural gas line will be installed to supply gas to the facility. Currently, there is an on-site gas and/or diesel storage tank to supply fuel to the facility's fleet of vehicles. This ECM explores and presents a brief economic summary of a new Compressed Natural Gas (CNG) fueling station at the Muncy facility for its vehicles. The facility's existing fleet will be converted to, or replaced with, CNG-powered vehicles. This ECM will increase the facility's natural gas consumption, thus allowing for a lower gas rate. The ECM will also allow for substantial cost savings for vehicle fuel.

- A new Quick Fill CNG Fueling station will be installed at the facility
- The station will have large compressor as a lead unit and smaller compressors as lag and back-up units
- This ECM includes replacement of some of the facility's existing fleet.

Existing State Incentives

- For vehicles less than 14,000 pounds, Natural Gas Vehicle (NGV) grant program provides competitive grants capped at 50% of the incremental or conversion cost, up to $25,000 per vehicle
- Alternative Clean Energy (ACE) program provides incentives up to 30% of the fueling station's installed cost.

ECM – Security Systems

During the initial facility walk through, ESG was unable to view the facilities security systems. At this time we are unable to determine the exact condition of the systems, but from initial indications and from a distance, the systems did appear to be antiquated, and likely that repair parts will no longer be available for repairs.

With ESG's correctional back ground personnel working directly on this RFQ response, and ESG being a vendor neutral company, ESG may be able to assist the facility with possible system upgrades or replacements. Depending on the SCI Mancy's current needs, ESG could assist and include in their Investment Grade Audit system upgrades from companies such as DeTekion, Secure State (Creative Technologies), Gallagher, Senstar, etc. ESG can help select which system or systems works best based on the facility(s) needs. As an example of some of the technologies or upgrades now available to the SCI Muncy. Some or all of these conditions could be integrated into a security system. Basic control of field devices (doors, cameras, intercoms, etc.) are available from many vendors. Some vendor systems focus on operational and maintenance features that may provide the lowest cost of ownership over the life of your facility through:

i. Avoiding the necessity for expensive, unresponsive maintenance contracts. \
ii. It has been ESG's experience that some companies may only be concerned with getting through the warranty period without additional costs. Once the warranty is over, they would like to sell you a service contract or be required to make trips to a facility on a time and materials basis, costing the DOC excessive costs.
iii. Companies are now available that will focuses on maintenance software, combined with long lasting, simple hardware that can achieve the lowest overall cost of system ownership. Also, systems now can be maintainable by facility personal. Some security systems do not offer that benefit.
iv. New or Up-graded systems can reduce operations, maintenance, and training costs. Some newer systems can offer;
    - Dynamic touchscreen design allows officers to process events quickly
    - Eliminate DVR's for recordings.
    - The simplest operation available using panning graphics

©2018 Energy Systems Group, LLC

- Eliminates officer frustration
- Simple training – hours vs. days or week

v. v. Simple, longer lasting system hardware design and layout are now available for easier officer operation and technical staff to understand and maintain.

vi. Systems are now available that can provide complete ease of interactive operations with electronic

vii. New systems can allow for the facility staff to make the common system and software changes by the owner.

viii. Allows for easier event logging – configurable by the facility

ix. A standard product customized for your facility; not a one-of-a-kind system.

ESG can also provide all types of system integration. Besides the traditional security sub-systems, systems can now be integrated into any building automation sub-system that provides an interface; either IP-based, hard-wired, or legacy serial. For example, ESG could integrate to building management controls, lighting controls, power, or electronic water controls and provide annunciation as needed. As an example ESG combines vendor controls that could control lighting systems in a manner that would save on electrical costs and increase the security of the facility. As an example, ESG could configure the system to automatically turn on lighting in an area when an alarm occurs or when a sensor detects movement. ESG being a complete vendor neutral company can work with SCI Muncy staff and security companies to determine what system(s) would be best. Although security systems typically do not fall into the energy savings category, ESG's correctional staff has worked with several different vendors to integrate different systems into one centralized control system, usually monitored and maintained in the control center. As another example, ESG helped design a lighting system that also had alarm systems on them that controlled perimeter lighting and set off a control center alarm when people approached the perimeter fence from either side of the fence. This helped control the introduction of contraband into the facility.

Potential Security upgrade measures consist of the following:

A. Window Film: ESG will furnish and install Madico Safety Shield 1500 (15 mils) clear anti-intrusion security window film on all exterior perimeter glazing of the buildings. The film shall be tested and certified by Underwriters Laboratories for the purposes of intrusion resistance, with a UL-972 testing certification. This measure may also be considered an option to remove the existing window protection units, which would change the aesthetics of the building.

B. Security Doors: Provide new security doors consisting of aluminum or hollow metal frames with clear insulated glazing.

C. Intrusion System: An intrusion system consisting of sensors on all exterior doors along strategically placed motion sensors.

D. Access Control System: An access control system with access cards used to gain access to doors, and electric strikes.

E. A Visitor Management System: A visitor management system with ID badge scanning capability for authorizing credentialed visitors, documentation and imaging of identification cards, and submission of visitors' information through a national sex offender screening database shall be provided, integrated with the access control system.

F. Security Camera System: An IP based Security Camera System consisting of a network of high quality megapixel detailed security cameras with the video feed stored in a high quality computer

©2018 Energy Systems Group, LLC

server and offered for access by authorized users in an easy to use interface. Camera locations that match up with an access controlled door location should allow for integration with the access control system.

G. Visitor Intercom System: A visitor intercom system with a button activated station at secured door locations on the outside of the facility shall allow a visitor to page a master station location. This system is to include two-way communication as well as a video feed showing a camera view of visitors at the door.

H. Duress Alarm triggers (marked PB- panic button) represent a single button trigger to alert the Police Department or other parties as determined by facility officials that an emergency situation has occurred.

I. Cameras & Video Management Software: The Video Management Software shall be a solid core integration with the access control system shall providing a link between access control events and video footage through the same interface. Cameras shall be Pan Tilt Zoom with 28X optical zoom or fixed lens cameras with full HD with WDR.

ECM –Biometrics Technology

By definition, Biometrics is the science and technology of measuring and analyzing biological data. In information technology, biometrics refers to technologies that measure and analyze human body characteristics, such as DNA, fingerprints, eye retinas and irises, voice patterns, facial patterns and hand measurements, for authentication purposes. ESG can incorporate the latest correctional technology available for use in correctional facilities. The advantage of utilizing one or more forms of a “biometric” systems will not only help to increase the facilities security, but depending on the systems being considered, can also help to reduce the facilities operational costs. If desired, ESG will assist the facility(s) in determining which system or systems could be used in each facility to obtain the most cost savings for the Department of Corrections. As an example, a facilities’ existing controls consist of hardwired panels for door and intercom control. These panels provided “stand alone” control for specific areas of the facility. There is no ability to take over control of these remote areas from a central location. Some of these areas also have local CCTV capabilities. ESG will bring on site one or more of the leading prison security firms to investigate the use of reliable identity authentication systems (biometrics) along with new electronic control equipment for doors and intercoms at control locations. These control locations could also be networked together to allow remote device monitoring and control from the Central Control. This type of centralized monitoring and control may allow for local staff to be redeployed and used in other areas as needed, saving on operational costs.

ECM – Cell Phones

One of the most reoccurring and problematic security breaches has been the introduction of cell phones into prisons. If needed, by the SCI Muncy , ESG can supply information and guidance in the selection of cell phone detection systems or even cell phone jamming systems. This information may be incorporated into ESG’s investment grade audit and funded through this program. There would not be any energy savings associated with this measure and may be considered a Capital project. An investigation into the legal use of cell phone jamming systems needs to be completed to ensure that the State will not be breaking Federal Communications Commission laws.

©2018 Energy Systems Group, LLC

ECM – Recidivism

ESG's correctional staff maintains an active role within the correctional industry. This allows ESG to obtain and maintain a corrections industry leading role for all new technologies and training programs. As a benefit of being so active in corrections on a national scale, ESG can easily offer assistance to state correctional agencies interested in developing training programs for inmates, either through state correctional industries or through department or facility training programs. All training programs are geared toward supplying inmates with life learning skills which can help them obtain meaningful employment once released. If desired by the DOC and as part of the Energy Performance Contract, ESG can help develop and incorporate inmate training programs into the EPC contract. Some of these programs could be directly related to alternative energy, sustainability, or established Recidivism programs.

ECM - Prisoner Rape Elimination Act (PREA)

ESG can assist the DGS and DOC with correcting or upgrading any physical plant or security upgrade required to meet the new Prisoner Rape Elimination Act which was signed into Federal Law in 2003. The law limits cross gender viewing and require correctional facilities to implement policies and procedures that will allow inmates to shower, perform bodily functions and change clothing without nonmedical staff of the opposite sex to view their breasts, buttocks, or genitalia areas. To adhere to this law, the facility may be required to complete physical plant changes in shower areas, bathroom facilities, housing units, etc. This may also require relocating camera systems or install additional cameras, to/ from different locations throughout the facility, to help eliminate the line of site to the areas outlined above. Although any physical plant or security change would not be considered an energy savings measure, ESG may be able to assist the facility in completing any change deemed necessary and may also be able to cover the changes under the performance contract.

ECM- Generators

As part of ESG's Investment Grade Audit, ESG will investigate the facilities standby or emergency generators for proper operation and documentation to help ensure that the facility complies with the American Correctional Association (ACA) standards, and will investigate the feasibility or need to install more electrical capacity, computer monitored peak shaving programs, demand charge reduction software, automatic switch gear controls, etc., to further reduce the facilities operational costs Correctional facilities offer utility companies a very stable and predictable electrical load demand. This helps the utility company predict the amount of electricity needed to be supplied in a region. When weather changes or industrial companies increase production, this can create periods of electrical short falls, sometimes called brown outs. To offset this, the local utility company sometimes offer rebates and/or incentives to facilities that can self-produce or reduce electrical demands from the electrical grid. Facilities that have that capability can realize substantial operational savings. In general, some utility companies offer incentives to join programs that can help reduce electrical use during high electrical use. Facilities with generators may also be able to use their electrical generation capabilities to help curb demand charges. When selected to complete an investment grade audit, ESG will include studies and research for additional electrical generator capacity options along with automatic controls and upgrades, for the purpose of reducing the facilities electrical charges by operating generators to pick up the electrical loads during high use times, or use these systems to curb demand charges. Often times the National Electrical Code or State/County Electrical Codes do not recognize the unique needs to maintain electrical power in certain locations inside correctional facilities. ACA standards also may affect the facilities operational requirements. Generators labeled as standby generators or generators labeled as emergency generators can be treated differently and may have the capability to have different loads placed on them. ESG will investigate all of these requirements to help determine which rebates or incentives are available and will also investigate and offer recommendations to the SCI Muncy to meet their requirements and to help save on operational savings.

©2018 Energy Systems Group, LLC

SCI Muncy is an excellent candidate for enrollment in PJM's Demand Response Program since there are 2 Generator sets available as backup power. In addition, the recommended Building Automation Systems, Solar PV, and Lighting Control Technologies will be integrated into the FADRS software platform and advanced building controls, and then utilized to fully automate the Demand Response and provide optimal benefits in establishing the additional revenue to the Correctional. The program will call on the buildings to reduce its electricity typically 1-2 times per year, for usually less than 3 hours at a time. Entities we have worked with participate by resetting thermostats and reducing non-essential lighting; or turning off air-conditioning equipment and all but safety lighting; or activating full back-up emergency generation.

ESG recommends the FADRS® solution. FADRS® is a dynamic self-healing Smart Grid Technology solution implementing Artificial Intelligence software to allow fully Automatic participation in Demand Response programs even where participation had not been possible or posed productivity issues. An electrical grid is a network of technologies that deliver electricity from power plants to consumers in their homes and offices. A smarter grid is different in a few important ways. First, it uses information technologies to improve how electricity travels from power plants to consumers. Second, it allows those consumers to interact with the grid. Third, it integrates new and improved technologies into the operation of the grid. A smarter grid will enable many benefits, including improved response to power demand, more intelligent management of outages, better integration of renewable forms of energy, and the storage of electricity.

The Smart Grid is an automated electric power system that monitors and controls grid activities, ensuring the two-way flow of electricity and information between power plants and consumers—and all points in between. Up and down the electric power system, the Smart Grid will generate billions of data points from thousands of system devices and hundreds of thousands of consumers. What makes this grid "smart" is the ability to sense, monitor, and, in some cases, control (automatically or remotely) how the system operates or behaves under a given set of conditions. In its most basic form, implementation of a smarter grid is adding intelligence to all areas of the electric power system to optimize our use of electricity.

ECM – Compaction of Bulk Trash in Facility Waste Stream:

Many public facilities, including correction facilities, schools, hospitals, universities, convention centers, athletic arenas, etc. generate large volumes of trash on a fairly predictable basis. While large trash producers generally already use compaction of their waste, smaller individual facilities may only use a variety of sizes of "dumpsters" to collect their waste, which is then hauled away by their service company or a contracted hauler, such as Waste Management, BFI, etc. As public facilities' and businesses' traffic and business volumes ebb and flow, there is often a lag time in adjusting their waste handling requirements or equipment to their new requirements, leading to inefficiency either in the forms of too much capacity or too small equipment for their current needs. An audit of the facilities waste stream could be performed to analyze the current solid waste procedures of the facility and to determine if the cost can be saved by implementing and optimizing new solid waste disposal equipment and procedures.

ECM – Conduct Thermal Imagery: As an added innovation toward identifying energy savings opportunities, a facility-wide building and equipment thermography (passive infra-red) inspection could be conducted. The report will be analyzed by a certified thermographer trained in Building Science Inspections, and used to help identify equipment hot spots, unusual building situations, and energy loss areas.

ESG may conduct facility-wide building and/or equipment thermography (passive infra-red) inspections for the SCI Muncy facility. This inspection may include the facility grounds where underground utilities exist. A very few companies utilize Thermal Imagery as part of their strategy to complete Investment Grade Audits. ESG takes Thermal Imagery further.

©2018 Energy Systems Group, LLC

Because building and equipment use sometimes are different in correctional settings, ESG utilizes only a Certified Thermographer and Building Science Specialist to take thermal images, analyze those images, and then produce a report. This Certified Theromgrapher and past Building Construction Specialist has over twenty six years of actual correctional experience to draw from. This experience allows him the advantage of understanding the uniqueness of correctional buildings and their uses, along with the extended running times and demands placed on certain equipment throughout the facility.

ECM - Pennsylvania's Alternative Energy Portfolio Standard (AEPS): Under this system, Solar Alternative Energy Credits (SAECs) can represent a potentially significant source of revenue for owners of qualifying PV facilities with a value determined by demand in the trading market. Eligible generators in Pennsylvania, including on-site generators, retain ownership of SAECs generated by their system until they voluntarily transfer them to another party. A generator remains eligible to generate SAECs for as long as the facility remains certified as an eligible generator. A SAEC may generally be used for compliance by a utility for the compliance year during which it was generated or the two subsequent compliance years.

ECM - Other Energy Efficiency Rebates and Programs:

Periodically, other rebates and incentives on energy efficiency projects may be offered through non-PPL Electric Utility programs.

Some of these programs and resources could include:

Database of State Incentives for Renewables & Efficiency
American Recovery and Reinvestment Act 2009 – Pennsylvania
American Taxpayer Relief Act of 2012
Pennsylvania Department of Community and Economic Development
Pennsylvania Department of Environmental Production Office of Energy and Technology

ECM - Renewable Energy Generation

Wind: In the IGA Phase, the possibility of installing wind turbines to generate on site power could be pursued. The specific type shall be determined during the study phase and based on feedback from the staff at SCI Muncy. Specific details regarding each of the three systems to be considered are included in the following sections.

ECM - Wind Turbines

ESG has a very positive approach toward alternative energy systems. Wherever possible, ESG researches and incorporates all forms of alternative or sustainable energy. As part of that portfolio, wind turbines are included to supply electricity generation to either the grid or facility itself. ESG's correctional staff has extensive experience investigating, working and incorporating alternative into correctional settings. What ESG has found is that correctional facilities, because of their need to maintain a secure perimeter, inmate population, and 24/7 operations, may require that special conditions be met prior to this energy conservation measure be considered. Listed below are the main considerations which need to be addressed and reasons why.

1. The facility should have a fairly large amount of vacant land available for the wind turbine site. This evaluation needs to be addressed to determine if enough space is available in case a wind turbine falls. It needs to have space to fall without the turbine being able to hit the facilities buildings, electrical supply lines, perimeter fence or road.

©2018 Energy Systems Group, LLC

2. Wind turbines in close proximity to housing units or administrative building can affect the working conditions of staff and living conditions for the inmates. A safe distance from the wind turbine blading to those locations should be far enough away to limit the constant soft swooshing sound of the rotating turbine blades.
3. The wind turbine location also needs to be considered to ensure that shadows from the rotating blading do not affect the inmates or staff. The constant flickering of the shadows can affect both staff and inmates. This may be eliminated if the facility has enough acreage to the north of the facility.
4. Correctional facilities usually have a very constant electrical demand. The electrical supplier may increase the cost of electricity to the facility if the facility installs wind turbines. This is due to the uncertainty of the amount of electricity being generated by wind and the need for the utility to ensure that they are producing enough to supply the facility as needed. The facility will not be a constant stable load and the utility may view their power supply as being on standby which may affect the rate structure. During the investment grade audit, ESG's correctional staff and engineers will meet with DGS, DOC central office staff and SCI Muncy location to discuss wind turbine installations. If deemed feasible from a correctional standpoint, ESG will then collect historical wind studies and meet with the local utility companies, etc., and begin the process to determine if wind generation is feasible for SCI Muncy.

ECM - Grants and Incentives

ESG will work with the Department of Corrections central office along with DGS and SCI Muncy independently, to apply for applicable Grants and Incentives available from the various Electric Power and Gas utilities, along with the State and Federal agencies. ESG will be responsible for the application forms and "paperwork" required for the available incentives. In addition to the prescriptive or "special" energy incentives, ESG will work with Department of Corrections to apply for custom incentives (energy savings measures that may not fit into a specific or prescribed category). All custom incentives, if available, usually required pre-approval and may require further information along with pre- and post-monitoring. Due to the dynamic nature of the possible incentives available, ESG will need to review the utility incentive program for applicable energy conservation measures. In the past, grants and incentives have also been available from state and federal agencies for renewable energy systems (wind, solar, bio fuels, and alternative fueled boilers.) These programs, though still available, are being re-evaluated and will most likely have limited funding or more stipulations for qualifications. When the GESA energy program is implemented through ESG, the funding programs available will be evaluated by ESG to determine what all possible refunds or grants will be available. During the Investment Grade Audit and due to the uncertain nature of incentives and grants, ESG will not include these savings in any energy analysis or cost savings measures supplied by the Investment Grade Audit, unless directed to do so by the DOC Central Office. Potential incentives and grants will be investigated and potential grants reported for information purposes only.

ESG will work with each utility to maximize and apply for any available rebates or tax incentives. ESG will also work with the PANYNJ to explore all available markets for Renewable Energy Credits and Carbon Credits and assist in preparing analyses that demonstrate the financial model most beneficial to the Participant.

©2018 Energy Systems Group, LLC

On account of our knowledge and experience with Utility and State Incentive programs, we have secured millions of dollars in rebate/incentive money and reduced project costs for our clients through:

- EPAct 179d Tax Credit
- PA – ACT 129 Rebate
- EPA grants
- EECBG funds
- CDBG grants
- NYSDEC grants
- PJM incentive programs
- State, local and private grant programs
- State and local tax credits
- Utility rebate programs
- Utility rate/class adjustment
- Utility supplier solutions
- NYSERDA

National/Federal Programs: The Energy Policy Act of 2005 (EPAct) was enacted to create immediate potential tax savings for building owners or architects and engineers based on the use of energy efficient improvements. Our corporate council is active in lobbying for EPAct and its renewal in Washington DC. Section 179D outlines the requirements for a maximum potential tax deduction of up to $1.80 per square foot of affected spaces that install (1) interior lighting (2) building envelope improvements (3) heating, cooling, ventilation, or hot water systems that reduce the building's total energy and power cost by 50% or more in comparison to a building meeting minimum requirements set by ASHRAE Standard 90.1-2001. We use the 179D Calculator for buildings in place before January 1, 2016 or another qualified software tool to model our projects. For buildings in place after January 1, 2016, we use qualifying software tools. NREL has Energy Savings Modeling and Inspection Guidelines for Commercial Building Federal Tax Deductions in place.

EPA: The Environmental Protection Agency has a grant programs such as Climate Smart Community. The EPA Title V permitting is taken into consideration when designing CHP systems. Emissions reduction incentives are always investigated.

Government grants and incentives will be researched and applications processed for applicable measures. Utility rebates are available and the energy conservation measures will be specified to maximize the benefits.

ECM - Variable Refrigerant Flow (VRF) System Installation in Common Areas

Variable Refrigerant Flow (VRF) systems are good in retrofit situations due to the ease of running smaller refrigerant piping in lieu of running full size ductwork. VRF systems were considered at the Administration, Educational and the Dietary building, in order to provide cooling to common areas (i.e. hallways, lobbies, office spaces). These systems would include terminal units (evaporators) connected to a common outdoor condenser unit. The VRF system is capable of heat recovery within the refrigerant circuit, thereby making them extremely energy efficient. For example, if half of the units require cooling and the other half require heating, almost no energy is required by the condenser unit because heat can be given up to and received by the refrigerant loop.

©2018 Energy Systems Group, LLC

ECM - Window Film

Solar control film reduces the undesirable effects of the sun that penetrate through clear, untreated glass its heat, glare, and ultraviolet (UV) radiation. The most widely used and most effective solar control films are constructed of two plys of polyester and contain a metalized layer. These films are assembled like a sandwich: the two ultra-thin plys of polyester are laminated to one another with a durable adhesive to form what appears to be a single sheet. One of the plys has a micro-thin layer of metal imbedded into it, which is securely trapped between the plys after lamination. The metal layer is the primary component that reflects the sun's heat and glare. Due to security concerns, the installation of Window films in air-conditioned spaces, south facing exposures, or areas of known overheating will be evaluated by ESG's correctional staff and SIC Muncy for application. At this time ESG does not recommend this ECM since many buildings do not have central air-conditioning. Our alternate to this ECM is weather-stripping the windows, and installing destratification fans to circulate air to improve the comfort.

ECM - Insulation

Although it was noted that the facilities insulation appeared to be well maintained, it was still noted that some areas throughout the SCI Muncy Facilities there where areas where exposed heating and hot water lines had missing insulation. ESG will conduct facility wide system surveys to identify areas where the insulation is missing or is inadequate and include those findings in our Investment Grade Audit. As an example, in some of the mechanical rooms, heating lines and valves were missing insulation and the valves do not have valve jackets, some equipment (heat exchangers) were not insulated.

ECM - Kitchen Garbage Disposer/Composting

Kitchen and dining hall food scraps are usually one of highest generation of garbage costs for correctional facilities. As part of ESG's Investment Grade Audit, ESG will work with SIC Muncy to determine the feasibility and success of incorporating a composting system for that facility, or if utilizing an energy efficient kitchen garbage disposer's suits that facility needs better, for the dispose of the food wastes.

This measure may not qualify as an energy savings project, but this type of project usually pays for itself by the reduction in garbage tipping fees. This type of project usually is very desirable for institutions as it not only pays for itself through tipping fee reductions, but depending on the type of composting system, it can reduce inmate idolism, and can save on the frequency of times trucks or maintenance vehicles need to enter the Sallyport to service the compactors.

ECM - Computer Power Management

Power management software is a simple, effective and economical solution to manage PC operating costs. Power management software complements the built-in power management features of Microsoft Windows® by providing:

- Centrally configured PC Power Management
- Comprehensive measurement of program impact and benefits
- Web-based, enterprise-wide reporting of PC usage and costs

©2018 Energy Systems Group, LLC

Power management software builds upon Windows to maximize savings while avoiding productivity losses by allowing simple management using familiar Windows tools. Deploying in a familiar environment dramatically reduces implementation time for rapid results. Power management software is a web-based graphical system that allows both IT and non-IT staff to monitor progress and identify areas for improvement. The management software is highly flexible and offers numerous power management policy options:

- Minimally intrusive to users and includes an optional user override tool
- Flexible policies per-user, per-workstation or per-group
- Mix/match techniques to work alongside user requirements and maximize productivity
- Built-in wake-up support for patch management, anti-virus scans, and updates
- Uniform solution for all supported operating systems

ECM - Facility-Wide Waste Stream Reduction

Once selected to complete recommended projects from the Investment grade audit, ESG can conduct a waste stream evaluation for SCI Muncy. The objective of the waste stream evaluation is to identify and categorize the amount and different types of wastes the facility generates. Once completed, a discussion with facility staff will take place outlining potential savings gained from the reduction of tipping fees, recycling and transportation costs. ESG understands that the SCI Muncy facility may lack sufficient space for a composting or recycling programs or that composting may be too costly to incorporate, but ESG will look into those possibilities in an effort to reduce operational costs and gain possible revenue for the individual facilities.

ECM - Inmate Television System

ESG understands the needs and restrictions of inmate television systems and can help provide updated system information and recommendations to the DOC if needed. ESG's Investment Grade Audit can include an in depth study of the entire Facilities, for the possibility of installing, upgrading or replacement of the inmate television system. The objective of the investigation of the inmate television system is to allow the DOC the capability to obtain the latest inmate television components available. ESG, through their correctional contacts, will be able to help the DOC review what their current capabilities are and assist with replacement systems or upgrades as needed.

ECM - Plug Load Management

Many facilities are closed for more hours than they are open. With plug-based load accounting for an increasing amount of energy consumption, effective plug load management is important for any facility or energy manager. Because these devices leverage the existing Wi-Fi infrastructure, SCU Muncy will have the ability to schedule devices, monitor energy use, and alter schedules or on/off status on the fly. Controls can be used to shut down non-critical electrical plug loads during times of no occupancy.

The purpose is to target plug load equipment that has parasitic energy loads that can be *eliminated* via plug load technology. These devices may already function with energy savings settings but still draw stand by loads. This is the load that plugs load management as the ability to do away with.

Over 100 districts, colleges, state/local governments and sporting venues save over 5 million kWh every year with Bert®. Using patented technologies and a facility's existing Wi-Fi network, Bert lowers standby plug load energy use by 65%. By simply plugging devices such as vending machines, printers, copiers, water coolers, AC units and projectors into the Bert® Smart Plug series or wiring circuits with the Bert® Inline Series, commercial buildings can remotely measure and control plug loads at both the device and circuit level for loads ranging from 120V/15A to 277V/20A.

©2018 Energy Systems Group, LLC

Bert® Control provides mass remote control so each building, group of buildings, device type or other group is scheduled off during nights, weekends and holidays when buildings are unoccupied. Bert® Measurement adds real-time measurement data and historical power usage by hour, day, month, year and user-defined time-periods. Bert® Threshold/Vend enables threshold-based control, preventing sensitive equipment such as compressors and projectors from turning off before the shutdown cycle is complete or the compressor turns off. Bert® Temperature uses high/low set point for temperature-based control as well as the ability to remotely monitor and record temperature data throughout a building.

Vending machine controls can be used to shut down vending machines during times of low or no occupancy. It is a simple plug-and-play device used to reduce energy usage by vending machines during unoccupied times. Similar to a lighting occupancy sensor, an occupancy controller powers down the vending machines when the area surrounding it is unoccupied. Once powered down, the occupancy sensor monitors the room's temperature and uses this information to automatically re-power the cold drink vending machines at one to three-hour intervals, independent of occupancy, to ensure that the vending product stays cold.

The occupancy sensor also monitors electrical current used by the vending machine ensuring the unit will never power down while the compressor is running, so a high head pressure starts never occurs. In addition, the current sensor ensures that every time the vending machine is powered up, the cooling cycle is run to completion before again powering down the vending machine. The savings from this measure have been included in the interior lighting savings.

©2018 Energy Systems Group, LLC

Building	Bldg ID	Location Detail	Notes	Pre Retrofit Fixture Qty	Pre-retrofit Description	Pre-Hours	Pre-Retrofit kW/Fixture	Post Retrofit Fixture Qty	Post Retrofit Description	Model Number	Post-Hours	Post Retrofit kW/Fixture	Existing kW	Proposed kW	kW Saved	Existing kWh	Proposed kWh	kWh Saved
Administration Building	1	Main hallway	4LT8 4' industrial wrap pendent mount	6	1x4 4-Lamp F32Watt T8, Industrial Hood Fixture	8760	0.116	6	REPLACE with new 39watt LED Surface Wrap Fixtures	PHILIPS 1SDL	8760	0.039	0.696	0.234	0.462	6,097	2,050	4,047
Administration Building	1	Basement locker	4LT8 2x4 troffer ceiling surface mount	4	2x4 4-Lamp F32Watt T8, Recessed Troffer	4200	0.116	4	REPLACE with a new 32watt 2x4 LED Volumetric Dimming Kit	MOBERN - RKDISE	4200	0.032	0.464	0.128	0.336	1,949	538	1,411
Administration Building	1	Basement locker	2LT8 4' wrap pendent mount	2	1x4 2-Lamp F32Watt T8, Surface Wraparound Fixture	4200	0.058	2	REPLACE with new 39watt LED Surface Wrap Fixtures	PHILIPS 1SDL	4200	0.039	0.116	0.078	0.038	487	328	160
Administration Building	1	hallway	2LT8 4' industrial pendent mount	5	1x4 2-Lamp F32Watt T8, Industrial Hood Fixture	8760	0.058	5	REPLACE with new 39watt LED Surface Wrap Fixtures	PHILIPS 1SDL	8760	0.039	0.290	0.195	0.095	2,540	1,708	832
Administration Building	1	hallway	22w cfl twist	4	22 Watt CFL Bulb with E26 Base	4200	0.022	4	RELAMP with a 9watt LED A19 Lamp	SYLVANIA - A19	4200	0.009	0.088	0.036	0.052	370	151	218
Administration Building	1	hallway	emergency 1' drum w/ frosted lens	3	18 Watt CFL-PL 2pin Lamp, Cylinder/Drum	4200	0.018	3	RELAMP with a 8watt LED PL (Ballast Bypass) Lamp	KEYSTONE - KT	4200	0.008	0.054	0.024	0.030	227	101	126
Administration Building	1	hallway	LED drum	2	Already Efficient	4200	0.000	2	No Work	N/A	4200	0.000	0.000	0.000	0.000	0	0	0
Administration Building	1	staff lounge	4LT8 4' wrap pendent mount	2	1x4 4-Lamp F32Watt T8, Surface Wrap Fixture	4200	0.116	2	REPLACE with new 39watt LED Surface Wrap Fixtures	PHILIPS 1SDL	4200	0.039	0.232	0.078	0.154	974	328	647
Administration Building	1	boiler room	emergency 1' drum w/ frosted lens	2	18 Watt CFL-PL 2pin Lamp, Cylinder/Drum	2000	0.018	2	RELAMP with a 8watt LED PL (Ballast Bypass) Lamp	KEYSTONE - KT	2000	0.008	0.036	0.016	0.020	72	32	40
Administration Building	1	boiler room	2LT8 4' wrap pendent mount	1	1x4 2-Lamp F32Watt T8, Surface Wraparound Fixture	4200	0.058	1	REPLACE with new 39watt LED Surface Wrap Fixtures	PHILIPS 1SDL	4200	0.039	0.058	0.039	0.019	244	164	80
Administration Building	1	boiler room	4LT8 4' industrial wrap pendent mount	1	1x4 4-Lamp F32Watt T8, Industrial Hood Fixture	4200	0.116	1	REPLACE with new 39watt LED Surface Wrap Fixtures	PHILIPS 1SDL	4200	0.039	0.116	0.039	0.077	487	164	323
Administration Building	1	boiler room	22w cfl twist	5	22 Watt CFL Bulb with E26 Base	4200	0.022	5	RELAMP with a 9watt LED A19 Lamp	SYLVANIA - A19	4200	0.009	0.110	0.045	0.065	462	189	273
Administration Building	1	boiler room	1LT8 4' strip	1	1x4 fixture with (1) F32watt T8 and (1) Normal Power Factor Ballast	4200	0.029	1	(1) 14watt LED-T8 Rotatable Lamps and (1) new electronic driver. Clean and drywipe existing fixture	PHILIPS - INSTANTFIT	4200	0.015	0.029	0.015	0.014	122	63	59
Administration Building	1	gym	275w 3/4 lens wallpack	6	250watt HID Flushmount Wallpack Fixture	4380	0.295	6	REPLACE with new 85 watt LED Flushmount Wallpack Fixtures at existing location	CREE - C-WP-A	4380	0.085	1.770	0.510	1.260	7,753	2,234	5,519
Administration Building	1	gym	emergency - cfl lamp in cylinder fixture ceiling mount	4	18 Watt CFL-PL 2pin Lamp, Cylinder/Drum	8760	0.018	4	RELAMP with a 8watt LED PL (Ballast Bypass) Lamp	KEYSTONE - KT	8760	0.008	0.072	0.032	0.040	631	280	350
Administration Building	1	#009 - security office	4LT8 2x4 troffer drop ceiling	17	2x4 4-Lamp F32Watt T8, Recessed Troffer	4200	0.116	17	REPLACE with a new 32watt 2x4 LED Volumetric Dimming Kit	MOBERN - RKDISE	4200	0.032	1.972	0.544	1.428	8,282	2,285	5,998

Building	Bldg ID	Location Detail	Notes	Pre Retrofit Fixture Qty	Pre-retrofit Description	Pre-Hours	Pre-Retrofit kW/Fixture	Post Retrofit Fixture Qty	Post Retrofit Description	Model Number	Post-Hours	Post Retrofit kW/Fixture	Existing kW	Proposed kW	kW Saved	Existing kWh	Proposed kWh	kWh Saved
Administration Building	1	#009 - security office	2LT8 4' industrial pendent mount	4	1x4 2-Lamp F32Watt T8, Industrial Hood Fixture	4200	0.058	4	REPLACE with new 39watt LED Surface Wrap Fixtures	PHILIPS 1SDL	4200	0.039	0.232	0.156	0.076	974	655	319
Administration Building	1	restricted area	4LT8 2x4 troffer drop ceiling	2	2x4 4-Lamp F32Watt T8, Recessed Troffer	4200	0.116	2	REPLACE with a new 32watt 2x4 LED Volumetric Dimming Kit	MOBERN - RKDISE	4200	0.032	0.232	0.064	0.168	974	269	706
Administration Building	1	restricted area	75w incandescent	3	75 watt Incandescent Screwin A19 Lamp	4200	0.075	3	RELAMP with a 12 watt LED A19 Lamp	SYLVANIA - A19	4200	0.012	0.225	0.036	0.189	945	151	794
Administration Building	1	stairwells	emergency 1' drum w/ frosted lens	10	18 Watt CFL-PL 2pin Lamp, Cylinder/Drum	8760	0.018	10	RELAMP with a 8watt LED PL (Ballast Bypass) Lamp	KEYSTONE - KT	8760	0.008	0.180	0.080	0.100	1,577	701	876
Administration Building	1	stairwells	2LT8 4' industrial pendent mount	2	1x4 2-Lamp F32Watt T8, Industrial Hood Fixture	4200	0.058	2	REPLACE with new 39watt LED Surface Wrap Fixtures	PHILIPS 1SDL	4200	0.039	0.116	0.078	0.038	487	328	160
Administration Building	1	stairwells	2LT8 1' circuline drum	2	12" round 76watt CFL Circuline Drum Surface mount Fixture	4200	0.076	2	REPLACE with new 15", 30 watt LED SECURITY Surface mount Round Fixtures at existing location	FAILSAFE - TR	4200	0.020	0.152	0.040	0.112	638	168	470
Administration Building	1	stairwells	LED drum	2	Already Efficient	4200	0.000	2	No Work	N/A	4200	0.000	0.000	0.000	0.000	0	0	0
Administration Building	1	#105	4LT8 2x4 troffer drop ceiling	7	2x4 4-Lamp F32Watt T8, Recessed Troffer	4200	0.116	7	REPLACE with a new 32watt 2x4 LED Volumetric Dimming Kit	MOBERN - RKDISE	2730	0.032	0.812	0.224	0.588	3,410	612	2,799
Administration Building	1	#105	T8 1' circuline drum	1	12" round 76watt CFL Circuline Drum Surface mount Fixture	4200	0.076	1	REPLACE with new 15", 30 watt LED SECURITY Surface mount Round Fixtures at existing location	FAILSAFE - TR	4200	0.020	0.076	0.020	0.056	319	84	235
Administration Building	1	#110	4LT8 2x4 troffer drop ceiling	9	2x4 4-Lamp F32Watt T8, Recessed Troffer	4200	0.116	9	REPLACE with a new 32watt 2x4 LED Volumetric Dimming Kit	MOBERN - RKDISE	2730	0.032	1.044	0.288	0.756	4,385	786	3,599
Administration Building	1	#143	4LT8 2x4 troffer drop ceiling	2	2x4 4-Lamp F32Watt T8, Recessed Troffer	4200	0.116	2	REPLACE with a new 32watt 2x4 LED Volumetric Dimming Kit	MOBERN - RKDISE	2730	0.032	0.232	0.064	0.168	974	175	800
Administration Building	1	#145	4LT8 2x4 troffer drop ceiling	20	2x4 4-Lamp F32Watt T8, Recessed Troffer	4200	0.116	20	REPLACE with a new 32watt 2x4 LED Volumetric Dimming Kit	MOBERN - RKDISE	2730	0.032	2.320	0.640	1.680	9,744	1,747	7,997
Administration Building	1	#145	4LT8 2x4 wrap pendent mount	1	1x4 4-Lamp F32Watt T8, Surface Wrap Fixture	4200	0.116	1	REPLACE with new 39watt LED Surface Wrap Fixtures	PHILIPS 1SDL	4200	0.039	0.116	0.039	0.077	487	164	323
Administration Building	1	#145	emergency 1' drum w/ frosted lens	2	18 Watt CFL-PL 2pin Lamp, Cylinder/Drum	4200	0.018	2	RELAMP with a 8watt LED PL (Ballast Bypass) Lamp	KEYSTONE - KT	4200	0.008	0.036	0.016	0.020	151	67	84
Administration Building	1	#132	2LT8 4' wrap pendent mount	5	1x4 2-Lamp F32Watt T8, Surface Wraparound Fixture	4200	0.058	5	REPLACE with new 39watt LED Surface Wrap Fixtures	PHILIPS 1SDL	2730	0.039	0.290	0.195	0.095	1,218	532	686
Administration Building	1	#132	4LT8 2x4 troffer pendent mount	2	2x4 4-Lamp F32Watt T8, Recessed Troffer	4200	0.116	2	REPLACE with a new 32watt 2x4 LED Volumetric Dimming Kit	MOBERN - RKDISE	2730	0.032	0.232	0.064	0.168	974	175	800

Building	Bldg ID	Location Detail	Notes	Pre Retrofit Fixture Qty	Pre-retrofit Description	Pre-Hours	Pre-Retrofit kW/Fixture	Post Retrofit Fixture Qty	Post Retrofit Description	Model Number	Post-Hours	Post Retrofit kW/Fixture	Existing kW	Proposed kW	kW Saved	Existing kWh	Proposed kWh	kWh Saved
Administration Building	1	#128	2LT8 4' wrap pendent mount	4	1x4 2-Lamp F32Watt T8, Surface Wraparound Fixture	4200	0.058	4	REPLACE with new 39watt LED Surface Wrap Fixtures	PHILIPS 1SDL	2730	0.039	0.232	0.156	0.076	974	426	549
Administration Building	1	#128	4LT8 2x4 wrap pendent mount	2	1x4 4-Lamp F32Watt T8, Surface Wrap Fixture	4200	0.116	2	REPLACE with new 39watt LED Surface Wrap Fixtures	PHILIPS 1SDL	2730	0.039	0.232	0.078	0.154	974	213	761
Administration Building	1	#126	75w incandescent	1	75 watt Incandescent Screwin A19 Lamp	4200	0.075	1	RELAMP with a 12 watt LED A19 Lamp	SYLVANIA - A19	4200	0.012	0.075	0.012	0.063	315	50	265
Administration Building	1	#123	2LT8 4' wrap pendent mount	2	1x4 2-Lamp F32Watt T8, Surface Wraparound Fixture	4200	0.058	2	REPLACE with new 39watt LED Surface Wrap Fixtures	PHILIPS 1SDL	2730	0.039	0.116	0.078	0.038	487	213	274
Administration Building	1	#123	4LT8 2x4 troffer drop ceiling	4	2x4 4-Lamp F32Watt T8, Recessed Troffer	4200	0.116	4	REPLACE with a new 32watt 2x4 LED Volumetric Dimming Kit	MOBERN - RKDISE	2730	0.032	0.464	0.128	0.336	1,949	349	1,599
Administration Building	1	---> women	4LT8 2x4 troffer drop ceiling	1	2x4 4-Lamp F32Watt T8, Recessed Troffer	4200	0.116	1	REPLACE with a new 32watt 2x4 LED Volumetric Dimming Kit	MOBERN - RKDISE	4200	0.032	0.116	0.032	0.084	487	134	353
Administration Building	1	#122	4LT8 2x4 troffer drop ceiling	1	2x4 4-Lamp F32Watt T8, Recessed Troffer	4200	0.116	1	REPLACE with a new 32watt 2x4 LED Volumetric Dimming Kit	MOBERN - RKDISE	4200	0.032	0.116	0.032	0.084	487	134	353
Administration Building	1	Lieutenant office	4LT8 2x4 troffer drop ceiling	4	2x4 4-Lamp F32Watt T8, Recessed Troffer	4200	0.116	4	REPLACE with a new 32watt 2x4 LED Volumetric Dimming Kit	MOBERN - RKDISE	2730	0.032	0.464	0.128	0.336	1,949	349	1,599
Administration Building	1	Control Center	2LT8 4' wrap pendent mount	2	1x4 2-Lamp F32Watt T8, Surface Wraparound Fixture	4200	0.058	2	REPLACE with new 39watt LED Surface Wrap Fixtures	PHILIPS 1SDL	4200	0.039	0.116	0.078	0.038	487	328	160
Administration Building	1	Control Center	4LT8 2x4 troffer drop ceiling	8	2x4 4-Lamp F32Watt T8, Recessed Troffer	4200	0.116	8	REPLACE with a new 32watt 2x4 LED Volumetric Dimming Kit	MOBERN - RKDISE	4200	0.032	0.928	0.256	0.672	3,898	1,075	2,822
Administration Building	1	#118	2LT8 4' wrap pendent mount	1	1x4 2-Lamp F32Watt T8, Surface Wraparound Fixture	4200	0.058	1	REPLACE with new 39watt LED Surface Wrap Fixtures	PHILIPS 1SDL	4200	0.039	0.058	0.039	0.019	244	164	80
Administration Building	1	main stairwell	emergency 1' drum w/ frosted lens	1	18 Watt CFL-PL 2pin Lamp, Cylinder/Drum	8760	0.018	1	RELAMP with a 8watt LED PL (Ballast Bypass) Lamp	KEYSTONE - KT	8760	0.008	0.018	0.008	0.010	158	70	88
Administration Building	1	main stairwell	75w incandescent	1	75 watt Incandescent Screwin A19 Lamp	4200	0.075	1	RELAMP with a 12 watt LED A19 Lamp	SYLVANIA - A19	4200	0.012	0.075	0.012	0.063	315	50	265
Administration Building	1	#202	4LT8 2x4 troffer drop ceiling	1	2x4 4-Lamp F32Watt T8, Recessed Troffer	4200	0.116	1	REPLACE with a new 32watt 2x4 LED Volumetric Dimming Kit	MOBERN - RKDISE	4200	0.032	0.116	0.032	0.084	487	134	353
Administration Building	1	#203	4LT12 4' industrial pendent mount	3	1x4 4-Lamp F40Watt T12, Industrial Hood Fixture	4200	0.144	3	REPLACE with new 39watt LED Surface Wrap Fixtures	PHILIPS 1SDL	2730	0.039	0.432	0.117	0.315	1,814	319	1,495
Administration Building	1	#203	2LT12 4' industrial pendent mount	2	1x4 2-Lamp F40Watt T12, Industrial Hood Fixture	4200	0.072	2	REPLACE with new 39watt LED Surface Wrap Fixtures	PHILIPS 1SDL	2730	0.039	0.144	0.078	0.066	605	213	392

Building	Bldg ID	Location Detail	Notes	Pre Retrofit Fixture Qty	Pre-retrofit Description	Pre-Hours	Pre-Retrofit kW/Fixture	Post Retrofit Fixture Qty	Post Retrofit Description	Model Number	Post-Hours	Post Retrofit kW/Fixture	Existing kW	Proposed kW	kW Saved	Existing kWh	Proposed kWh	kWh Saved
Administration Building	1	#203	4LT12 2x4 troffer pendent mount	1	2x4 4-Lamp F40Watt T12, Recessed Prismatic	4200	0.144	1	REPLACE with a new 32watt 2x4 LED Volumetric Dimming Kit	MOBERN - RKDISE	4200	0.032	0.144	0.032	0.112	605	134	470
Administration Building	1	#211	3LT12 4' wrap chain mount	2	1x4 3-Lamp F40Watt T12, Industrial Hood Fixture	4200	0.108	2	REPLACE with new 39watt LED Surface Wrap Fixtures	PHILIPS 1SDL	2730	0.039	0.216	0.078	0.138	907	213	694
Administration Building	1	#216	4LT12 2x4 troffer pendent mount	4	2x4 4-Lamp F40Watt T12, Recessed Prismatic	4200	0.144	4	REPLACE with a new 32watt 2x4 LED Volumetric Dimming Kit	MOBERN - RKDISE	2730	0.032	0.576	0.128	0.448	2,419	349	2,070
Administration Building	1	#216	4LT12 2x4 troffer ceiling surface mount	2	2x4 4-Lamp F40Watt T12, Recessed Prismatic	4200	0.144	2	REPLACE with a new 32watt 2x4 LED Volumetric Dimming Kit	MOBERN - RKDISE	2730	0.032	0.288	0.064	0.224	1,210	175	1,035
Administration Building	1	#217	4LT8 2x4 troffer drop ceiling	2	2x4 4-Lamp F32Watt T8, Recessed Troffer	4200	0.116	2	REPLACE with a new 32watt 2x4 LED Volumetric Dimming Kit	MOBERN - RKDISE	2730	0.032	0.232	0.064	0.168	974	175	800
Administration Building	1	#217	LED drum	1	Already Efficient	4200	0.000	1	No Work	N/A	4200	0.000	0.000	0.000	0.000	0	0	0
Administration Building	1	#220 - warden's office	emergency 1' drum w/ frosted lens	1	18 Watt CFL-PL 2pin Lamp, Cylinder/Drum	4200	0.018	1	RELAMP with a 8watt LED PL (Ballast Bypass) Lamp	KEYSTONE - KT	4200	0.008	0.018	0.008	0.010	76	34	42
Administration Building	1	#220 - warden's office	19w cfl in chandelier	6	19 Watt CFL Bulb in Chandelier with Candelabra Base	4200	0.019	6	RELAMP with a 4.5watt LED B10 Lamp	SYLVANIA - B10	4200	0.005	0.114	0.027	0.087	479	113	365
Administration Building	1	#220 - warden's office	60w incandescent in floor lamp	2	60 watt Incandescent Screwin A19 Lamp	4200	0.060	2	RELAMP with a 9watt LED A19 Lamp	SYLVANIA - A19	4200	0.009	0.120	0.018	0.102	504	76	428
Administration Building	1	#220 - warden's office	4LT8 2x4 troffer drop ceiling	8	2x4 4-Lamp F32Watt T8, Recessed Troffer	4200	0.116	8	REPLACE with a new 32watt 2x4 LED Volumetric Dimming Kit	MOBERN - RKDISE	2730	0.032	0.928	0.256	0.672	3,898	699	3,199
Administration Building	1	#220 - warden's office	down can - LED br30	5	Already Efficient	4200	0.000	5	No Work	N/A	4200	0.000	0.000	0.000	0.000	0	0	0
Administration Building	1	--->restroom	2LT8 1' circuline drum	3	12" round 76watt CFL Circuline Drum Surface mount Fixture	4200	0.076	3	REPLACE with new 15", 30 watt LED SECURITY Surface mount Round Fixtures at existing location	FAILSAFE - TR	4200	0.020	0.228	0.060	0.168	958	252	706
Administration Building	1	#221	4LT8 2x4 troffer drop ceiling	5	2x4 4-Lamp F32Watt T8, Recessed Troffer	4200	0.116	5	REPLACE with a new 32watt 2x4 LED Volumetric Dimming Kit	MOBERN - RKDISE	2730	0.032	0.580	0.160	0.420	2,436	437	1,999
Administration Building	1	#222	4LT8 2x4 troffer drop ceiling	2	2x4 4-Lamp F32Watt T8, Recessed Troffer	4200	0.116	2	REPLACE with a new 32watt 2x4 LED Volumetric Dimming Kit	MOBERN - RKDISE	2730	0.032	0.232	0.064	0.168	974	175	800
Administration Building	1	#223	4LT8 2x4 wrap pendent mount	4	1x4 4-Lamp F32Watt T8, Surface Wrap Fixture	4200	0.116	4	REPLACE with new 39watt LED Surface Wrap Fixtures	PHILIPS 1SDL	2730	0.039	0.464	0.156	0.308	1,949	426	1,523
Administration Building	1	#223	4LT8 2x4 troffer drop ceiling	4	2x4 4-Lamp F32Watt T8, Recessed Troffer	4200	0.116	4	REPLACE with a new 32watt 2x4 LED Volumetric Dimming Kit	MOBERN - RKDISE	2730	0.032	0.464	0.128	0.336	1,949	349	1,599

Building	Bldg ID	Location Detail	Notes	Pre Retrofit Fixture Qty	Pre-retrofit Description	Pre-Hours	Pre-Retrofit kW/Fixture	Post Retrofit Fixture Qty	Post Retrofit Description	Model Number	Post-Hours	Post Retrofit kW/Fixture	Existing kW	Proposed kW	kW Saved	Existing kWh	Proposed kWh	kWh Saved
Administration Building	1	--->restroom	2LT8 1' circuline drum	1	12" round 76watt CFL Circuline Drum Surface mount Fixture	4200	0.076	1	REPLACE with new 15", 30 watt LED SECURITY Surface mount Round Fixtures at existing location	FAILSAFE - TR	4200	0.020	0.076	0.020	0.056	319	84	235
Administration Building	1	#224	2LT8 1' circuline drum	2	12" round 76watt CFL Circuline Drum Surface mount Fixture	4200	0.076	2	REPLACE with new 15", 30 watt LED SECURITY Surface mount Round Fixtures at existing location	FAILSAFE - TR	4200	0.020	0.152	0.040	0.112	638	168	470
Administration Building	1	#224	emergency 1' drum w/ frosted lens	1	18 Watt CFL-PL 2pin Lamp, Cylinder/Drum	4200	0.018	1	RELAMP with a 8watt LED PL (Ballast Bypass) Lamp	KEYSTONE - KT	4200	0.008	0.018	0.008	0.010	76	34	42
Administration Building	1	#225	2LT12 4' wrap short pendent mount	33	1x4 2-Lamp F40/34Watt T12, Surface Mount Fixture	4200	0.072	33	REPLACE with new 39watt LED Surface Wrap Fixtures	PHILIPS 1SDL	2730	0.039	2.376	1.287	1.089	9,979	3,514	6,466
Administration Building	1	hallway	2LT8 4' wrap pendent mount	4	1x4 2-Lamp F32Watt T8, Surface Wraparound Fixture	8760	0.058	4	REPLACE with new 39watt LED Surface Wrap Fixtures	PHILIPS 1SDL	8760	0.039	0.232	0.156	0.076	2,032	1,367	666
Administration Building	1	hallway	emergency 1' drum w/ frosted lens	4	18 Watt CFL-PL 2pin Lamp, Cylinder/Drum	4200	0.018	4	RELAMP with a 8watt LED PL (Ballast Bypass) Lamp	KEYSTONE - KT	4200	0.008	0.072	0.032	0.040	302	134	168
Administration Building	1	#201 - attic	75w incandescent	16	75 watt Incandescent Screwin A19 Lamp	2000	0.075	16	RELAMP with a 12 watt LED A19 Lamp	SYLVANIA - A19	2000	0.012	1.200	0.192	1.008	2,400	384	2,016
Administration Building	1	Exterior	250w HPS 1x1 canopy surface mount	3	250watt HID Surface Mount Canopy Fixture	4380	0.300	3	REPLACE with new 85 watt LED Surface mount Canopy Fixtures at existing location	CREE - CPY250	3942	0.085	0.900	0.255	0.645	3,942	1,005	2,937
Administration Building	1	Exterior	flood w/ corn cob LED	1	Already Efficient	4200	0.000	1	No Work	N/A	4200	0.000	0.000	0.000	0.000	0	0	0
Building #2 - Housing Unit F	2	Cell Count	2LT8 4' metal tamper proof wrap	11	1x4 2-Lamp F32Watt T8, Surface Wraparound Fixture, SECURITY	4200	0.058	11	RETROFIT with a 24watt LED Strip Kit and electronic driver	LED LIVING - G2/CLARIS	4200	0.024	0.638	0.264	0.374	2,680	1,109	1,571
Building #3 - Housing Unit E	3	Cell Count	2LT8 4' metal tamper proof wrap	42	1x4 2-Lamp F32Watt T8, Surface Wraparound Fixture, SECURITY	4200	0.058	42	RETROFIT with a 24watt LED Strip Kit and electronic driver	LED LIVING - G2/CLARIS	4200	0.024	2.436	1.008	1.428	10,231	4,234	5,998
Building #4 - Housing Unit C	4	Cell Count	2LT8 4' metal tamper proof wrap	37	1x4 2-Lamp F32Watt T8, Surface Wraparound Fixture, SECURITY	4200	0.058	37	RETROFIT with a 24watt LED Strip Kit and electronic driver	LED LIVING - G2/CLARIS	4200	0.024	2.146	0.888	1.258	9,013	3,730	5,284
Building #5 - Housing Unit A	5	Cell Count	2LT8 4' metal tamper proof wrap	39	1x4 2-Lamp F32Watt T8, Surface Wraparound Fixture, SECURITY	4200	0.058	39	RETROFIT with a 24watt LED Strip Kit and electronic driver	LED LIVING - G2/CLARIS	4200	0.024	2.262	0.936	1.326	9,500	3,931	5,569
Chapel	6	Restroom	75w incandescent vanity	1	75 watt Incandescent Screwin A19 Lamp	4200	0.075	1	RELAMP with a 12 watt LED A19 Lamp	SYLVANIA - A19	4200	0.012	0.075	0.012	0.063	315	50	265
Chapel	6	Hallways	75w incandescent 1x1 recessed drywall ceiling	5	75 watt Incandescent Screwin A19 Lamp	8760	0.075	5	RELAMP with a 12 watt LED A19 Lamp	SYLVANIA - A19	8760	0.012	0.375	0.060	0.315	3,285	526	2,759
Chapel	6		75w incandescent 1x1 ceiling surface mount	3	75 watt Incandescent Screwin A19 Lamp	4200	0.075	3	RELAMP with a 12 watt LED A19 Lamp	SYLVANIA - A19	4200	0.012	0.225	0.036	0.189	945	151	794

Building	Bldg ID	Location Detail	Notes	Pre Retrofit Fixture Qty	Pre-retrofit Description	Pre-Hours	Pre-Retrofit kW/Fixture	Post Retrofit Fixture Qty	Post Retrofit Description	Model Number	Post-Hours	Post Retrofit kW/Fixture	Existing kW	Proposed kW	kW Saved	Existing kWh	Proposed kWh	kWh Saved
Chapel	6		75w incandescent in shock it	3	75 watt Incandescent Screwin A19 Lamp	4200	0.075	3	RELAMP with a 12 watt LED A19 Lamp	SYLVANIA - A19	4200	0.012	0.225	0.036	0.189	945	151	794
Chapel	6		2LT8 4' vapor surface mount	2	1x4 2-Lamp F32Watt T8, Vaportight Fixture, SECURITY	4200	0.058	2	RETROFIT with a 24watt LED Strip Kit and electronic driver	LED LIVING - G2/CLARIS	4200	0.024	0.116	0.048	0.068	487	202	286
Chapel	6	Alter	6" down can	4	42 Watt CFL Downlight, 6" round	4200	0.042	4	RETROFIT with a 13watt LED Downlight Module Kit [SYLVANIA RT6HO] with 8" adapter when applicable	SYLVANIA - RT6HO	4200	0.013	0.168	0.052	0.116	706	218	487
Chapel	6		8" down can	6	42 Watt CFL Downlight, 6" round	4200	0.042	6	RETROFIT with a 13watt LED Downlight Module Kit [SYLVANIA RT6HO] with 8" adapter when applicable	SYLVANIA - RT6HO	4200	0.013	0.252	0.078	0.174	1,058	328	731
Chapel	6		8" down can w/ glass lens	5	42 Watt CFL Downlight, 6" round	4200	0.042	5	RETROFIT with a 13watt LED Downlight Module Kit [SYLVANIA RT6HO] with 8" adapter when applicable	SYLVANIA - RT6HO	4200	0.013	0.210	0.065	0.145	882	273	609
Chapel	6	Back balcony	4LT8 2x4 troffer wall mount	1	2x4 4-Lamp F32Watt T8, Recessed Troffer	4200	0.116	1	REPLACE with a new 32watt 2x4 LED Volumetric Dimming Kit	MOBERN - RKDISE	4200	0.032	0.116	0.032	0.084	487	134	353
Chapel	6	Chandelier	non-standard edison base lamp	6	150watt INC Pendent Mount Chandelier Fixture	4200	0.150	6	REPLACE with new 60watt LED Architectural up/downlight dimming pendant fixture	DECO - RNI	4200	0.060	0.900	0.360	0.540	3,780	1,512	2,268
Chapel	6	Cove	1LT8 4' strip	36	1x4 fixture with (1) F32watt T8 and (1) Normal Power Factor Ballast	4200	0.029	36	(1) 14watt LED-T8 Rotatable Lamps and (1) new electronic driver. Clean and drywipe existing fixture	PHILIPS - INSTANTFIT	4200	0.015	1.044	0.540	0.504	4,385	2,268	2,117
Chapel	6	Fan Lights	don't work	4	60 watt Incandescent Screwin A19 Lamp	2000	0.060	4	RELAMP with a 9watt LED A19 Lamp	SYLVANIA - A19	2000	0.009	0.240	0.036	0.204	480	72	408
Chapel	6	Front vestibule (locked door; looked through small window)	8" down can	4	42 Watt CFL Downlight, 6" round	4200	0.042	4	RETROFIT with a 13watt LED Downlight Module Kit [SYLVANIA RT6HO] with 8" adapter when applicable	SYLVANIA - RT6HO	4200	0.013	0.168	0.052	0.116	706	218	487
Chapel	6		recessed round fixture w/ large incandescent	1	75 watt Incandescent Screwin A19 Lamp	4200	0.075	1	RELAMP with a 12 watt LED A19 Lamp	SYLVANIA - A19	4200	0.012	0.075	0.012	0.063	315	50	265
Chapel	6	Visitor Area	2LT8 4' vapor surface mount	21	1x4 2-Lamp F32Watt T8, Vaportight Fixture, SECURITY	4200	0.058	21	RETROFIT with a 24watt LED Strip Kit and electronic driver	LED LIVING - G2/CLARIS	4200	0.024	1.218	0.504	0.714	5,116	2,117	2,999
Chapel	6		75w incandescent 1x1 ceiling surface mount	11	75 watt Incandescent Screwin A19 Lamp	4200	0.075	11	RELAMP with a 12 watt LED A19 Lamp	SYLVANIA - A19	4200	0.012	0.825	0.132	0.693	3,465	554	2,911
Chapel	6		Par38 track lighting	15	75 Watt Halogen Track Light	4200	0.075	15	RELAMP with 19 watt LED PAR Lamps	SYLVANIA - PAR	4200	0.019	1.125	0.285	0.840	4,725	1,197	3,528
Chapel	6		chandelier	3	150watt Inc Pendant Highbay	4200	0.150	3	REPLACE with new 60 watt LED Canopy Fixtures, Surface mount to ceiling	CREE - CPY250	4200	0.060	0.450	0.180	0.270	1,890	756	1,134
Chapel	6	Restrooms	75w incandescent 1x1 recessed drywall ceiling	2	75 watt Incandescent Screwin A19 Lamp	4200	0.075	2	RELAMP with a 12 watt LED A19 Lamp	SYLVANIA - A19	4200	0.012	0.150	0.024	0.126	630	101	529

Building	Bldg ID	Location Detail	Notes	Pre Retrofit Fixture Qty	Pre-retrofit Description	Pre-Hours	Pre-Retrofit kW/Fixture	Post Retrofit Fixture Qty	Post Retrofit Description	Model Number	Post-Hours	Post Retrofit kW/Fixture	Existing kW	Proposed kW	kW Saved	Existing kWh	Proposed kWh	kWh Saved
Chapel	6		cylinder vanity	1	8" round 42watt CFL Cylinder Vanity, SECURITY	4200	0.042	1	REPLACE with new 15", 30 watt LED SECURITY Surface mount Round Fixtures at existing location	FAILSAFE - TR	4200	0.020	0.042	0.020	0.022	176	84	92
Chapel	6	Boiler Room	75w incandescent in shock it	6	75 watt Incandescent Screwin A19 Lamp	2000	0.075	6	RELAMP with a 12 watt LED A19 Lamp	SYLVANIA - A19	2000	0.012	0.450	0.072	0.378	900	144	756
Gatehouse	7	Waiting area	3LT8 2x4 parabolic drop ceiling	6	2x4 3-Lamp F32Watt T8, Recessed Troffer	4200	0.084	6	REPLACE with a new 32watt 2x4 LED Volumetric Dimming Kit	MOBERN - RKDISE	4200	0.032	0.504	0.192	0.312	2,117	806	1,310
Gatehouse	7		8" down can par38	6	42 Watt CFL Downlight, 6" round	4200	0.042	6	RETROFIT with a 13watt LED Downlight Module Kit [SYLVANIA RT6HO] with 8" adapter when applicable	SYLVANIA - RT6HO	4200	0.013	0.252	0.078	0.174	1,058	328	731
Gatehouse	7	restroom	2LT8 1' circuline drum	1	12" round 76watt CFL Circuline Drum Surface mount Fixture	4200	0.076	1	REPLACE with new 15", 30 watt LED SECURITY Surface mount Round Fixtures at existing location	FAILSAFE - TR	4200	0.020	0.076	0.020	0.056	319	84	235
Gatehouse	7	storage	cfl twist	1	22 Watt CFL Bulb with E26 Base	2000	0.022	1	RELAMP with a 9watt LED A19 Lamp	SYLVANIA - A19	2000	0.009	0.022	0.009	0.013	44	18	26
Gatehouse	7	staff restroom	cfl twist	1	22 Watt CFL Bulb with E26 Base	4200	0.022	1	RELAMP with a 9watt LED A19 Lamp	SYLVANIA - A19	4200	0.009	0.022	0.009	0.013	92	38	55
Housing Unit M	8	hallway	2LT8 4' vapor ceiling mount	20	1x4 2-Lamp F32Watt T8, Vaportight Fixture, SECURITY	8760	0.058	20	RETROFIT with a 24watt LED Strip Kit and electronic driver	LED LIVING - G2/CLARIS	8760	0.024	1.160	0.480	0.680	10,162	4,205	5,957
Housing Unit M	8		emergency 1' drum w/ frosted lens	8	18 Watt CFL-PL 2pin Lamp, Cylinder/Drum	4200	0.018	8	RELAMP with a 8watt LED PL (Ballast Bypass) Lamp	KEYSTONE - KT	4200	0.008	0.144	0.064	0.080	605	269	336
Housing Unit M	8		2LT8 1' circuline drum	1	12" round 76watt CFL Circuline Drum, SECURITY	4200	0.076	1	RETROFIT with a 16watt, 2352Lumen LED Wall Sconce Retrofit Kit.	REMPHOS - LEDCR-G2	4200	0.016	0.076	0.016	0.060	319	67	252
Housing Unit M	8	Cells	2LT8 4' tamper proof vapor ceiling mount	43	1x4 2-Lamp F32Watt T8, Vaportight Fixture, SECURITY	4200	0.058	43	RETROFIT with a 24watt LED Strip Kit and electronic driver	LED LIVING - G2/CLARIS	4200	0.024	2.494	1.032	1.462	10,475	4,334	6,140
Housing Unit M	8	sink	cfl twist	2	22 Watt CFL Bulb with E26 Base	4200	0.022	2	RELAMP with a 9watt LED A19 Lamp	SYLVANIA - A19	4200	0.009	0.044	0.018	0.026	185	76	109
Housing Unit M	8		cylinder vanity	2	8" round 42watt CFL Cylinder Vanity, SECURITY	4200	0.042	2	REPLACE with new 15", 30 watt LED SECURITY Surface mount Round Fixtures at existing location	FAILSAFE - TR	4200	0.020	0.084	0.040	0.044	353	168	185
Housing Unit M	8	telephone	75w incandescent in socket	1	75 watt Incandescent Screwin A19 Lamp	2000	0.075	1	RELAMP with a 12 watt LED A19 Lamp	SYLVANIA - A19	2000	0.012	0.075	0.012	0.063	150	24	126
Housing Unit M	8	stairwell	2LT8 1' circuline drum	11	12" round 76watt CFL Circuline Drum, SECURITY	8760	0.076	11	RETROFIT with a 16watt, 2352Lumen LED Wall Sconce Retrofit Kit.	REMPHOS - LEDCR-G2	8760	0.016	0.836	0.176	0.660	7,323	1,542	5,782
Housing Unit M	8		emergency 1' drum w/ frosted lens	6	18 Watt CFL-PL 2pin Lamp, Cylinder/Drum	4200	0.018	6	RELAMP with a 8watt LED PL (Ballast Bypass) Lamp	KEYSTONE - KT	4200	0.008	0.108	0.048	0.060	454	202	252

Building	Bldg ID	Location Detail	Notes	Pre Retrofit Fixture Qty	Pre-retrofit Description	Pre-Hours	Pre-Retrofit kW/Fixture	Post Retrofit Fixture Qty	Post Retrofit Description	Model Number	Post-Hours	Post Retrofit kW/Fixture	Existing kW	Proposed kW	kW Saved	Existing kWh	Proposed kWh	kWh Saved
Housing Unit M	8	showers	2LT8 1' circuline drum	8	12" round 76watt CFL Circuline Drum, SECURITY	4200	0.076	8	RETROFIT with a 16watt, 2352Lumen LED Wall Sconce Retrofit Kit.	REMPHOS - LEDCR-G2	4200	0.016	0.608	0.128	0.480	2,554	538	2,016
Housing Unit M	8	basement	75w incandescent in china hat	3	75 watt Incandescent Screwin A19 Lamp	4200	0.075	3	RELAMP with a 12 watt LED A19 Lamp	SYLVANIA - A19	4200	0.012	0.225	0.036	0.189	945	151	794
Housing Unit M	8		75w incandescent in socket	9	75 watt Incandescent Screwin A19 Lamp	4200	0.075	9	RELAMP with a 12 watt LED A19 Lamp	SYLVANIA - A19	4200	0.012	0.675	0.108	0.567	2,835	454	2,381
Housing Unit M	8		3LT12 4' industrial	13	1x4 3-Lamp F40Watt T12, Industrial Hood Fixture	4200	0.108	13	REPLACE with new 39watt LED Surface Wrap Fixtures	PHILIPS 1SDL	4200	0.039	1.404	0.507	0.897	5,897	2,129	3,767
Housing Unit M	8	#108	4LT8 4' wrap ceiling surface mount drywall	6	1x4 4-Lamp F32Watt T8, Surface Wrap Fixture, SECURITY	4200	0.116	6	RETROFIT with a 32watt LED Strip Kit and electronic driver	LED LIVING - G2/CLARIS	4200	0.032	0.696	0.192	0.504	2,923	806	2,117
Housing Unit M	8		4LT8 4' wrap pendent mount drywall	2	1x4 4-Lamp F32Watt T8, Surface Wrap Fixture, SECURITY	4200	0.116	2	RETROFIT with a 32watt LED Strip Kit and electronic driver	LED LIVING - G2/CLARIS	4200	0.032	0.232	0.064	0.168	974	269	706
Housing Unit M	8		75w incandescent in socket	2	75 watt Incandescent Screwin A19 Lamp	4200	0.075	2	RELAMP with a 12 watt LED A19 Lamp	SYLVANIA - A19	4200	0.012	0.150	0.024	0.126	630	101	529
Housing Unit M	8		2LT8 4' vapor	3	1x4 2-Lamp F32Watt T8, Vaportight Fixture, SECURITY	4200	0.058	3	RETROFIT with a 24watt LED Strip Kit and electronic driver	LED LIVING - G2/CLARIS	4200	0.024	0.174	0.072	0.102	731	302	428
Housing Unit M	8		2LT8 1' circuline drum	6	12" round 76watt CFL Circuline Drum, SECURITY	4200	0.076	6	RETROFIT with a 16watt, 2352Lumen LED Wall Sconce Retrofit Kit.	REMPHOS - LEDCR-G2	4200	0.016	0.456	0.096	0.360	1,915	403	1,512
Housing Unit M	8		2LT8 4' wrap pendent mount drywall	3	1x4 2-Lamp F32Watt T8, Surface Wraparound Fixture, SECURITY	4200	0.058	3	RETROFIT with a 24watt LED Strip Kit and electronic driver	LED LIVING - G2/CLARIS	4200	0.024	0.174	0.072	0.102	731	302	428
Housing Unit M	8		emergency 1' drum w/ frosted lens	1	18 Watt CFL-PL 2pin Lamp, Cylinder/Drum	4200	0.018	1	RELAMP with a 8watt LED PL (Ballast Bypass) Lamp	KEYSTONE - KT	4200	0.008	0.018	0.008	0.010	76	34	42
Housing Unit M	8	Exterior	1x1 canopy	1	175watt HID Surface Mount Canopy Fixture	4380	0.192	1	REPLACE with new 60 watt LED Surface mount Canopy Fixtures at existing location	CREE - CPY250	3942	0.060	0.192	0.060	0.132	841	237	604
Housing Unit M	8		250w flood w/ adj arm	5	250watt HID Adjustable Flood Area Fixture	4380	0.300	5	REPLACE with a 86watt LED Adjustable Flood mounted at existing location	CREE - OSQ/AA	4380	0.086	1.500	0.430	1.070	6,570	1,883	4,687
Housing Unit K	9	hallway	2LT8 4' vapor ceiling mount	17	1x4 2-Lamp F32Watt T8, Vaportight Fixture, SECURITY	8760	0.058	17	RETROFIT with a 24watt LED Strip Kit and electronic driver	LED LIVING - G2/CLARIS	8760	0.024	0.986	0.408	0.578	8,637	3,574	5,063
Housing Unit K	9		emergency 1' drum w/ frosted lens	14	18 Watt CFL-PL 2pin Lamp, Cylinder/Drum	4200	0.018	14	RELAMP with a 8watt LED PL (Ballast Bypass) Lamp	KEYSTONE - KT	4200	0.008	0.252	0.112	0.140	1,058	470	588
Housing Unit K	9		75w incandescent in socket	2	75 watt Incandescent Screwin A19 Lamp	4200	0.075	2	RELAMP with a 12 watt LED A19 Lamp	SYLVANIA - A19	4200	0.012	0.150	0.024	0.126	630	101	529

Building	Bldg ID	Location Detail	Notes	Pre Retrofit Fixture Qty	Pre-retrofit Description	Pre-Hours	Pre-Retrofit kW/Fixture	Post Retrofit Fixture Qty	Post Retrofit Description	Model Number	Post-Hours	Post Retrofit kW/Fixture	Existing kW	Proposed kW	kW Saved	Existing kWh	Proposed kWh	kWh Saved
Housing Unit K	9	#106A	2LT8 1' circuline drum	1	12" round 76watt CFL Circuline Drum, SECURITY	4200	0.076	1	RETROFIT with a 16watt, 2352Lumen LED Wall Sconce Retrofit Kit.	REMPHOS - LEDCR-G2	4200	0.016	0.076	0.016	0.060	319	67	252
Housing Unit K	9	#103	2LT8 4' vapor ceiling mount	2	1x4 2-Lamp F32Watt T8, Vaportight Fixture, SECURITY	4200	0.058	2	RETROFIT with a 24watt LED Strip Kit and electronic driver	LED LIVING - G2/CLARIS	4200	0.024	0.116	0.048	0.068	487	202	286
Housing Unit K	9		75w incandescent in socket	1	75 watt Incandescent Screwin A19 Lamp	4200	0.075	1	RELAMP with a 12 watt LED A19 Lamp	SYLVANIA - A19	4200	0.012	0.075	0.012	0.063	315	50	265
Housing Unit K	9	#101A	cfl twist	1	22 Watt CFL Bulb with E26 Base	4200	0.022	1	RELAMP with a 9watt LED A19 Lamp	SYLVANIA - A19	4200	0.009	0.022	0.009	0.013	92	38	55
Housing Unit K	9	#107	2LT8 4' metal wrap	2	1x4 2-Lamp F32Watt T8, Surface Wraparound Fixture, SECURITY	4200	0.058	2	RETROFIT with a 24watt LED Strip Kit and electronic driver	LED LIVING - G2/CLARIS	4200	0.024	0.116	0.048	0.068	487	202	286
Housing Unit K	9	#104	2LT8 1' circuline drum	4	12" round 76watt CFL Circuline Drum, SECURITY	4200	0.076	4	RETROFIT with a 16watt, 2352Lumen LED Wall Sconce Retrofit Kit.	REMPHOS - LEDCR-G2	4200	0.016	0.304	0.064	0.240	1,277	269	1,008
Housing Unit K	9		cfl twist	10	22 Watt CFL Bulb with E26 Base	4200	0.022	10	RELAMP with a 9watt LED A19 Lamp	SYLVANIA - A19	4200	0.009	0.220	0.090	0.130	924	378	546
Housing Unit K	9		ceiling globe fixture	2	100watt HID Surface Mount Canopy Fixture - SECURITY FIXTURE	4380	0.120	2	REPLACE with new 20 watt LED SECURITY Surface mount Canopy Fixtures at existing location	FAILSAFE - G12	4380	0.020	0.240	0.040	0.200	1,051	175	876
Housing Unit K	9	Cells	2LT8 4' metal tamper proof wrap	34	1x4 2-Lamp F32Watt T8, Surface Wraparound Fixture, SECURITY	4200	0.058	34	RETROFIT with a 24watt LED Strip Kit and electronic driver	LED LIVING - G2/CLARIS	4200	0.024	1.972	0.816	1.156	8,282	3,427	4,855
Housing Unit K	9	stairwell	2LT8 1' circuline drum	1	12" round 76watt CFL Circuline Drum, SECURITY	8760	0.076	1	RETROFIT with a 16watt, 2352Lumen LED Wall Sconce Retrofit Kit.	REMPHOS - LEDCR-G2	8760	0.016	0.076	0.016	0.060	666	140	526
Housing Unit K	9		75w incandescent in socket	1	75 watt Incandescent Screwin A19 Lamp	4200	0.075	1	RELAMP with a 12 watt LED A19 Lamp	SYLVANIA - A19	4200	0.012	0.075	0.012	0.063	315	50	265
Housing Unit K	9	#201	ceiling globe fixture	1	100watt HID Surface Mount Canopy Fixture - SECURITY FIXTURE	4380	0.120	1	REPLACE with new 20 watt LED SECURITY Surface mount Canopy Fixtures at existing location	FAILSAFE - G12	4380	0.020	0.120	0.020	0.100	526	88	438
Housing Unit K	9	#202	2LT8 4' metal wrap	5	1x4 2-Lamp F32Watt T8, Surface Wraparound Fixture, SECURITY	4200	0.058	5	RETROFIT with a 24watt LED Strip Kit and electronic driver	LED LIVING - G2/CLARIS	4200	0.024	0.290	0.120	0.170	1,218	504	714
Housing Unit K	9		75w incandescent in socket	1	75 watt Incandescent Screwin A19 Lamp	4200	0.075	1	RELAMP with a 12 watt LED A19 Lamp	SYLVANIA - A19	4200	0.012	0.075	0.012	0.063	315	50	265
Housing Unit K	9	#203	2LT8 4' vapor ceiling mount	1	1x4 2-Lamp F32Watt T8, Vaportight Fixture, SECURITY	4200	0.058	1	RETROFIT with a 24watt LED Strip Kit and electronic driver	LED LIVING - G2/CLARIS	4200	0.024	0.058	0.024	0.034	244	101	143
Housing Unit K	9	attic	2LT8 4' wrap	1	1x4 2-Lamp F32Watt T8, Surface Wraparound Fixture, SECURITY	4200	0.058	1	RETROFIT with a 24watt LED Strip Kit and electronic driver	LED LIVING - G2/CLARIS	4200	0.024	0.058	0.024	0.034	244	101	143

Building	Bldg ID	Location Detail	Notes	Pre Retrofit Fixture Qty	Pre-retrofit Description	Pre-Hours	Pre-Retrofit kW/Fixture	Post Retrofit Fixture Qty	Post Retrofit Description	Model Number	Post-Hours	Post Retrofit kW/Fixture	Existing kW	Proposed kW	kW Saved	Existing kWh	Proposed kWh	kWh Saved
Housing Unit K	9		75w incandescent in socket	4	75 watt Incandescent Screwin A19 Lamp	4200	0.075	4	RELAMP with a 12 watt LED A19 Lamp	SYLVANIA - A19	4200	0.012	0.300	0.048	0.252	1,260	202	1,058
Housing Unit K	9	#K10 - basement	75w incandescent in socket	12	75 watt Incandescent Screwin A19 Lamp	4200	0.075	12	RELAMP with a 12 watt LED A19 Lamp	SYLVANIA - A19	4200	0.012	0.900	0.144	0.756	3,780	605	3,175
Housing Unit K	9		emergency 1' drum w/ frosted lens	1	18 Watt CFL-PL 2pin Lamp, Cylinder/Drum	4200	0.018	1	RELAMP with a 8watt LED PL (Ballast Bypass) Lamp	KEYSTONE - KT	4200	0.008	0.018	0.008	0.010	76	34	42
Housing Unit K	9		old canopy	2	100watt HID Surface Mount Canopy Fixture - SECURITY FIXTURE	4380	0.120	2	REPLACE with new 20 watt LED SECURITY Surface mount Canopy Fixtures at existing location	FAILSAFE - G12	4380	0.020	0.240	0.040	0.200	1,051	175	876
Wilson Infirmary	10	vestibule	4LT8 2x4 prismatic troffer drop ceiling	2	2x4 4-Lamp F32Watt T8, SECURITY	4200	0.116	2	RETROFIT with a 2x4 40watt, 4800Lumen LED Troffer Retrofit Kit.	SYLVANIA - LEDVANCE/LEDR	4200	0.048	0.232	0.096	0.136	974	403	571
Wilson Infirmary	10	hallway	4LT8 2x4 prismatic troffer drop ceiling	27	2x4 4-Lamp F32Watt T8, SECURITY	8760	0.116	27	RETROFIT with a 2x4 40watt, 4800Lumen LED Troffer Retrofit Kit.	SYLVANIA - LEDVANCE/LEDR	8760	0.048	3.132	1.296	1.836	27,436	11,353	16,083
Wilson Infirmary	10	atrium	6LT8 2x4 prismatic troffer drop ceiling	16	2x4 6-Lamp F32Watt T8, Recessed Troffer, 20'	4200	0.191	16	REPLACE with a new 62watt 2x4 LED HO Volumetric Dimming Kit	MOBERN - RKDISE	4200	0.062	3.062	0.992	2.070	12,862	4,166	8,696
Wilson Infirmary	10	Cells	2LT8 4' metal wrap tamper proof ceiling mount	62	1x4 2-Lamp F32Watt T8, Surface Wraparound Fixture, SECURITY	4200	0.058	62	RETROFIT with a 24watt LED Strip Kit and electronic driver	LED LIVING - G2/CLARIS	4200	0.024	3.596	1.488	2.108	15,103	6,250	8,854
Wilson Infirmary	10	#117	4LT8 2x4 prismatic troffer drop ceiling	4	2x4 4-Lamp F32Watt T8, SECURITY	4200	0.116	4	RETROFIT with a 2x4 40watt, 4800Lumen LED Troffer Retrofit Kit.	SYLVANIA - LEDVANCE/LEDR	4200	0.048	0.464	0.192	0.272	1,949	806	1,142
Wilson Infirmary	10	staff restroom	4LT8 2x4 prismatic troffer drop ceiling	1	2x4 4-Lamp F32Watt T8, SECURITY	4200	0.116	1	RETROFIT with a 2x4 40watt, 4800Lumen LED Troffer Retrofit Kit.	SYLVANIA - LEDVANCE/LEDR	4200	0.048	0.116	0.048	0.068	487	202	286
Wilson Infirmary	10	HVAC room	4LT8 2x4 prismatic troffer pendent mount	4	2x4 4-Lamp F32Watt T8, SECURITY	2000	0.116	4	RETROFIT with a 2x4 40watt, 4800Lumen LED Troffer Retrofit Kit.	SYLVANIA - LEDVANCE/LEDR	2000	0.048	0.464	0.192	0.272	928	384	544
Wilson Infirmary	10	restroom	2LT8 4' wrap	3	1x4 2-Lamp F32Watt T8, Surface Wraparound Fixture, SECURITY	4200	0.058	3	RETROFIT with a 24watt LED Strip Kit and electronic driver	LED LIVING - G2/CLARIS	4200	0.024	0.174	0.072	0.102	731	302	428
Wilson Infirmary	10		2LT8 2' wrap	4	1x2 2-Lamp F17Watt T8, Surface Wraparound Fixture	4200	0.034	4	RETROFIT with a 16watt LED Strip Kit and electronic driver	LED LIVING - G2/CLARIS	4200	0.016	0.136	0.064	0.072	571	269	302
Wilson Infirmary	10	#134	4LT8 2x4 prismatic troffer drop ceiling	2	2x4 4-Lamp F32Watt T8, SECURITY	4200	0.116	2	RETROFIT with a 2x4 40watt, 4800Lumen LED Troffer Retrofit Kit.	SYLVANIA - LEDVANCE/LEDR	4200	0.048	0.232	0.096	0.136	974	403	571
Wilson Infirmary	10	Exit hallway	4LT8 2x4 prismatic troffer drop ceiling	2	2x4 4-Lamp F32Watt T8, SECURITY	8760	0.116	2	RETROFIT with a 2x4 40watt, 4800Lumen LED Troffer Retrofit Kit.	SYLVANIA - LEDVANCE/LEDR	8760	0.048	0.232	0.096	0.136	2,032	841	1,191
Wilson Infirmary	10	#137	4LT8 2x4 prismatic troffer drop ceiling	3	2x4 4-Lamp F32Watt T8, SECURITY	4200	0.116	3	RETROFIT with a 2x4 40watt, 4800Lumen LED Troffer Retrofit Kit.	SYLVANIA - LEDVANCE/LEDR	4200	0.048	0.348	0.144	0.204	1,462	605	857

Building	Bldg ID	Location Detail	Notes	Pre Retrofit Fixture Qty	Pre-retrofit Description	Pre-Hours	Pre-Retrofit kW/Fixture	Post Retrofit Fixture Qty	Post Retrofit Description	Model Number	Post-Hours	Post Retrofit kW/Fixture	Existing kW	Proposed kW	kW Saved	Existing kWh	Proposed kWh	kWh Saved
Wilson Infirmary	10	#127 hallway	2LT8 4' wrap tamper proof	2	1x4 2-Lamp F32Watt T8, Surface Wraparound Fixture, SECURITY	8760	0.058	2	RETROFIT with a 24watt LED Strip Kit and electronic driver	LED LIVING - G2/CLARIS	8760	0.024	0.116	0.048	0.068	1,016	420	596
Wilson Infirmary	10	Back hallway	LED circular	1	Already Efficient	8760	0.000	1	No Work	N/A	8760	0.000	0.000	0.000	0.000	0	0	0
Wilson Infirmary	10	Electrical/pump room	4LT8 2x4 prismatic troffer chain mount	6	2x4 4-Lamp F32Watt T8, SECURITY	4200	0.116	6	RETROFIT with a 2x4 40watt, 4800Lumen LED Troffer Retrofit Kit.	SYLVANIA - LEDVANCE/LEDR	4200	0.048	0.696	0.288	0.408	2,923	1,210	1,714
Wilson Infirmary	10	Exterior	250w MH shoebox wallpack trunnion mount	5	250watt HID Adjustable Flood Area Fixture	4380	0.300	5	REPLACE with a 86watt LED Adjustable Flood mounted at existing location	CREE - OSQ/AA	3942	0.086	1.500	0.430	1.070	6,570	1,695	4,875
Wilson Infirmary	10		175w MH small wall pack	4	250watt HID Flushmount Wallpack Fixture	4380	0.295	4	REPLACE with new 85 watt LED Flushmount Wallpack Fixtures at existing location	CREE - C-WP-A	4380	0.085	1.180	0.340	0.840	5,168	1,489	3,679
Wilson Infirmary	10		250w MH flood w/ adj arm	1	250watt HID Adjustable Flood Area Fixture	4380	0.300	1	REPLACE with a 86watt LED Adjustable Flood mounted at existing location	CREE - OSQ/AA	4380	0.086	0.300	0.086	0.214	1,314	377	937
Wilson Infirmary	10	Hallway	2LT8 4' metal wrap ceiling mount	10	1x4 2-Lamp F32Watt T8, Surface Wraparound Fixture, SECURITY	8760	0.058	10	RETROFIT with a 24watt LED Strip Kit and electronic driver	LED LIVING - G2/CLARIS	8760	0.024	0.580	0.240	0.340	5,081	2,102	2,978
Wilson Infirmary	10		emergency 1' drum w/ frosted lens	3	18 Watt CFL-PL 2pin Lamp, Cylinder/Drum	4200	0.018	3	RELAMP with a 8watt LED PL (Ballast Bypass) Lamp	KEYSTONE - KT	4200	0.008	0.054	0.024	0.030	227	101	126
Wilson Infirmary	10	#135	4LT8 4' wrap	6	1x4 4-Lamp F32Watt T8, Surface Wrap Fixture, SECURITY	4200	0.116	6	RETROFIT with a 32watt LED Strip Kit and electronic driver	LED LIVING - G2/CLARIS	4200	0.032	0.696	0.192	0.504	2,923	806	2,117
Wilson Infirmary	10		75w incandescent	3	75 watt Incandescent Screwin A19 Lamp	4200	0.075	3	RELAMP with a 12 watt LED A19 Lamp	SYLVANIA - A19	4200	0.012	0.225	0.036	0.189	945	151	794
Wilson Infirmary	10	#136	2LT8 4' vapor	2	1x4 2-Lamp F32Watt T8, Vaportight Fixture, SECURITY	4200	0.058	2	RETROFIT with a 24watt LED Strip Kit and electronic driver	LED LIVING - G2/CLARIS	4200	0.024	0.116	0.048	0.068	487	202	286
Wilson Infirmary	10		75w incandescent	2	75 watt Incandescent Screwin A19 Lamp	4200	0.075	2	RELAMP with a 12 watt LED A19 Lamp	SYLVANIA - A19	4200	0.012	0.150	0.024	0.126	630	101	529
Wilson Infirmary	10	#134	4LT8 4' wrap	1	1x4 4-Lamp F32Watt T8, Surface Wrap Fixture, SECURITY	4200	0.116	1	RETROFIT with a 32watt LED Strip Kit and electronic driver	LED LIVING - G2/CLARIS	4200	0.032	0.116	0.032	0.084	487	134	353
Wilson Infirmary	10	hal1way	emergency 1' drum w/ frosted lens	2	18 Watt CFL-PL 2pin Lamp, Cylinder/Drum	8760	0.018	2	RELAMP with a 8watt LED PL (Ballast Bypass) Lamp	KEYSTONE - KT	8760	0.008	0.036	0.016	0.020	315	140	175
Wilson Infirmary	10		2LT8 4' metal wrap	5	1x4 2-Lamp F32Watt T8, Surface Wraparound Fixture, SECURITY	4200	0.058	5	RETROFIT with a 24watt LED Strip Kit and electronic driver	LED LIVING - G2/CLARIS	4200	0.024	0.290	0.120	0.170	1,218	504	714
Wilson Infirmary	10	#132	2lT8 4' parabolic wrap butted	4	1x4 2-Lamp F32Watt T8, Surface Wraparound Fixture, SECURITY	4200	0.058	4	RETROFIT with a 24watt LED Strip Kit and electronic driver	LED LIVING - G2/CLARIS	4200	0.024	0.232	0.096	0.136	974	403	571

Building	Bldg ID	Location Detail	Notes	Pre Retrofit Fixture Qty	Pre-retrofit Description	Pre-Hours	Pre-Retrofit kW/Fixture	Post Retrofit Fixture Qty	Post Retrofit Description	Model Number	Post-Hours	Post Retrofit kW/Fixture	Existing kW	Proposed kW	kW Saved	Existing kWh	Proposed kWh	kWh Saved
Wilson Infirmary	10	#133	2LT8 4' vapor	2	1x4 2-Lamp F32Watt T8, Vaportight Fixture, SECURITY	4200	0.058	2	RETROFIT with a 24watt LED Strip Kit and electronic driver	LED LIVING - G2/CLARIS	4200	0.024	0.116	0.048	0.068	487	202	286
Wilson Infirmary	10	#138	4LT8 4' wrap	2	1x4 4-Lamp F32Watt T8, Surface Wrap Fixture, SECURITY	4200	0.116	2	RETROFIT with a 32watt LED Strip Kit and electronic driver	LED LIVING - G2/CLARIS	4200	0.032	0.232	0.064	0.168	974	269	706
Wilson Infirmary	10	#120, #121, #122	2LT8 4' vapor	3	1x4 2-Lamp F32Watt T8, Vaportight Fixture, SECURITY	4200	0.058	3	RETROFIT with a 24watt LED Strip Kit and electronic driver	LED LIVING - G2/CLARIS	4200	0.024	0.174	0.072	0.102	731	302	428
Wilson Infirmary	10	#128	4LT8 2x4 troffer surface ceiling mount	3	2x4 4-Lamp F32Watt T8, SECURITY	4200	0.116	3	RETROFIT with a 2x4 40watt, 4800Lumen LED Troffer Retrofit Kit.	SYLVANIA - LEDVANCE/LEDR	4200	0.048	0.348	0.144	0.204	1,462	605	857
Wilson Infirmary	10	#129	4LT8 2x4 troffer surface ceiling mount	3	2x4 4-Lamp F32Watt T8, SECURITY	4200	0.116	3	RETROFIT with a 2x4 40watt, 4800Lumen LED Troffer Retrofit Kit.	SYLVANIA - LEDVANCE/LEDR	4200	0.048	0.348	0.144	0.204	1,462	605	857
Wilson Infirmary	10	#123	4LT8 2x4 troffer surface ceiling mount	2	2x4 4-Lamp F32Watt T8, SECURITY	4200	0.116	2	RETROFIT with a 2x4 40watt, 4800Lumen LED Troffer Retrofit Kit.	SYLVANIA - LEDVANCE/LEDR	4200	0.048	0.232	0.096	0.136	974	403	571
Wilson Infirmary	10		2LT8 4' vapor	12	1x4 2-Lamp F32Watt T8, Vaportight Fixture, SECURITY	4200	0.058	12	RETROFIT with a 24watt LED Strip Kit and electronic driver	LED LIVING - G2/CLARIS	4200	0.024	0.696	0.288	0.408	2,923	1,210	1,714
Wilson Infirmary	10		2LT8 4' metal wrap	1	1x4 2-Lamp F32Watt T8, Surface Wraparound Fixture, SECURITY	4200	0.058	1	RETROFIT with a 24watt LED Strip Kit and electronic driver	LED LIVING - G2/CLARIS	4200	0.024	0.058	0.024	0.034	244	101	143
Wilson Infirmary	10	Pharmacy	2LT8 4' prismatic wrap	5	1x4 2-Lamp F32Watt T8, Surface Wraparound Fixture, SECURITY	4200	0.058	5	RETROFIT with a 24watt LED Strip Kit and electronic driver	LED LIVING - G2/CLARIS	4200	0.024	0.290	0.120	0.170	1,218	504	714
Wilson Infirmary	10	POC	2LT8 4' vapor	5	1x4 2-Lamp F32Watt T8, Vaportight Fixture, SECURITY	4200	0.058	5	RETROFIT with a 24watt LED Strip Kit and electronic driver	LED LIVING - G2/CLARIS	4200	0.024	0.290	0.120	0.170	1,218	504	714
Wilson Infirmary	10		2LT8 4' metal wrap	1	1x4 2-Lamp F32Watt T8, Surface Wraparound Fixture, SECURITY	4200	0.058	1	RETROFIT with a 24watt LED Strip Kit and electronic driver	LED LIVING - G2/CLARIS	4200	0.024	0.058	0.024	0.034	244	101	143
Wilson Infirmary	10	Police station	2LT8 4' metal wrap	1	1x4 2-Lamp F32Watt T8, Surface Wraparound Fixture, SECURITY	4200	0.058	1	RETROFIT with a 24watt LED Strip Kit and electronic driver	LED LIVING - G2/CLARIS	4200	0.024	0.058	0.024	0.034	244	101	143
Wilson Infirmary	10	#107	2LT8 4' metal wrap	1	1x4 2-Lamp F32Watt T8, Surface Wraparound Fixture, SECURITY	4200	0.058	1	RETROFIT with a 24watt LED Strip Kit and electronic driver	LED LIVING - G2/CLARIS	4200	0.024	0.058	0.024	0.034	244	101	143
Wilson Infirmary	10		4LT8 2x4 troffer surface ceiling mount	14	2x4 4-Lamp F32Watt T8, SECURITY	4200	0.116	14	RETROFIT with a 2x4 40watt, 4800Lumen LED Troffer Retrofit Kit.	SYLVANIA - LEDVANCE/LEDR	4200	0.048	1.624	0.672	0.952	6,821	2,822	3,998
Wilson Infirmary	10		emergency 1' drum w/ frosted lens	2	18 Watt CFL-PL 2pin Lamp, Cylinder/Drum	4200	0.018	2	RELAMP with a 8watt LED PL (Ballast Bypass) Lamp	KEYSTONE - KT	4200	0.008	0.036	0.016	0.020	151	67	84
Wilson Infirmary	10	stairwell	2LT8 1' circuline drum	18	12" round 76watt CFL Circuline Drum, SECURITY	8760	0.076	18	RETROFIT with a 16watt, 2352Lumen LED Wall Sconce Retrofit Kit.	REMPHOS - LEDCR-G2	8760	0.016	1.368	0.288	1.080	11,984	2,523	9,461

Building	Bldg ID	Location Detail	Notes	Pre Retrofit Fixture Qty	Pre-retrofit Description	Pre-Hours	Pre-Retrofit kW/Fixture	Post Retrofit Fixture Qty	Post Retrofit Description	Model Number	Post-Hours	Post Retrofit kW/Fixture	Existing kW	Proposed kW	kW Saved	Existing kWh	Proposed kWh	kWh Saved
Wilson Infirmary	10	#005	75w incandescent in china hat	6	75 watt Incandescent Screwin A19 Lamp	4200	0.075	6	RELAMP with a 12 watt LED A19 Lamp	SYLVANIA - A19	4200	0.012	0.450	0.072	0.378	1,890	302	1,588
Wilson Infirmary	10		emergency 1' drum w/ frosted lens	6	18 Watt CFL-PL 2pin Lamp, Cylinder/Drum	4200	0.018	6	RELAMP with a 8watt LED PL (Ballast Bypass) Lamp	KEYSTONE - KT	4200	0.008	0.108	0.048	0.060	454	202	252
Wilson Infirmary	10	#102	2LT8 1' circuline drum	2	12" round 76watt CFL Circuline Drum, SECURITY	4200	0.076	2	RETROFIT with a 16watt, 2352Lumen LED Wall Sconce Retrofit Kit.	REMPHOS - LEDCR-G2	4200	0.016	0.152	0.032	0.120	638	134	504
Wilson Infirmary	10	#104	4LT8 2x4 troffer surface ceiling mount	1	2x4 4-Lamp F32Watt T8, SECURITY	4200	0.116	1	RETROFIT with a 2x4 40watt, 4800Lumen LED Troffer Retrofit Kit.	SYLVANIA - LEDVANCE/LEDR	4200	0.048	0.116	0.048	0.068	487	202	286
Wilson Infirmary	10	#105	4LT8 2x4 troffer surface ceiling mount	2	2x4 4-Lamp F32Watt T8, SECURITY	4200	0.116	2	RETROFIT with a 2x4 40watt, 4800Lumen LED Troffer Retrofit Kit.	SYLVANIA - LEDVANCE/LEDR	4200	0.048	0.232	0.096	0.136	974	403	571
Wilson Infirmary	10	sink	75w incandescent	1	75 watt Incandescent Screwin A19 Lamp	4200	0.075	1	RELAMP with a 12 watt LED A19 Lamp	SYLVANIA - A19	4200	0.012	0.075	0.012	0.063	315	50	265
Wilson Infirmary	10	Cells	2LT8 4' metal wrap tamper proof ceiling mount	18	1x4 2-Lamp F32Watt T8, Surface Wraparound Fixture, SECURITY	4200	0.058	18	RETROFIT with a 24watt LED Strip Kit and electronic driver	LED LIVING - G2/CLARIS	4200	0.024	1.044	0.432	0.612	4,385	1,814	2,570
Wilson Infirmary	10	Hallway	2LT8 4' metal wrap	6	1x4 2-Lamp F32Watt T8, Surface Wraparound Fixture, SECURITY	8760	0.058	6	RETROFIT with a 24watt LED Strip Kit and electronic driver	LED LIVING - G2/CLARIS	8760	0.024	0.348	0.144	0.204	3,048	1,261	1,787
Wilson Infirmary	10		emergency 1' drum w/ frosted lens	3	18 Watt CFL-PL 2pin Lamp, Cylinder/Drum	4200	0.018	3	RELAMP with a 8watt LED PL (Ballast Bypass) Lamp	KEYSTONE - KT	4200	0.008	0.054	0.024	0.030	227	101	126
Wilson Infirmary	10	Shower	drum	2	60 watt Incandescent Screwin A19 Lamp	4200	0.060	2	RELAMP with a 9watt LED A19 Lamp	SYLVANIA - A19	4200	0.009	0.120	0.018	0.102	504	76	428
Wilson Infirmary	10	Storage w/ metal gate	2LT8 1' circuline drum	1	12" round 76watt CFL Circuline Drum, SECURITY	2000	0.076	1	RETROFIT with a 16watt, 2352Lumen LED Wall Sconce Retrofit Kit.	REMPHOS - LEDCR-G2	2000	0.016	0.076	0.016	0.060	152	32	120
Wilson Infirmary	10	Exterior	175w HPS 1x1 canopy	4	175watt HID Surface Mount Canopy Fixture	4380	0.192	4	REPLACE with new 60 watt LED Surface mount Canopy Fixtures at existing location	CREE - CPY250	3942	0.060	0.768	0.240	0.528	3,364	946	2,418
Wilson Infirmary	10			3	250watt HID Flushmount Wallpack Fixture	4380	0.295	3	REPLACE with new 85 watt LED Flushmount Wallpack Fixtures at existing location	CREE - C-WP-A	4380	0.085	0.885	0.255	0.630	3,876	1,117	2,759
Wilson Infirmary	10		250w MH flood w/ adj arm	2	250watt HID Adjustable Flood Area Fixture	4380	0.300	2	REPLACE with a 86watt LED Adjustable Flood mounted at existing location	CREE - OSQ/AA	4380	0.086	0.600	0.172	0.428	2,628	753	1,875
Wilson Infirmary	10	Bldg #60 Medical Storage Shed	Narrow sconce w/ cfl	6	84Watt CFL Wall Sconce Slender Fixture	4200	0.084	6	RETROFIT with a 15watt, 2130Lumen LED Wall Sconce Retrofit Kit.	REMPHOS - LEDSR-G2	4200	0.015	0.504	0.090	0.414	2,117	378	1,739
Housing Unit I	11	hallway	2LT8 4' vapor ceiling mount	13	1x4 2-Lamp F32Watt T8, Vaportight Fixture, SECURITY	8760	0.058	13	RETROFIT with a 24watt LED Strip Kit and electronic driver	LED LIVING - G2/CLARIS	8760	0.024	0.754	0.312	0.442	6,605	2,733	3,872

Building	Bldg ID	Location Detail	Notes	Pre Retrofit Fixture Qty	Pre-retrofit Description	Pre-Hours	Pre-Retrofit kW/Fixture	Post Retrofit Fixture Qty	Post Retrofit Description	Model Number	Post-Hours	Post Retrofit kW/Fixture	Existing kW	Proposed kW	kW Saved	Existing kWh	Proposed kWh	kWh Saved
Housing Unit I	11		emergency 1' drum w/ frosted lens	6	18 Watt CFL-PL 2pin Lamp, Cylinder/Drum	4200	0.018	6	RELAMP with a 8watt LED PL (Ballast Bypass) Lamp	KEYSTONE - KT	4200	0.008	0.108	0.048	0.060	454	202	252
Housing Unit I	11	telephone closet	cfl twist	2	22 Watt CFL Bulb with E26 Base	2000	0.022	2	RELAMP with a 9watt LED A19 Lamp	SYLVANIA - A19	2000	0.009	0.044	0.018	0.026	88	36	52
Housing Unit I	11	#105	2LT8 1' circuline drum	2	12" round 76watt CFL Circuline Drum, SECURITY	4200	0.076	2	RETROFIT with a 16watt, 2352Lumen LED Wall Sconce Retrofit Kit.	REMPHOS - LEDCR-G2	4200	0.016	0.152	0.032	0.120	638	134	504
Housing Unit I	11		cfl twist	1	22 Watt CFL Bulb with E26 Base	4200	0.022	1	RELAMP with a 9watt LED A19 Lamp	SYLVANIA - A19	4200	0.009	0.022	0.009	0.013	92	38	55
Housing Unit I	11	#110	2LT8 4' vapor	1	1x4 2-Lamp F32Watt T8, Vaportight Fixture, SECURITY	4200	0.058	1	RETROFIT with a 24watt LED Strip Kit and electronic driver	LED LIVING - G2/CLARIS	4200	0.024	0.058	0.024	0.034	244	101	143
Housing Unit I	11	#111	2LT8 1' circuline drum	2	12" round 76watt CFL Circuline Drum, SECURITY	4200	0.076	2	RETROFIT with a 16watt, 2352Lumen LED Wall Sconce Retrofit Kit.	REMPHOS - LEDCR-G2	4200	0.016	0.152	0.032	0.120	638	134	504
Housing Unit I	11	stairwell	2LT8 1' circuline drum	6	12" round 76watt CFL Circuline Drum, SECURITY	8760	0.076	6	RETROFIT with a 16watt, 2352Lumen LED Wall Sconce Retrofit Kit.	REMPHOS - LEDCR-G2	8760	0.016	0.456	0.096	0.360	3,995	841	3,154
Housing Unit I	11		emergency 1' drum w/ frosted lens	6	18 Watt CFL-PL 2pin Lamp, Cylinder/Drum	4200	0.018	6	RELAMP with a 8watt LED PL (Ballast Bypass) Lamp	KEYSTONE - KT	4200	0.008	0.108	0.048	0.060	454	202	252
Housing Unit I	11	#106	60w incandescent	1	60 watt Incandescent Screwin A19 Lamp	4200	0.060	1	RELAMP with a 9watt LED A19 Lamp	SYLVANIA - A19	4200	0.009	0.060	0.009	0.051	252	38	214
Housing Unit I	11	#101	60w incandescent	2	60 watt Incandescent Screwin A19 Lamp	4200	0.060	2	RELAMP with a 9watt LED A19 Lamp	SYLVANIA - A19	4200	0.009	0.120	0.018	0.102	504	76	428
Housing Unit I	11	Cells	2LT8 4' tamper proof vapor ceiling mount	21	1x4 2-Lamp F32Watt T8, Vaportight Fixture, SECURITY	4200	0.058	21	RETROFIT with a 24watt LED Strip Kit and electronic driver	LED LIVING - G2/CLARIS	4200	0.024	1.218	0.504	0.714	5,116	2,117	2,999
Housing Unit I	11	#205	cfl twist	1	22 Watt CFL Bulb with E26 Base	4200	0.022	1	RELAMP with a 9watt LED A19 Lamp	SYLVANIA - A19	4200	0.009	0.022	0.009	0.013	92	38	55
Housing Unit I	11	Basement	2LT8 1' circuline drum	6	12" round 76watt CFL Circuline Drum, SECURITY	4200	0.076	6	RETROFIT with a 16watt, 2352Lumen LED Wall Sconce Retrofit Kit.	REMPHOS - LEDCR-G2	4200	0.016	0.456	0.096	0.360	1,915	403	1,512
Housing Unit I	11		cfl twist	1	22 Watt CFL Bulb with E26 Base	4200	0.022	1	RELAMP with a 9watt LED A19 Lamp	SYLVANIA - A19	4200	0.009	0.022	0.009	0.013	92	38	55
Housing Unit I	11		4LT12 4' industrial pendent mount	10	1x4 4-Lamp F32Watt T8, Industrial Hood Fixture	4200	0.116	10	REPLACE with new 39watt LED Surface Wrap Fixtures	PHILIPS 1SDL	4200	0.039	1.160	0.390	0.770	4,872	1,638	3,234
Housing Unit I	11	#1004	emergency 1' drum w/ frosted lens	2	18 Watt CFL-PL 2pin Lamp, Cylinder/Drum	4200	0.018	2	RELAMP with a 8watt LED PL (Ballast Bypass) Lamp	KEYSTONE - KT	4200	0.008	0.036	0.016	0.020	151	67	84

Building	Bldg ID	Location Detail	Notes	Pre Retrofit Fixture Qty	Pre-retrofit Description	Pre-Hours	Pre-Retrofit kW/Fixture	Post Retrofit Fixture Qty	Post Retrofit Description	Model Number	Post-Hours	Post Retrofit kW/Fixture	Existing kW	Proposed kW	kW Saved	Existing kWh	Proposed kWh	kWh Saved
Housing Unit I	11		cfl twist	1	22 Watt CFL Bulb with E26 Base	4200	0.022	1	RELAMP with a 9watt LED A19 Lamp	SYLVANIA - A19	4200	0.009	0.022	0.009	0.013	92	38	55
Housing Unit I	11	Exterior	1x1 canopy	1	175watt HID Surface Mount Canopy Fixture	4380	0.192	1	REPLACE with new 60 watt LED Surface mount Canopy Fixtures at existing location	CREE - CPY250	3942	0.060	0.192	0.060	0.132	841	237	604
Housing Unit I	11		250w flood w/ adj arm	8	250watt HID Adjustable Flood Area Fixture	4380	0.300	8	REPLACE with a 86watt LED Adjustable Flood mounted at existing location	CREE - OSQ/AA	4380	0.086	2.400	0.688	1.712	10,512	3,013	7,499
Housing Unit I	11		75w incandescent	3	75 watt Incandescent Screwin A19 Lamp	4200	0.075	3	RELAMP with a 12 watt LED A19 Lamp	SYLVANIA - A19	4200	0.012	0.225	0.036	0.189	945	151	794
Housing Unit H	12	#106	2LT8 4' vapor	3	1x4 2-Lamp F32Watt T8, Vaportight Fixture, SECURITY	4200	0.058	3	RETROFIT with a 24watt LED Strip Kit and electronic driver	LED LIVING - G2/CLARIS	4200	0.024	0.174	0.072	0.102	731	302	428
Housing Unit H	12	Cells	2LT8 4' vapor	8	1x4 2-Lamp F32Watt T8, Vaportight Fixture, SECURITY	4200	0.058	8	RETROFIT with a 24watt LED Strip Kit and electronic driver	LED LIVING - G2/CLARIS	4200	0.024	0.464	0.192	0.272	1,949	806	1,142
Housing Unit H	12	#104	60w ceiling globe fixture	1	60 watt Incandescent Screwin A19 Lamp	4200	0.060	1	RELAMP with a 9watt LED A19 Lamp	SYLVANIA - A19	4200	0.009	0.060	0.009	0.051	252	38	214
Housing Unit H	12		60w ceiling square fixture	1	60 watt Incandescent Screwin A19 Lamp	4200	0.060	1	RELAMP with a 9watt LED A19 Lamp	SYLVANIA - A19	4200	0.009	0.060	0.009	0.051	252	38	214
Housing Unit H	12	#105	2LT8 4' vapor	3	1x4 2-Lamp F32Watt T8, Vaportight Fixture, SECURITY	4200	0.058	3	RETROFIT with a 24watt LED Strip Kit and electronic driver	LED LIVING - G2/CLARIS	4200	0.024	0.174	0.072	0.102	731	302	428
Housing Unit H	12	Hallway	2LT8 4' vapor	4	1x4 2-Lamp F32Watt T8, Vaportight Fixture, SECURITY	8760	0.058	4	RETROFIT with a 24watt LED Strip Kit and electronic driver	LED LIVING - G2/CLARIS	8760	0.024	0.232	0.096	0.136	2,032	841	1,191
Housing Unit H	12		emergency 1' drum w/ frosted lens	3	18 Watt CFL-PL 2pin Lamp, Cylinder/Drum	4200	0.018	3	RELAMP with a 8watt LED PL (Ballast Bypass) Lamp	KEYSTONE - KT	4200	0.008	0.054	0.024	0.030	227	101	126
Housing Unit H	12	#103	2LT8 1' circuline drum	4	12" round 76watt CFL Circuline Drum, SECURITY	4200	0.076	4	RETROFIT with a 16watt, 2352Lumen LED Wall Sconce Retrofit Kit.	REMPHOS - LEDCR-G2	4200	0.016	0.304	0.064	0.240	1,277	269	1,008
Housing Unit H	12		emergency 1' drum w/ frosted lens	1	18 Watt CFL-PL 2pin Lamp, Cylinder/Drum	4200	0.018	1	RELAMP with a 8watt LED PL (Ballast Bypass) Lamp	KEYSTONE - KT	4200	0.008	0.018	0.008	0.010	76	34	42
Housing Unit H	12	stairwells	2LT9 1' circuline drum	4	12" round 76watt CFL Circuline Drum, SECURITY	8760	0.076	4	RETROFIT with a 16watt, 2352Lumen LED Wall Sconce Retrofit Kit.	REMPHOS - LEDCR-G2	8760	0.016	0.304	0.064	0.240	2,663	561	2,102
Housing Unit H	12	#101	2LT8 4' wrap	3	1x4 2-Lamp F32Watt T8, Surface Wraparound Fixture, SECURITY	4200	0.058	3	RETROFIT with a 24watt LED Strip Kit and electronic driver	LED LIVING - G2/CLARIS	4200	0.024	0.174	0.072	0.102	731	302	428
Housing Unit H	12	#102	75w incandescent	1	75 watt Incandescent Screwin A19 Lamp	4200	0.075	1	RELAMP with a 12 watt LED A19 Lamp	SYLVANIA - A19	4200	0.012	0.075	0.012	0.063	315	50	265

Building	Bldg ID	Location Detail	Notes	Pre Retrofit Fixture Qty	Pre-retrofit Description	Pre-Hours	Pre-Retrofit kW/Fixture	Post Retrofit Fixture Qty	Post Retrofit Description	Model Number	Post-Hours	Post Retrofit kW/Fixture	Existing kW	Proposed kW	kW Saved	Existing kWh	Proposed kWh	kWh Saved
Housing Unit H	12	2nd floor hallway	2LT8 4' vapor	5	1x4 2-Lamp F32Watt T8, Vaportight Fixture, SECURITY	8760	0.058	5	RETROFIT with a 24watt LED Strip Kit and electronic driver	LED LIVING - G2/CLARIS	8760	0.024	0.290	0.120	0.170	2,540	1,051	1,489
Housing Unit H	12		emergency 1' drum w/ frosted lens	3	18 Watt CFL-PL 2pin Lamp, Cylinder/Drum	4200	0.018	3	RELAMP with a 8watt LED PL (Ballast Bypass) Lamp	KEYSTONE - KT	4200	0.008	0.054	0.024	0.030	227	101	126
Housing Unit H	12	Cells	2LT8 4' vapor tamper proof ceiling surface mount	19	1x4 2-Lamp F32Watt T8, Vaportight Fixture, SECURITY	4200	0.058	19	RETROFIT with a 24watt LED Strip Kit and electronic driver	LED LIVING - G2/CLARIS	4200	0.024	1.102	0.456	0.646	4,628	1,915	2,713
Housing Unit H	12	#202	2LT8 1' circuline drum	2	12" round 76watt CFL Circuline Drum, SECURITY	4200	0.076	2	RETROFIT with a 16watt, 2352Lumen LED Wall Sconce Retrofit Kit.	REMPHOS - LEDCR-G2	4200	0.016	0.152	0.032	0.120	638	134	504
Housing Unit H	12	G030	2LT8 4' wrap	2	1x4 2-Lamp F32Watt T8, Surface Wraparound Fixture, SECURITY	4200	0.058	2	RETROFIT with a 24watt LED Strip Kit and electronic driver	LED LIVING - G2/CLARIS	4200	0.024	0.116	0.048	0.068	487	202	286
Housing Unit H	12	attic	no lights	0	Already Efficient	4200	0.000	0.1	No Work	N/A	4200	0.000	0.000	0.000	0.000	0	0	0
Housing Unit H	12	G201	CFL twist	2	22 Watt CFL Bulb with E26 Base	4200	0.022	2	RELAMP with a 9watt LED A19 Lamp	SYLVANIA - A19	4200	0.009	0.044	0.018	0.026	185	76	109
Housing Unit H	12	Basement	2LT8 4' metal wrap	8	1x4 2-Lamp F32Watt T8, Surface Wraparound Fixture, SECURITY	4200	0.058	8	RETROFIT with a 24watt LED Strip Kit and electronic driver	LED LIVING - G2/CLARIS	4200	0.024	0.464	0.192	0.272	1,949	806	1,142
Housing Unit H	12	stairs	2LT8 1' circuline drum	1	12" round 76watt CFL Circuline Drum, SECURITY	4200	0.076	1	RETROFIT with a 16watt, 2352Lumen LED Wall Sconce Retrofit Kit.	REMPHOS - LEDCR-G2	4200	0.016	0.076	0.016	0.060	319	67	252
Housing Unit H	12	Exterior	175w HPS 1x1 canopy	2	175watt HID Surface Mount Canopy Fixture	4380	0.192	2	REPLACE with new 60 watt LED Surface mount Canopy Fixtures at existing location	CREE - CPY250	3942	0.060	0.384	0.120	0.264	1,682	473	1,209
Housing Unit H	12		250w MH flood w/ adj arm	5	250watt HID Adjustable Flood Area Fixture	4380	0.300	5	REPLACE with a 86watt LED Adjustable Flood mounted at existing location	CREE - OSQ/AA	4380	0.086	1.500	0.430	1.070	6,570	1,883	4,687
Housing Unit G	13	#106	2LT8 4' vapor	3	1x4 2-Lamp F32Watt T8, Vaportight Fixture, SECURITY	4200	0.058	3	RETROFIT with a 24watt LED Strip Kit and electronic driver	LED LIVING - G2/CLARIS	4200	0.024	0.174	0.072	0.102	731	302	428
Housing Unit G	13	Cells	2LT8 4' vapor	8	1x4 2-Lamp F32Watt T8, Vaportight Fixture, SECURITY	4200	0.058	8	RETROFIT with a 24watt LED Strip Kit and electronic driver	LED LIVING - G2/CLARIS	4200	0.024	0.464	0.192	0.272	1,949	806	1,142
Housing Unit G	13	#104	60w ceiling globe fixture	1	60 watt Incandescent Screwin A19 Lamp	4200	0.060	1	RELAMP with a 9watt LED A19 Lamp	SYLVANIA - A19	4200	0.009	0.060	0.009	0.051	252	38	214
Housing Unit G	13		60w ceiling square fixture	1	60 watt Incandescent Screwin A19 Lamp	4200	0.060	1	RELAMP with a 9watt LED A19 Lamp	SYLVANIA - A19	4200	0.009	0.060	0.009	0.051	252	38	214
Housing Unit G	13	#105	2LT8 4' vapor	3	1x4 2-Lamp F32Watt T8, Vaportight Fixture, SECURITY	4200	0.058	3	RETROFIT with a 24watt LED Strip Kit and electronic driver	LED LIVING - G2/CLARIS	4200	0.024	0.174	0.072	0.102	731	302	428

Building	Bldg ID	Location Detail	Notes	Pre Retrofit Fixture Qty	Pre-retrofit Description	Pre-Hours	Pre-Retrofit kW/Fixture	Post Retrofit Fixture Qty	Post Retrofit Description	Model Number	Post-Hours	Post Retrofit kW/Fixture	Existing kW	Proposed kW	kW Saved	Existing kWh	Proposed kWh	kWh Saved
Housing Unit G	13	Hallway	2LT8 4' vapor	4	1x4 2-Lamp F32Watt T8, Vaportight Fixture, SECURITY	8760	0.058	4	RETROFIT with a 24watt LED Strip Kit and electronic driver	LED LIVING - G2/CLARIS	8760	0.024	0.232	0.096	0.136	2,032	841	1,191
Housing Unit G	13		emergency 1' drum w/ frosted lens	3	18 Watt CFL-PL 2pin Lamp, Cylinder/Drum	4200	0.018	3	RELAMP with a 8watt LED PL (Ballast Bypass) Lamp	KEYSTONE - KT	4200	0.008	0.054	0.024	0.030	227	101	126
Housing Unit G	13	#103	2LT8 1' circuline drum	4	12" round 76watt CFL Circuline Drum, SECURITY	4200	0.076	4	RETROFIT with a 16watt, 2352Lumen LED Wall Sconce Retrofit Kit.	REMPHOS - LEDCR-G2	4200	0.016	0.304	0.064	0.240	1,277	269	1,008
Housing Unit G	13		emergency 1' drum w/ frosted lens	1	18 Watt CFL-PL 2pin Lamp, Cylinder/Drum	4200	0.018	1	RELAMP with a 8watt LED PL (Ballast Bypass) Lamp	KEYSTONE - KT	4200	0.008	0.018	0.008	0.010	76	34	42
Housing Unit G	13	stairwells	2LT9 1' circuline drum	4	12" round 76watt CFL Circuline Drum, SECURITY	8760	0.076	4	RETROFIT with a 16watt, 2352Lumen LED Wall Sconce Retrofit Kit.	REMPHOS - LEDCR-G2	8760	0.016	0.304	0.064	0.240	2,663	561	2,102
Housing Unit G	13	#101	2LT8 4' wrap	3	1x4 2-Lamp F32Watt T8, Surface Wraparound Fixture, SECURITY	4200	0.058	3	RETROFIT with a 24watt LED Strip Kit and electronic driver	LED LIVING - G2/CLARIS	4200	0.024	0.174	0.072	0.102	731	302	428
Housing Unit G	13	#102	75w incandescent	1	75 watt Incandescent Screwin A19 Lamp	4200	0.075	1	RELAMP with a 12 watt LED A19 Lamp	SYLVANIA - A19	4200	0.012	0.075	0.012	0.063	315	50	265
Housing Unit G	13	2nd floor hallway	2LT8 4' vapor	5	1x4 2-Lamp F32Watt T8, Vaportight Fixture, SECURITY	8760	0.058	5	RETROFIT with a 24watt LED Strip Kit and electronic driver	LED LIVING - G2/CLARIS	8760	0.024	0.290	0.120	0.170	2,540	1,051	1,489
Housing Unit G	13		emergency 1' drum w/ frosted lens	3	18 Watt CFL-PL 2pin Lamp, Cylinder/Drum	4200	0.018	3	RELAMP with a 8watt LED PL (Ballast Bypass) Lamp	KEYSTONE - KT	4200	0.008	0.054	0.024	0.030	227	101	126
Housing Unit G	13	Cells	2LT8 4' vapor tamper proof ceiling surface mount	19	1x4 2-Lamp F32Watt T8, Vaportight Fixture, SECURITY	4200	0.058	19	RETROFIT with a 24watt LED Strip Kit and electronic driver	LED LIVING - G2/CLARIS	4200	0.024	1.102	0.456	0.646	4,628	1,915	2,713
Housing Unit G	13	#202	2LT8 1' circuline drum	2	12" round 76watt CFL Circuline Drum, SECURITY	4200	0.076	2	RETROFIT with a 16watt, 2352Lumen LED Wall Sconce Retrofit Kit.	REMPHOS - LEDCR-G2	4200	0.016	0.152	0.032	0.120	638	134	504
Housing Unit G	13	G030	2LT8 4' wrap	2	1x4 2-Lamp F32Watt T8, Surface Wraparound Fixture, SECURITY	4200	0.058	2	RETROFIT with a 24watt LED Strip Kit and electronic driver	LED LIVING - G2/CLARIS	4200	0.024	0.116	0.048	0.068	487	202	286
Housing Unit G	13	attic	no lights	0	Already Efficient	4200	0.000	0.1	No Work	N/A	4200	0.000	0.000	0.000	0.000	0	0	0
Housing Unit G	13	G201	CFL twist	2	22 Watt CFL Bulb with E26 Base	4200	0.022	2	RELAMP with a 9watt LED A19 Lamp	SYLVANIA - A19	4200	0.009	0.044	0.018	0.026	185	76	109
Housing Unit G	13	Basement	2LT8 4' metal wrap	8	1x4 2-Lamp F32Watt T8, Surface Wraparound Fixture, SECURITY	4200	0.058	8	RETROFIT with a 24watt LED Strip Kit and electronic driver	LED LIVING - G2/CLARIS	4200	0.024	0.464	0.192	0.272	1,949	806	1,142
Housing Unit G	13	stairs	2LT8 1' circuline drum	1	12" round 76watt CFL Circuline Drum, SECURITY	4200	0.076	1	RETROFIT with a 16watt, 2352Lumen LED Wall Sconce Retrofit Kit.	REMPHOS - LEDCR-G2	4200	0.016	0.076	0.016	0.060	319	67	252

Building	Bldg ID	Location Detail	Notes	Pre Retrofit Fixture Qty	Pre-retrofit Description	Pre-Hours	Pre-Retrofit kW/Fixture	Post Retrofit Fixture Qty	Post Retrofit Description	Model Number	Post-Hours	Post Retrofit kW/Fixture	Existing kW	Proposed kW	kW Saved	Existing kWh	Proposed kWh	kWh Saved
Housing Unit G	13	Exterior	175w HPS 1x1 canopy	2	175watt HID Surface Mount Canopy Fixture	4380	0.192	2	REPLACE with new 60 watt LED Surface mount Canopy Fixtures at existing location	CREE - CPY250	3942	0.060	0.384	0.120	0.264	1,682	473	1,209
Housing Unit G	13		250w MH flood w/ adj arm	5	250watt HID Adjustable Flood Area Fixture	4380	0.300	5	REPLACE with a 86watt LED Adjustable Flood mounted at existing location	CREE - OSQ/AA	4380	0.086	1.500	0.430	1.070	6,570	1,883	4,687
Power Plant	14	Power Plant		4	175watt HID Surface Mount Canopy Fixture	4380	0.192	4	REPLACE with new 60 watt LED Surface mount Canopy Fixtures at existing location	CREE - CPY250	4380	0.060	0.768	0.240	0.528	3,364	1,051	2,313
Power Plant	14	general area	30'-35' ceiling; DIFFICULT REACH	14	250watt HID Surface Mount Canopy Fixture	4380	0.300	14	REPLACE with new 85 watt LED Surface mount Canopy Fixtures at existing location	CREE - CPY250	4380	0.085	4.200	1.190	3.010	18,396	5,212	13,184
Power Plant	14		250w HID circular fixture	33	250watt HID Pendant Mounted Lowbay/Highbay	4200	0.300	33	REPLACE with a 85watt LED Round Highbay on existing pendant	FAILSAFE - FHL	4200	0.085	9.900	2.805	7.095	41,580	11,781	29,799
Power Plant	14		2LT12 4' industrial	1	1x4 2-Lamp F40Watt T12, Industrial Hood Fixture	4200	0.072	1	REPLACE with new 39watt LED Surface Wrap Fixtures	PHILIPS 1SDL	4200	0.039	0.072	0.039	0.033	302	164	139
Power Plant	14		2LT12 4' metal wrap	4	1x4 2-Lamp F40/34Watt T12, Surface Mount Fixture	4200	0.072	4	REPLACE with new 39watt LED Surface Wrap Fixtures	PHILIPS 1SDL	4200	0.039	0.288	0.156	0.132	1,210	655	554
Power Plant	14	---> cove lighting in machinery	1LT12 4' strip	2	1x4 fixture with (1) F40watt T12 and (1) Normal Power Factor Ballast	4200	0.036	2	(1) 14watt LED-T8 Rotatable Lamps and (1) new electronic driver. Clean and drywipe existing fixture	PHILIPS - INSTANTFIT	4200	0.015	0.072	0.030	0.042	302	126	176
Power Plant	14	#108	2LT8 4' metal wrap ceiling surface mount	4	1x4 2-Lamp F32Watt T8, Surface Wraparound Fixture	4200	0.058	4	REPLACE with new 39watt LED Surface Wrap Fixtures	PHILIPS 1SDL	4200	0.039	0.232	0.156	0.076	974	655	319
Power Plant	14	#107	2LT8 4' metal wrap ceiling surface mount	2	1x4 2-Lamp F32Watt T8, Surface Wraparound Fixture	4200	0.058	2	REPLACE with new 39watt LED Surface Wrap Fixtures	PHILIPS 1SDL	4200	0.039	0.116	0.078	0.038	487	328	160
Power Plant	14	#106	75w incandescent	1	75 watt Incandescent Screwin A19 Lamp	4200	0.075	1	RELAMP with a 12 watt LED A19 Lamp	SYLVANIA - A19	4200	0.012	0.075	0.012	0.063	315	50	265
Power Plant	14	#104	2LT8U 2x2 parabolic	2	2x2 2U-Lamp F31Watt T8, Recessed Troffer	4200	0.056	2	REPLACE with a new 24watt 2x2 LED Volumetric Dimming Kit	MOBERN - RKDISE	4200	0.024	0.112	0.048	0.064	470	202	269
Power Plant	14	stairs	75w incandescent	2	75 watt Incandescent Screwin A19 Lamp	4200	0.075	2	RELAMP with a 12 watt LED A19 Lamp	SYLVANIA - A19	4200	0.012	0.150	0.024	0.126	630	101	529
Power Plant	14	Exterior	250w MH flood w/ adj arm	6	250watt HID Adjustable Flood Area Fixture	4380	0.300	6	REPLACE with a 86watt LED Adjustable Flood mounted at existing location	CREE - OSQ/AA	3942	0.086	1.800	0.516	1.284	7,884	2,034	5,850
Power Plant	14		250w MH shoebox wallpack trunnion mount	5	250watt HID Adjustable Flood Area Fixture	4380	0.300	5	REPLACE with a 86watt LED Adjustable Flood mounted at existing location	CREE - OSQ/AA	4380	0.086	1.500	0.430	1.070	6,570	1,883	4,687
Power Plant	14		100w cfl slender sconce	3	84Watt CFL Wall Sconce Slender Fixture	4200	0.084	3	RETROFIT with a 15watt, 2130Lumen LED Wall Sconce Retrofit Kit.	REMPHOS - LEDSR-G2	4200	0.015	0.252	0.045	0.207	1,058	189	869

Building	Bldg ID	Location Detail	Notes	Pre Retrofit Fixture Qty	Pre-retrofit Description	Pre-Hours	Pre-Retrofit kW/Fixture	Post Retrofit Fixture Qty	Post Retrofit Description	Model Number	Post-Hours	Post Retrofit kW/Fixture	Existing kW	Proposed kW	kW Saved	Existing kWh	Proposed kWh	kWh Saved
Power Plant	14		75w jelly jar	1	75 watt Incandescent Screwin A19 Lamp	4200	0.075	1	RELAMP with a 12 watt LED A19 Lamp	SYLVANIA - A19	4200	0.012	0.075	0.012	0.063	315	50	265
Education	15	Hallway	4LT8 4' parabolic wrap pendent mount	7	1x4 4-Lamp F32Watt T8, Surface Wrap Fixture	8760	0.116	7	REPLACE with new 39watt LED Surface Wrap Fixtures	PHILIPS 1SDL	8760	0.039	0.812	0.273	0.539	7,113	2,391	4,722
Education	15		2LT8 4' wrap pendent mount	1	1x4 2-Lamp F32Watt T8, Surface Wraparound Fixture	4200	0.058	1	REPLACE with new 39watt LED Surface Wrap Fixtures	PHILIPS 1SDL	4200	0.039	0.058	0.039	0.019	244	164	80
Education	15	restrooms	2LT8 1' circuline drum	3	12" round 76watt CFL Circuline Drum, SECURITY	4200	0.076	3	RETROFIT with a 16watt, 2352Lumen LED Wall Sconce Retrofit Kit.	REMPHOS - LEDCR-G2	4200	0.016	0.228	0.048	0.180	958	202	756
Education	15	closets	2LT8 1' circuline drum	2	12" round 76watt CFL Circuline Drum, SECURITY	4200	0.076	2	RETROFIT with a 16watt, 2352Lumen LED Wall Sconce Retrofit Kit.	REMPHOS - LEDCR-G2	2730	0.016	0.152	0.032	0.120	638	87	551
Education	15	#111	4LT8 2x4 troffer drop ceiling	2	2x4 4-Lamp F32Watt T8, Recessed Troffer	4200	0.116	2	REPLACE with a new 32watt 2x4 LED Volumetric Dimming Kit	MOBERN - RKDISE	4200	0.032	0.232	0.064	0.168	974	269	706
Education	15	#117	4LT8 2x4 troffer drop ceiling	4	2x4 4-Lamp F32Watt T8, Recessed Troffer	4200	0.116	4	REPLACE with a new 32watt 2x4 LED Volumetric Dimming Kit	MOBERN - RKDISE	4200	0.032	0.464	0.128	0.336	1,949	538	1,411
Education	15	#119	4LT8 2x4 troffer drop ceiling	8	2x4 4-Lamp F32Watt T8, Recessed Troffer	4200	0.116	8	REPLACE with a new 32watt 2x4 LED Volumetric Dimming Kit	MOBERN - RKDISE	4200	0.032	0.928	0.256	0.672	3,898	1,075	2,822
Education	15	#121	4LT8 2x4 troffer drop ceiling	7	2x4 4-Lamp F32Watt T8, Recessed Troffer	4200	0.116	7	REPLACE with a new 32watt 2x4 LED Volumetric Dimming Kit	MOBERN - RKDISE	4200	0.032	0.812	0.224	0.588	3,410	941	2,470
Education	15	#120	4LT8 2x4 troffer drop ceiling	6	2x4 4-Lamp F32Watt T8, Recessed Troffer	4200	0.116	6	REPLACE with a new 32watt 2x4 LED Volumetric Dimming Kit	MOBERN - RKDISE	4200	0.032	0.696	0.192	0.504	2,923	806	2,117
Education	15	#118	4LT8 2x4 troffer drop ceiling	6	2x4 4-Lamp F32Watt T8, Recessed Troffer	4200	0.116	6	REPLACE with a new 32watt 2x4 LED Volumetric Dimming Kit	MOBERN - RKDISE	4200	0.032	0.696	0.192	0.504	2,923	806	2,117
Education	15	#116	4LT8 2x4 troffer drop ceiling	6	2x4 4-Lamp F32Watt T8, Recessed Troffer	4200	0.116	6	REPLACE with a new 32watt 2x4 LED Volumetric Dimming Kit	MOBERN - RKDISE	4200	0.032	0.696	0.192	0.504	2,923	806	2,117
Education	15	#110	4LT8 2x4 troffer drop ceiling	6	2x4 4-Lamp F32Watt T8, Recessed Troffer	4200	0.116	6	REPLACE with a new 32watt 2x4 LED Volumetric Dimming Kit	MOBERN - RKDISE	4200	0.032	0.696	0.192	0.504	2,923	806	2,117
Education	15	#109	4LT8 2x4 troffer drop ceiling	6	2x4 4-Lamp F32Watt T8, Recessed Troffer	4200	0.116	6	REPLACE with a new 32watt 2x4 LED Volumetric Dimming Kit	MOBERN - RKDISE	4200	0.032	0.696	0.192	0.504	2,923	806	2,117
Education	15	#107	4LT8 2x4 troffer drop ceiling	4	2x4 4-Lamp F32Watt T8, Recessed Troffer	4200	0.116	4	REPLACE with a new 32watt 2x4 LED Volumetric Dimming Kit	MOBERN - RKDISE	4200	0.032	0.464	0.128	0.336	1,949	538	1,411
Education	15	#105	4LT8 2x4 troffer drop ceiling	12	2x4 4-Lamp F32Watt T8, Recessed Troffer	4200	0.116	12	REPLACE with a new 32watt 2x4 LED Volumetric Dimming Kit	MOBERN - RKDISE	4200	0.032	1.392	0.384	1.008	5,846	1,613	4,234

Building	Bldg ID	Location Detail	Notes	Pre Retrofit Fixture Qty	Pre-retrofit Description	Pre-Hours	Pre-Retrofit kW/Fixture	Post Retrofit Fixture Qty	Post Retrofit Description	Model Number	Post-Hours	Post Retrofit kW/Fixture	Existing kW	Proposed kW	kW Saved	Existing kWh	Proposed kWh	kWh Saved
Education	15	#108	4LT8 2x4 troffer drop ceiling	11	2x4 4-Lamp F32Watt T8, Recessed Troffer	4200	0.116	11	REPLACE with a new 32watt 2x4 LED Volumetric Dimming Kit	MOBERN - RKDISE	4200	0.032	1.276	0.352	0.924	5,359	1,478	3,881
Education	15		2LT8 4' wrap	3	1x4 2-Lamp F32Watt T8, Surface Wraparound Fixture	4200	0.058	3	REPLACE with new 39watt LED Surface Wrap Fixtures	PHILIPS 1SDL	4200	0.039	0.174	0.117	0.057	731	491	239
Education	15		2LT8U 2x2 troffer drop ceiling	1	2x2 2U-Lamp F31Watt T8, Recessed Troffer	4200	0.056	1	REPLACE with a new 24watt 2x2 LED Volumetric Dimming Kit	MOBERN - RKDISE	4200	0.024	0.056	0.024	0.032	235	101	134
Education	15	#106	4LT8 2x4 troffer drop ceiling	17	2x4 4-Lamp F32Watt T8, Recessed Troffer	4200	0.116	17	REPLACE with a new 32watt 2x4 LED Volumetric Dimming Kit	MOBERN - RKDISE	4200	0.032	1.972	0.544	1.428	8,282	2,285	5,998
Education	15	#104	4LT8 2x4 troffer drop ceiling	14	2x4 4-Lamp F32Watt T8, Recessed Troffer	4200	0.116	14	REPLACE with a new 32watt 2x4 LED Volumetric Dimming Kit	MOBERN - RKDISE	4200	0.032	1.624	0.448	1.176	6,821	1,882	4,939
Education	15	vestibule	1x1 recessed down fixture	1	1' x 1' 100watt HID Recessed Canopy Fixture	4380	0.120	1	RETROFIT with new 30 watt LED Round Module Kit inside existing fixture aperture	GLOBAL TECH - MINI21	4380	0.030	0.120	0.030	0.090	526	131	394
Education	15	#103 Library	4LT8 2x4 troffer drop ceiling	30	2x4 4-Lamp F32Watt T8, Recessed Troffer	4200	0.116	30	REPLACE with a new 32watt 2x4 LED Volumetric Dimming Kit	MOBERN - RKDISE	4200	0.032	3.480	0.960	2.520	14,616	4,032	10,584
Education	15	Hallway	4LT12 2x4 troffer drop ceiling	4	2x4 4-Lamp F40Watt T12, Recessed Prismatic	8760	0.144	4	REPLACE with a new 32watt 2x4 LED Volumetric Dimming Kit	MOBERN - RKDISE	8760	0.032	0.576	0.128	0.448	5,046	1,121	3,924
Education	15		4LT12 4' parabolic wrap	5	1x4 4-Lamp F32Watt T8, Surface Wrap Fixture	4200	0.116	5	REPLACE with new 39watt LED Surface Wrap Fixtures	PHILIPS 1SDL	4200	0.039	0.580	0.195	0.385	2,436	819	1,617
Education	15	Exterior	175w HPS 1x1 canopy	2	175watt HID Surface Mount Canopy Fixture	4380	0.192	2	REPLACE with new 60 watt LED Surface mount Canopy Fixtures at existing location	CREE - CPY250	3942	0.060	0.384	0.120	0.264	1,682	473	1,209
Education	15		250w MH wallpack	1	250watt HID Flushmount Wallpack Fixture	4380	0.295	1	REPLACE with new 85 watt LED Flushmount Wallpack Fixtures at existing location	CREE - C-WP-A	4380	0.085	0.295	0.085	0.210	1,292	372	920
Storeroom	16	Officer dining room	2LT8 2x4 prismatic troffer drop ceiling	2	2x4 2-Lamp F32Watt T8, Recessed Troffer	4200	0.058	2	REPLACE with a new 22watt 2x4 LED Volumetric Dimming Kit	MOBERN - RKDISE	2730	0.022	0.116	0.044	0.072	487	120	367
Storeroom	16	Dining room	2LT8 2x4 prismatic troffer drop ceiling	18	2x4 2-Lamp F32Watt T8, Recessed Troffer	4200	0.058	18	REPLACE with a new 22watt 2x4 LED Volumetric Dimming Kit	MOBERN - RKDISE	2730	0.022	1.044	0.396	0.648	4,385	1,081	3,304
Storeroom	16	#111	2LT8 1' circuline drum	1	12" round 76watt CFL Circuline Drum Surface mount Fixture	4200	0.076	1	REPLACE with new 15", 30 watt LED SECURITY Surface mount Round Fixtures at existing location	FAILSAFE - TR	4200	0.020	0.076	0.020	0.056	319	84	235
Storeroom	16	#110	2LT8 2x4 prismatic troffer drop ceiling	1	2x4 2-Lamp F32Watt T8, Recessed Troffer	4200	0.058	1	REPLACE with a new 22watt 2x4 LED Volumetric Dimming Kit	MOBERN - RKDISE	4200	0.022	0.058	0.022	0.036	244	92	151
Storeroom	16	Store room	250w HID pendent mount	6	250watt HID Pendant Mounted Lowbay/Highbay	2000	0.300	6	REPLACE with a 85watt LED Round Highbay on existing pendant	FAILSAFE - FHL	1300	0.085	1.800	0.510	1.290	3,600	663	2,937

Building	Bldg ID	Location Detail	Notes	Pre Retrofit Fixture Qty	Pre-retrofit Description	Pre-Hours	Pre-Retrofit kW/Fixture	Post Retrofit Fixture Qty	Post Retrofit Description	Model Number	Post-Hours	Post Retrofit kW/Fixture	Existing kW	Proposed kW	kW Saved	Existing kWh	Proposed kWh	kWh Saved
Storeroom	16		75w incandescent in china hat	1	75 watt Incandescent Screwin A19 Lamp	4200	0.075	1	RELAMP with a 12 watt LED A19 Lamp	SYLVANIA - A19	4200	0.012	0.075	0.012	0.063	315	50	265
Storeroom	16	Commissary	250w HID pendent mount	2	250watt HID Pendant Mounted Lowbay/Highbay	4200	0.300	2	REPLACE with a 85watt LED Round Highbay on existing pendant	FAILSAFE - FHL	4200	0.085	0.600	0.170	0.430	2,520	714	1,806
Storeroom	16		75w incandescent in china hat	12	75 watt Incandescent Screwin A19 Lamp	4200	0.075	12	RELAMP with a 12 watt LED A19 Lamp	SYLVANIA - A19	4200	0.012	0.900	0.144	0.756	3,780	605	3,175
Storeroom	16		2LT8 4' parabolic wrap pendent mount	2	1x4 2-Lamp F32Watt T8, Surface Wraparound Fixture	4200	0.058	2	REPLACE with new 39watt LED Surface Wrap Fixtures	PHILIPS 1SDL	4200	0.039	0.116	0.078	0.038	487	328	160
Storeroom	16	#124	CFL twist	1	22 Watt CFL Bulb with E26 Base	4200	0.022	1	RELAMP with a 9watt LED A19 Lamp	SYLVANIA - A19	4200	0.009	0.022	0.009	0.013	92	38	55
Storeroom	16	ODR hallway	2LT8U 2x2 prismatic troffer drop ceiling	3	2x2 2U-Lamp F31Watt T8, Recessed Troffer	8760	0.056	3	REPLACE with a new 24watt 2x2 LED Volumetric Dimming Kit	MOBERN - RKDISE	8760	0.024	0.168	0.072	0.096	1,472	631	841
Laundry	17	Exterior vestibule	100w HPS 1x1 canopy	2	100watt HID Surface Mount Canopy Fixture	4380	0.120	2	REPLACE with new 31 watt LED Surface mount Canopy Fixtures at existing location	CREE - CPY250	4380	0.031	0.240	0.062	0.178	1,051	272	780
Laundry	17	Main work area	250w MH pendent mount	8	250watt HID Pendant Mounted Lowbay/Highbay	4200	0.300	8	REPLACE with a 85watt LED Round Highbay on existing pendant	FAILSAFE - FHL	4200	0.085	2.400	0.680	1.720	10,080	2,856	7,224
Laundry	17		2LT8 4' vapor ceiling surface mount	1	1x4 2-Lamp F32Watt T8, Vaportight Fixture, SECURITY	4200	0.058	1	RETROFIT with a 24watt LED Strip Kit and electronic driver	LED LIVING - G2/CLARIS	4200	0.024	0.058	0.024	0.034	244	101	143
Laundry	17		2LT8 4' industrial wall arm mount	1	1x4 2-Lamp F32Watt T8, Industrial Hood Fixture	4200	0.058	1	REPLACE with new 39watt LED Surface Wrap Fixtures	PHILIPS 1SDL	4200	0.039	0.058	0.039	0.019	244	164	80
Laundry	17		75w incandescent	1	75 watt Incandescent Screwin A19 Lamp	4200	0.075	1	RELAMP with a 12 watt LED A19 Lamp	SYLVANIA - A19	4200	0.012	0.075	0.012	0.063	315	50	265
Laundry	17	Basement	175w MH 2' diameter drum pendent mount	10	175watt HID Pendant Mount 2' Round Drum Fixture	4200	0.192	10	REPLACE with new 60 watt LED Pendant mount Canopy Fixtures at existing location	CREE - CPY250	4200	0.060	1.920	0.600	1.320	8,064	2,520	5,544
Laundry	17		3LT8 4' industrial chain mount	2	1x4 3-Lamp F32Watt T8, Industrial Hood Fixture	4200	0.084	2	REPLACE with new 39watt LED Surface Wrap Fixtures	PHILIPS 1SDL	4200	0.039	0.168	0.078	0.090	706	328	378
Laundry	17		2LT8 4' metal wrap chain mount	4	1x4 2-Lamp F32Watt T8, Surface Wraparound Fixture	4200	0.058	4	REPLACE with new 39watt LED Surface Wrap Fixtures	PHILIPS 1SDL	4200	0.039	0.232	0.156	0.076	974	655	319
Laundry	17		2LT8 4' vapor ceiling surface mount	1	1x4 2-Lamp F32Watt T8, Vaportight Fixture, SECURITY	4200	0.058	1	RETROFIT with a 24watt LED Strip Kit and electronic driver	LED LIVING - G2/CLARIS	4200	0.024	0.058	0.024	0.034	244	101	143
Laundry	17	---> office	4LT8 2x4 troffer drop ceiling	6	2x4 4-Lamp F32Watt T8, Recessed Troffer	4200	0.116	6	REPLACE with a new 32watt 2x4 LED Volumetric Dimming Kit	MOBERN - RKDISE	2730	0.032	0.696	0.192	0.504	2,923	524	2,399

Building	Bldg ID	Location Detail	Notes	Pre Retrofit Fixture Qty	Pre-retrofit Description	Pre-Hours	Pre-Retrofit kW/Fixture	Post Retrofit Fixture Qty	Post Retrofit Description	Model Number	Post-Hours	Post Retrofit kW/Fixture	Existing kW	Proposed kW	kW Saved	Existing kWh	Proposed kWh	kWh Saved
Laundry	17	---> inmate restroom	60w incandescent in vent	1	60 watt Incandescent Screwin A19 Lamp	4200	0.060	1	RELAMP with a 9watt LED A19 Lamp	SYLVANIA - A19	4200	0.009	0.060	0.009	0.051	252	38	214
Laundry	17	Shop	4LT8 2x4 troffer ceiling flush mount	22	2x4 4-Lamp F32Watt T8, Recessed Troffer	4200	0.116	22	REPLACE with a new 32watt 2x4 LED Volumetric Dimming Kit	MOBERN - RKDISE	4200	0.032	2.552	0.704	1.848	10,718	2,957	7,762
Laundry	17		2LT8 4' metal wrap ceiling flush mount	35	1x4 2-Lamp F32Watt T8, Surface Wraparound Fixture	4200	0.058	35	REPLACE with new 39watt LED Surface Wrap Fixtures	PHILIPS 1SDL	4200	0.039	2.030	1.365	0.665	8,526	5,733	2,793
Laundry	17		75w incandescent	13	75 watt Incandescent Screwin A19 Lamp	4200	0.075	13	RELAMP with a 12 watt LED A19 Lamp	SYLVANIA - A19	4200	0.012	0.975	0.156	0.819	4,095	655	3,440
Laundry	17		4LT8 4' wrap pendent mount	15	1x4 4-Lamp F32Watt T8, Surface Wrap Fixture	4200	0.116	15	REPLACE with new 39watt LED Surface Wrap Fixtures	PHILIPS 1SDL	4200	0.039	1.740	0.585	1.155	7,308	2,457	4,851
Laundry	17		3LT8 4' industrial pendent mount	1	1x4 3-Lamp F32Watt T8, Industrial Hood Fixture	4200	0.084	1	REPLACE with new 39watt LED Surface Wrap Fixtures	PHILIPS 1SDL	4200	0.039	0.084	0.039	0.045	353	164	189
Laundry	17	stairwell	2LT8 1' circuline drum	1	12" round 76watt CFL Circuline Drum, SECURITY	8760	0.076	1	RETROFIT with a 16watt, 2352Lumen LED Wall Sconce Retrofit Kit.	REMPHOS - LEDCR-G2	8760	0.016	0.076	0.016	0.060	666	140	526
Laundry	17		75w incandescent	1	75 watt Incandescent Screwin A19 Lamp	4200	0.075	1	RELAMP with a 12 watt LED A19 Lamp	SYLVANIA - A19	4200	0.012	0.075	0.012	0.063	315	50	265
Laundry	17		emergency w/ 2-headed flood	1	2-Headed 75 Watt Perimeter Wall Flood	8760	0.150	1	RELAMP with (2) 19 watt LED PAR Lamps	SYLVANIA - PAR	8760	0.038	0.150	0.038	0.112	1,314	333	981
Laundry	17	Boiler room	3LT8 4' industrial chain mount	3	1x4 3-Lamp F32Watt T8, Industrial Hood Fixture	2000	0.084	3	REPLACE with new 39watt LED Surface Wrap Fixtures	PHILIPS 1SDL	2000	0.039	0.252	0.117	0.135	504	234	270
Laundry	17	men's	4LT8 4' wrap pendent mount	1	1x4 4-Lamp F32Watt T8, Surface Wrap Fixture	4200	0.116	1	REPLACE with new 39watt LED Surface Wrap Fixtures	PHILIPS 1SDL	4200	0.039	0.116	0.039	0.077	487	164	323
Laundry	17	women's	75w incandescent	1	75 watt Incandescent Screwin A19 Lamp	4200	0.075	1	RELAMP with a 12 watt LED A19 Lamp	SYLVANIA - A19	4200	0.012	0.075	0.012	0.063	315	50	265
Laundry	17	Ladder room	2LT8 1' circuline drum	1	12" round 76watt CFL Circuline Drum, SECURITY	4200	0.076	1	RETROFIT with a 16watt, 2352Lumen LED Wall Sconce Retrofit Kit.	REMPHOS - LEDCR-G2	4200	0.016	0.076	0.016	0.060	319	67	252
Laundry	17	#008	2LT8 4' industrial pendent mount	12	1x4 2-Lamp F32Watt T8, Industrial Hood Fixture	4200	0.058	12	REPLACE with new 39watt LED Surface Wrap Fixtures	PHILIPS 1SDL	4200	0.039	0.696	0.468	0.228	2,923	1,966	958
Laundry	17	#016 high voltage room	75w incandescent	1	75 watt Incandescent Screwin A19 Lamp	2000	0.075	1	RELAMP with a 12 watt LED A19 Lamp	SYLVANIA - A19	2000	0.012	0.075	0.012	0.063	150	24	126
Central Kitchen	18	Hallway	2LT8 2x4 prismatic troffer drop ceiling	3	2x4 2-Lamp F32Watt T8, Recessed Troffer	8760	0.058	3	REPLACE with a new 22watt 2x4 LED Volumetric Dimming Kit	MOBERN - RKDISE	8760	0.022	0.174	0.066	0.108	1,524	578	946

Building	Bldg ID	Location Detail	Notes	Pre Retrofit Fixture Qty	Pre-retrofit Description	Pre-Hours	Pre-Retrofit kW/Fixture	Post Retrofit Fixture Qty	Post Retrofit Description	Model Number	Post-Hours	Post Retrofit kW/Fixture	Existing kW	Proposed kW	kW Saved	Existing kWh	Proposed kWh	kWh Saved
Central Kitchen	18	Kitchen	2LT8U 2x2 prismatic troffer drop ceiling	35	2x2 2U-Lamp F31Watt T8, Recessed Troffer	4200	0.056	35	REPLACE with a new 24watt 2x2 LED Volumetric Dimming Kit	MOBERN - RKDISE	4200	0.024	1.960	0.840	1.120	8,232	3,528	4,704
Central Kitchen	18		emergency 1' drum w/ frosted lens	4	18 Watt CFL-PL 2pin Lamp, Cylinder/Drum	4200	0.018	4	RELAMP with a 8watt LED PL (Ballast Bypass) Lamp	KEYSTONE - KT	4200	0.008	0.072	0.032	0.040	302	134	168
Central Kitchen	18	Back Kitchen	2LT8U 2x2 prismatic troffer drop ceiling	7	2x2 2U-Lamp F31Watt T8, Recessed Troffer	4200	0.056	7	REPLACE with a new 24watt 2x2 LED Volumetric Dimming Kit	MOBERN - RKDISE	4200	0.024	0.392	0.168	0.224	1,646	706	941
Central Kitchen	18		2LT8 2x4 prismatic troffer drop ceiling	37	2x4 2-Lamp F32Watt T8, Recessed Troffer	4200	0.058	37	REPLACE with a new 22watt 2x4 LED Volumetric Dimming Kit	MOBERN - RKDISE	4200	0.022	2.146	0.814	1.332	9,013	3,419	5,594
Central Kitchen	18		75w incandescent in jelly jar	18	75 watt Incandescent Screwin A19 Lamp	4200	0.075	18	RELAMP with a 12 watt LED A19 Lamp	SYLVANIA - A19	4200	0.012	1.350	0.216	1.134	5,670	907	4,763
Central Kitchen	18	Tool room	1LT8 4' strip	1	1x4 fixture with (1) F32watt T8 and (1) Normal Power Factor Ballast	4200	0.029	1	(1) 14watt LED-T8 Rotatable Lamps and (1) new electronic driver. Clean and drywipe existing fixture	PHILIPS - INSTANTFIT	4200	0.015	0.029	0.015	0.014	122	63	59
Central Kitchen	18	Back vestibule	2LT8 4' metal wrap	1	1x4 2-Lamp F32Watt T8, Surface Wraparound Fixture	8760	0.058	1	REPLACE with new 39watt LED Surface Wrap Fixtures	PHILIPS 1SDL	8760	0.039	0.058	0.039	0.019	508	342	166
Central Kitchen	18	Restroom	2LT8 2x4 prismatic troffer ceiling surface mount	1	2x4 2-Lamp F32Watt T8, Recessed Troffer	4200	0.058	1	REPLACE with a new 22watt 2x4 LED Volumetric Dimming Kit	MOBERN - RKDISE	4200	0.022	0.058	0.022	0.036	244	92	151
Central Kitchen	18	Exterior	250w shoebox wall pack	6	250watt HID Flushmount Wallpack Fixture	4380	0.295	6	REPLACE with new 85 watt LED Flushmount Wallpack Fixtures at existing location	CREE - C-WP-A	3942	0.085	1.770	0.510	1.260	7,753	2,010	5,742
Central Kitchen	18		6" down can	1	42 Watt CFL Downlight, 6" round	4200	0.042	1	RETROFIT with a 13watt LED Downlight Module Kit [SYLVANIA RT6HO] with 8" adapter when applicable	SYLVANIA - RT6HO	4200	0.013	0.042	0.013	0.029	176	55	122
Central Kitchen	18	open bays	75w incandescent in sockets	4	75 watt Incandescent Screwin A19 Lamp	4200	0.075	4	RELAMP with a 12 watt LED A19 Lamp	SYLVANIA - A19	4200	0.012	0.300	0.048	0.252	1,260	202	1,058
Central Kitchen	18		250w flood w/ adj arm	2	250watt HID Adjustable Flood Area Fixture	4380	0.300	2	REPLACE with a 86watt LED Adjustable Flood mounted at existing location	CREE - OSQ/AA	4380	0.086	0.600	0.172	0.428	2,628	753	1,875
Building #21 - Slaughter House	21	Building #21 - Slaughter House	HID CFL high bay	2	252watt CFL Pendant Mounted Lowbay/Highbay	4200	0.252	2	REPLACE with a 85watt LED Round Highbay on existing pendant	FAILSAFE - FHL	4200	0.085	0.504	0.170	0.334	2,117	714	1,403
Building #21 - Slaughter House	21		4LT8 2x4 troffer surface ceiling mount	2	2x4 4-Lamp F32Watt T8, SECURITY	4200	0.116	2	RETROFIT with a 2x4 40watt, 4800Lumen LED Troffer Retrofit Kit.	SYLVANIA - LEDVANCE/LEDR	4200	0.048	0.232	0.096	0.136	974	403	571
Building #21 - Slaughter House	21		2LT8 1x4 troffer surface ceiling mount	2	1x4 2-Lamp F32Watt T8, Surface Wraparound Fixture	4200	0.058	2	REPLACE with new 39watt LED Surface Wrap Fixtures	PHILIPS 1SDL	4200	0.039	0.116	0.078	0.038	487	328	160
Building #21 - Slaughter House	21		75w incandescent in china hat	2	75 watt Incandescent Screwin A19 Lamp	4200	0.075	2	RELAMP with a 12 watt LED A19 Lamp	SYLVANIA - A19	4200	0.012	0.150	0.024	0.126	630	101	529

Building	Bldg ID	Location Detail	Notes	Pre Retrofit Fixture Qty	Pre-retrofit Description	Pre-Hours	Pre-Retrofit kW/Fixture	Post Retrofit Fixture Qty	Post Retrofit Description	Model Number	Post-Hours	Post Retrofit kW/Fixture	Existing kW	Proposed kW	kW Saved	Existing kWh	Proposed kWh	kWh Saved
Building #21 - Slaughter House	21	Exterior	250w MH flood w/ adj arm	3	250watt HID Adjustable Flood Area Fixture	4380	0.300	3	REPLACE with a 86watt LED Adjustable Flood mounted at existing location	CREE - OSQ/AA	3942	0.086	0.900	0.258	0.642	3,942	1,017	2,925
Building #22 - Vehicle Sally Port	22		400w MH wallpack trunnion mount	5	400watt HID Adjustable Flood Fixture	4380	0.455	5	REPLACE with a 130watt LED Flood mounted at existing location	CREE - OSQ/AA	4380	0.130	2.275	0.650	1.625	9,965	2,847	7,118
Building #22 - Vehicle Sally Port	22	interior	8" down can 100w MH	6	42 Watt CFL Downlight, 6" round	4200	0.042	6	RETROFIT with a 13watt LED Downlight Module Kit [SYLVANIA RT6HO] with 8" adapter when applicable	SYLVANIA - RT6HO	4200	0.013	0.252	0.078	0.174	1,058	328	731
Building #22 - Vehicle Sally Port	22		2LT8 4' metal wrap	12	1x4 2-Lamp F32Watt T8, Surface Wraparound Fixture	4200	0.058	12	REPLACE with new 39watt LED Surface Wrap Fixtures	PHILIPS 1SDL	4200	0.039	0.696	0.468	0.228	2,923	1,966	958
Building #22 - Vehicle Sally Port	22		cfl twist	2	22 Watt CFL Bulb with E26 Base	4200	0.022	2	RELAMP with a 9watt LED A19 Lamp	SYLVANIA - A19	4200	0.009	0.044	0.018	0.026	185	76	109
Building #23 - Horse Barn	23	Building #23 - Horse Barn	75w incandescent in socket	15	75 watt Incandescent Screwin A19 Lamp	4200	0.075	15	RELAMP with a 12 watt LED A19 Lamp	SYLVANIA - A19	4200	0.012	1.125	0.180	0.945	4,725	756	3,969
Building #25 - Farm Office - C.I. Storage	25	Building #25 - Farm Office - C.I. Storage	4LT12 4' parabolic wrap ceiling mount	1	1x4 4-Lamp F32Watt T8, Surface Wrap Fixture	4200	0.116	1	REPLACE with new 39watt LED Surface Wrap Fixtures	PHILIPS 1SDL	4200	0.039	0.116	0.039	0.077	487	164	323
Building #25 - Farm Office - C.I. Storage	25		2LT8 1' circuline drum	1	12" round 76watt CFL Circuline Drum Surface mount Fixture	4200	0.076	1	REPLACE with new 15", 30 watt LED SECURITY Surface mount Round Fixtures at existing location	FAILSAFE - TR	4200	0.020	0.076	0.020	0.056	319	84	235
Building #25 - Farm Office - C.I. Storage	25		75w incandescent in china hat	1	75 watt Incandescent Screwin A19 Lamp	4200	0.075	1	RELAMP with a 12 watt LED A19 Lamp	SYLVANIA - A19	4200	0.012	0.075	0.012	0.063	315	50	265
Building #25 - Farm Office - C.I. Storage	25	Exterior	narrow sconce 75w incandescent	4	75watt HID Flushmount Wallpack Fixture	4380	0.075	4	REPLACE with new 12 watt LED SECURITY Wallpack Fixtures at existing location	FAILSAFE - B95	3942	0.012	0.300	0.048	0.252	1,314	189	1,125
Building #25 - Farm Office - C.I. Storage	25		250w wallpack	1	250watt HID Flushmount Wallpack Fixture	4380	0.295	1	REPLACE with new 85 watt LED Flushmount Wallpack Fixtures at existing location	CREE - C-WP-A	4380	0.085	0.295	0.085	0.210	1,292	372	920
Building #25 - Farm Office - C.I. Storage	25		75w incandescent in jelly jar	1	75 watt Incandescent Screwin A19 Lamp	4200	0.075	1	RELAMP with a 12 watt LED A19 Lamp	SYLVANIA - A19	4200	0.012	0.075	0.012	0.063	315	50	265
Building #25 - Farm Office - C.I. Storage	25		barn light	2	250watt HID Adjustable Flood Area Fixture	4380	0.300	2	REPLACE with a 86watt LED Adjustable Flood mounted at existing location	CREE - OSQ/AA	4380	0.086	0.600	0.172	0.428	2,628	753	1,875
Building #31 - Old Sewage Treatment Plant	31	Building #31 - Old Sewage Treatment Plant	250w MH pendent mount	1	250watt HID Pendant Mounted Lowbay/Highbay	4200	0.300	1	REPLACE with a 85watt LED Round Highbay on existing pendant	FAILSAFE - FHL	4200	0.085	0.300	0.085	0.215	1,260	357	903
Building #33 - CERT Building	33		2lT8 2x4 prismatic troffer drop ceiling	28	2x4 2-Lamp F32Watt T8, Recessed Troffer	4200	0.058	28	REPLACE with a new 22watt 2x4 LED Volumetric Dimming Kit	MOBERN - RKDISE	4200	0.022	1.624	0.616	1.008	6,821	2,587	4,234
Building #33 - CERT Building	33	mech. Closet	2LT8 4' wrap	1	1x4 2-Lamp F32Watt T8, Surface Wraparound Fixture	2000	0.058	1	REPLACE with new 39watt LED Surface Wrap Fixtures	PHILIPS 1SDL	2000	0.039	0.058	0.039	0.019	116	78	38

Building	Bldg ID	Location Detail	Notes	Pre Retrofit Fixture Qty	Pre-retrofit Description	Pre-Hours	Pre-Retrofit kW/Fixture	Post Retrofit Fixture Qty	Post Retrofit Description	Model Number	Post-Hours	Post Retrofit kW/Fixture	Existing kW	Proposed kW	kW Saved	Existing kWh	Proposed kWh	kWh Saved
Building #33 - CERT Building	33	Exterior	250w MH wallpack trunnion mount	1	250watt HID Adjustable Flood Area Fixture	4380	0.300	1	REPLACE with a 86watt LED Adjustable Flood mounted at existing location	CREE - OSQ/AA	3942	0.086	0.300	0.086	0.214	1,314	339	975
Building #33 - CERT Building	33		100w MH narrow wallpack	2	100watt HID Flushmount Wallpack Fixture	4380	0.120	2	REPLACE with new 30 watt LED SECURITY Wallpack Fixtures at existing location	FAILSAFE - G12	4380	0.030	0.240	0.060	0.180	1,051	263	788
Building #34 - Pole Shed - Heavy Equip	34	Building #34 - Pole Shed - Heavy Equip	250w MH circular canopy	3	250watt HID Surface Mount Canopy Fixture	4380	0.300	3	REPLACE with new 85 watt LED Surface mount Canopy Fixtures at existing location	CREE - CPY250	4380	0.085	0.900	0.255	0.645	3,942	1,117	2,825
Building #34 - Pole Shed - Heavy Equip	34	Building #34 - Pole Shed - Heavy Equip	75w incandescent in socket	4	75 watt Incandescent Screwin A19 Lamp	4200	0.075	4	RELAMP with a 12 watt LED A19 Lamp	SYLVANIA - A19	4200	0.012	0.300	0.048	0.252	1,260	202	1,058
Building #37 - Tractor & Lan Equip Shed	37	Building #37 - Tractor & Lan Equip Shed	400w MH wallpack trunnion mount	1	400watt HID Adjustable Flood Fixture	4380	0.455	1	REPLACE with a 130watt LED Flood mounted at existing location	CREE - OSQ/AA	4380	0.130	0.455	0.130	0.325	1,993	569	1,424
Building #43 - Potato Storage	43	Building #43 - Potato Storage	75w incandescent in socket	14	75 watt Incandescent Screwin A19 Lamp	4200	0.075	14	RELAMP with a 12 watt LED A19 Lamp	SYLVANIA - A19	4200	0.012	1.050	0.168	0.882	4,410	706	3,704
Building #44 - Pole Type Beef Barn	44	Building #44 - Pole Type Beef Barn	75w incandescent in socket	15	75 watt Incandescent Screwin A19 Lamp	4200	0.075	15	RELAMP with a 12 watt LED A19 Lamp	SYLVANIA - A19	4200	0.012	1.125	0.180	0.945	4,725	756	3,969
Building #46 - Main Electric Vault	46	Building #46 - Main Electric Vault	75w incandescent in china hat	4	75 watt Incandescent Screwin A19 Lamp	4200	0.075	4	RELAMP with a 12 watt LED A19 Lamp	SYLVANIA - A19	4200	0.012	0.300	0.048	0.252	1,260	202	1,058
Housing Unit B	49	common area	4LT8 2x4 prismatic drop ceiling	18	2x4 4-Lamp F32Watt T8, SECURITY	4200	0.116	18	RETROFIT with a 2x4 40watt, 4800Lumen LED Troffer Retrofit Kit.	SYLVANIA - LEDVANCE/LEDR	4200	0.048	2.088	0.864	1.224	8,770	3,629	5,141
Housing Unit B	49		2LT8U 2x2 prismatic drop ceiling	4	2x2 2U-Lamp F31Watt T8, Recessed Troffer	4200	0.056	4	REPLACE with a new 24watt 2x2 LED Volumetric Dimming Kit	MOBERN - RKDISE	4200	0.024	0.224	0.096	0.128	941	403	538
Housing Unit B	49		emergency down can 8"	8	2-18 Watt CFL Downlight, 6" round , SECURITY	8760	0.036	8	RELAMP with (2) 8watt LED PL (Ballast Bypass) Lamp	KEYSTONE - KT	8760	0.016	0.288	0.128	0.160	2,523	1,121	1,402
Housing Unit B	49		4LT8 2x4 prismatic drop ceiling	52	2x4 4-Lamp F32Watt T8, SECURITY	4200	0.116	52	RETROFIT with a 2x4 40watt, 4800Lumen LED Troffer Retrofit Kit.	SYLVANIA - LEDVANCE/LEDR	4200	0.048	6.032	2.496	3.536	25,334	10,483	14,851
Housing Unit B	49		cylinder sconces could be emergency light	4	100Watt Inc/Hal Wall Sconce Fixture	4200	0.100	4	RETROFIT with a 15watt, 2130Lumen LED Wall Sconce Retrofit Kit.	REMPHOS - LEDSR-G2	4200	0.015	0.400	0.060	0.340	1,680	252	1,428
Housing Unit B	49	middle hallway	2LT8 1x4 prismatic troffer drop ceiling	4	1x4 2-Lamp F32Watt T8 Recessed Troffer, SECURITY	8760	0.058	4	RETROFIT with a 2x4 27watt, 3200Lumen LED Troffer Retrofit Kit.	SYLVANIA - LEDVANCE/LEDR	8760	0.027	0.232	0.108	0.124	2,032	946	1,086
Housing Unit B	49	#105	2LT8 2x4 prismatic troffer drop ceiling	6	2x4 2-Lamp F32Watt T8, SECURITY Fixture	4200	0.058	6	RETROFIT with a 2x4 27watt, 3200Lumen LED Troffer Retrofit Kit.	SYLVANIA - LEDVANCE/LEDR	4200	0.027	0.348	0.162	0.186	1,462	680	781
Housing Unit B	49	Cells BB-side	2LT8 1x4 prismatic tamper proof troffer recessed dry wall	48	1x4 2-Lamp F32Watt T8 Recessed Troffer, SECURITY	4200	0.058	48	RETROFIT with a 2x4 27watt, 3200Lumen LED Troffer Retrofit Kit.	SYLVANIA - LEDVANCE/LEDR	4200	0.027	2.784	1.296	1.488	11,693	5,443	6,250

Building	Bldg ID	Location Detail	Notes	Pre Retrofit Fixture Qty	Pre-retrofit Description	Pre-Hours	Pre-Retrofit kW/Fixture	Post Retrofit Fixture Qty	Post Retrofit Description	Model Number	Post-Hours	Post Retrofit kW/Fixture	Existing kW	Proposed kW	kW Saved	Existing kWh	Proposed kWh	kWh Saved
Housing Unit B	49	2nd floor offices	4LT8 2x4 prismatic drop ceiling	8	2x4 4-Lamp F32Watt T8, SECURITY	4200	0.116	8	RETROFIT with a 2x4 40watt, 4800Lumen LED Troffer Retrofit Kit.	SYLVANIA - LEDVANCE/LEDR	2730	0.048	0.928	0.384	0.544	3,898	1,048	2,849
Housing Unit B	49	Exterior	175w HPS 1x1 canopy	5	175watt HID Surface Mount Canopy Fixture	4380	0.192	5	REPLACE with new 60 watt LED Surface mount Canopy Fixtures at existing location	CREE - CPY250	3942	0.060	0.960	0.300	0.660	4,205	1,183	3,022
Housing Unit B	49		250w MH 3/4 lens wall pack	1	250watt HID Flushmount Wallpack Fixture	4380	0.295	1	REPLACE with new 85 watt LED Flushmount Wallpack Fixtures at existing location	CREE - C-WP-A	4380	0.085	0.295	0.085	0.210	1,292	372	920
Housing Unit B	49	Back storage	2LT8 4' industrial pendent mount	12	1x4 2-Lamp F32Watt T8, Industrial Hood Fixture	4200	0.058	12	REPLACE with new 39watt LED Surface Wrap Fixtures	PHILIPS 1SDL	2730	0.039	0.696	0.468	0.228	2,923	1,278	1,646
Housing Unit B	49	Open area	2LT8 1x4 prismatic troffer in plaster (trailer roof) ceiling	128	1x4 2-Lamp F32Watt T8 Recessed Troffer, SECURITY	4200	0.058	128	RETROFIT with a 2x4 27watt, 3200Lumen LED Troffer Retrofit Kit.	SYLVANIA - LEDVANCE/LEDR	4200	0.027	7.424	3.456	3.968	31,181	14,515	16,666
Housing Unit B	49		1x1 sconce night light cfl-pil	8	13 Watt CFL-PL 2pin Lamp, Nightlight	4200	0.013	8	RELAMP with a 6watt LED PL (Ballast Bypass) Lamp	KEYSTONE - KT	4200	0.006	0.104	0.048	0.056	437	202	235
Housing Unit B	49	restroom	2LT8 4' wrap	14	1x4 2-Lamp F32Watt T8, Surface Wraparound Fixture, SECURITY	4200	0.058	14	RETROFIT with a 24watt LED Strip Kit and electronic driver	LED LIVING - G2/CLARIS	4200	0.024	0.812	0.336	0.476	3,410	1,411	1,999
Housing Unit B	49	open game room	2LT8 4' wrap	42	1x4 2-Lamp F32Watt T8, Surface Wraparound Fixture, SECURITY	4200	0.058	42	RETROFIT with a 24watt LED Strip Kit and electronic driver	LED LIVING - G2/CLARIS	4200	0.024	2.436	1.008	1.428	10,231	4,234	5,998
Housing Unit B	49	Exterior	narrow cfl sconce	9	75watt HID Flushmount Wallpack Fixture	4380	0.075	9	REPLACE with new 12 watt LED SECURITY Wallpack Fixtures at existing location	FAILSAFE - B95	3942	0.012	0.675	0.108	0.567	2,957	426	2,531
Building #52 - Water Filtration Plant	52	Office	3LT8 2x4 prismatic drop ceiling	3	2x4 3-Lamp F32Watt T8, Recessed Troffer	4200	0.084	3	REPLACE with a new 32watt 2x4 LED Volumetric Dimming Kit	MOBERN - RKDISE	2730	0.032	0.252	0.096	0.156	1,058	262	796
Building #52 - Water Filtration Plant	52	Plant open area	2LT8 4' vapor ceiling surface mount drywall	2	1x4 2-Lamp F32Watt T8, Vaportight Fixture, SECURITY	4200	0.058	2	RETROFIT with a 24watt LED Strip Kit and electronic driver	LED LIVING - G2/CLARIS	4200	0.024	0.116	0.048	0.068	487	202	286
Building #52 - Water Filtration Plant	52		4LT8 8' vapor ceiling surface mount drywall	24	1x4 2-Lamp F32Watt T8, Vaportight Fixture, SECURITY	4200	0.058	24	RETROFIT with a 24watt LED Strip Kit and electronic driver	LED LIVING - G2/CLARIS	4200	0.024	1.392	0.576	0.816	5,846	2,419	3,427
Building #52 - Water Filtration Plant	52	restroom	3LT8 2x4 prismatic drop ceiling	1	2x4 3-Lamp F32Watt T8, Recessed Troffer	4200	0.084	1	REPLACE with a new 32watt 2x4 LED Volumetric Dimming Kit	MOBERN - RKDISE	4200	0.032	0.084	0.032	0.052	353	134	218
Building #52 - Water Filtration Plant	52	Exterior	100w MH narrow wallpack	2	100watt HID Flushmount Wallpack Fixture	4380	0.120	2	REPLACE with new 30 watt LED SECURITY Wallpack Fixtures at existing location	FAILSAFE - G12	3942	0.030	0.240	0.060	0.180	1,051	237	815
Building #52 - Water Filtration Plant	52		6" down can 100w MH	4	100watt HID Recessed Canopy Fixture, 6" round	4200	0.120	4	RETROFIT with a 13watt LED Downlight Module Kit [SYLVANIA RT6HO] with 8" adapter when applicable	SYLVANIA - RT6HO	4200	0.013	0.480	0.052	0.428	2,016	218	1,798
Building #53 - Parenting Mod	53	exterior	4LT8 2x4 prismatic troffer drop ceiling	35	2x4 4-Lamp F32Watt T8, Recessed Troffer	4380	0.116	35	REPLACE with a new 32watt 2x4 LED Volumetric Dimming Kit	MOBERN - RKDISE	3942	0.032	4.060	1.120	2.940	17,783	4,415	13,368

Building	Bldg ID	Location Detail	Notes	Pre Retrofit Fixture Qty	Pre-retrofit Description	Pre-Hours	Pre-Retrofit kW/Fixture	Post Retrofit Fixture Qty	Post Retrofit Description	Model Number	Post-Hours	Post Retrofit kW/Fixture	Existing kW	Proposed kW	kW Saved	Existing kWh	Proposed kWh	kWh Saved
Building #53 - Parenting Mod	53		narrow cfl sconce	3	75watt HID Flushmount Wallpack Fixture	4380	0.075	3	REPLACE with new 12 watt LED SECURITY Wallpack Fixtures at existing location	FAILSAFE - B95	4380	0.012	0.225	0.036	0.189	986	158	828
Housing Unit R	67	vestibule	4LT8 2x4 prismatic troffer drop ceiling	2	2x4 4-Lamp F32Watt T8, SECURITY	4200	0.116	2	RETROFIT with a 2x4 40watt, 4800Lumen LED Troffer Retrofit Kit.	SYLVANIA - LEDVANCE/LEDR	4200	0.048	0.232	0.096	0.136	974	403	571
Housing Unit R	67	#A101	3LT8 2x4 parabolic troffer drop ceiling	2	2x4 3-Lamp F32Watt T8, SECURITY Fixture	4200	0.084	2	RETROFIT with a 2x4 27watt, 3200Lumen LED Troffer Retrofit Kit.	SYLVANIA - LEDVANCE/LEDR	4200	0.027	0.168	0.054	0.114	706	227	479
Housing Unit R	67	#A200	3LT8 2x4 parabolic troffer drop ceiling	2	2x4 3-Lamp F32Watt T8, SECURITY Fixture	4200	0.084	2	RETROFIT with a 2x4 27watt, 3200Lumen LED Troffer Retrofit Kit.	SYLVANIA - LEDVANCE/LEDR	4200	0.027	0.168	0.054	0.114	706	227	479
Housing Unit R	67	Common area	4LT8 2x4 prismatic troffer drop ceiling	7	2x4 4-Lamp F32Watt T8, SECURITY	4200	0.116	7	RETROFIT with a 2x4 40watt, 4800Lumen LED Troffer Retrofit Kit.	SYLVANIA - LEDVANCE/LEDR	4200	0.048	0.812	0.336	0.476	3,410	1,411	1,999
Housing Unit R	67		2LT8 4' metal tamper proof wrap	18	1x4 2-Lamp F32Watt T8, Surface Wraparound Fixture, SECURITY	4200	0.058	18	RETROFIT with a 24watt LED Strip Kit and electronic driver	LED LIVING - G2/CLARIS	4200	0.024	1.044	0.432	0.612	4,385	1,814	2,570
Housing Unit R	67		100w MH 2x2 drop ceiling	14	2x2 100watt HID Recessed Highbay	4200	0.120	14	RETROFIT with a 2x2 26watt, 3200Lumen LED Troffer Retrofit Kit.	SYLVANIA - LEDVANCE/LEDR	4200	0.026	1.680	0.364	1.316	7,056	1,529	5,527
Housing Unit R	67	--->restroom stalls	100w MH 1x1 square surface mount	16	100watt HID Surface Mount Canopy Fixture - SECURITY FIXTURE	4380	0.120	16	REPLACE with new 20 watt LED SECURITY Surface mount Canopy Fixtures at existing location	FAILSAFE - G12	4380	0.020	1.920	0.320	1.600	8,410	1,402	7,008
Housing Unit R	67	Cells	2LT8 4' metal tamper proof vapor	64	1x4 2-Lamp F32Watt T8, Vaportight Fixture, SECURITY	4200	0.058	64	RETROFIT with a 24watt LED Strip Kit and electronic driver	LED LIVING - G2/CLARIS	4200	0.024	3.712	1.536	2.176	15,590	6,451	9,139
Housing Unit R	67	#A109	4LT8 2x4 prismatic troffer drop ceiling	2	2x4 4-Lamp F32Watt T8, SECURITY	4200	0.116	2	RETROFIT with a 2x4 40watt, 4800Lumen LED Troffer Retrofit Kit.	SYLVANIA - LEDVANCE/LEDR	4200	0.048	0.232	0.096	0.136	974	403	571
Housing Unit R	67	#A110	4LT8 2x4 prismatic troffer drop ceiling	3	2x4 4-Lamp F32Watt T8, SECURITY	4200	0.116	3	RETROFIT with a 2x4 40watt, 4800Lumen LED Troffer Retrofit Kit.	SYLVANIA - LEDVANCE/LEDR	4200	0.048	0.348	0.144	0.204	1,462	605	857
Housing Unit R	67	#A108	2LT8 4' vanity wrap	1	1x4 2-Lamp F32Watt T8, Vaportight Fixture, SECURITY	4200	0.058	1	RETROFIT with a 24watt LED Strip Kit and electronic driver	LED LIVING - G2/CLARIS	4200	0.024	0.058	0.024	0.034	244	101	143
Housing Unit R	67	Watch tower	1x1 1L CFL twist	7	26 Watt CFL Bulb with E26 Base	4200	0.026	7	RELAMP with a 9watt LED A19 Lamp	SYLVANIA - A19	4200	0.009	0.182	0.063	0.119	764	265	500
Housing Unit R	67	#A206	2LT8 4'idustrial	5	1x4 2-Lamp F32Watt T8, Industrial Hood Fixture	4200	0.058	5	REPLACE with new 39watt LED Surface Wrap Fixtures	PHILIPS 1SDL	4200	0.039	0.290	0.195	0.095	1,218	819	399
Housing Unit R	67	Exterior	250wMH shoebox wall pack trunnion mount	16	250watt HID Adjustable Flood Area Fixture	4380	0.300	16	REPLACE with a 86watt LED Adjustable Flood mounted at existing location	CREE - OSQ/AA	3942	0.086	4.800	1.376	3.424	21,024	5,424	15,600
Housing Unit R	67		100w door sconce	1	100Watt Inc/Hal Wall Sconce Fixture	4200	0.100	1	RETROFIT with a 15watt, 2130Lumen LED Wall Sconce Retrofit Kit.	REMPHOS - LEDSR-G2	4200	0.015	0.100	0.015	0.085	420	63	357

Building	Bldg ID	Location Detail	Notes	Pre Retrofit Fixture Qty	Pre-retrofit Description	Pre-Hours	Pre-Retrofit kW/Fixture	Post Retrofit Fixture Qty	Post Retrofit Description	Model Number	Post-Hours	Post Retrofit kW/Fixture	Existing kW	Proposed kW	kW Saved	Existing kWh	Proposed kWh	kWh Saved
Housing Unit J	68	vestibule	4LT8 2x4 prismatic troffer drop ceiling	2	2x4 4-Lamp F32Watt T8, SECURITY	4200	0.116	2	RETROFIT with a 2x4 40watt, 4800Lumen LED Troffer Retrofit Kit.	SYLVANIA - LEDVANCE/LEDR	4200	0.048	0.232	0.096	0.136	974	403	571
Housing Unit J	68	#A101	3LT8 2x4 parabolic troffer drop ceiling	2	2x4 3-Lamp F32Watt T8, SECURITY Fixture	4200	0.084	2	RETROFIT with a 2x4 27watt, 3200Lumen LED Troffer Retrofit Kit.	SYLVANIA - LEDVANCE/LEDR	4200	0.027	0.168	0.054	0.114	706	227	479
Housing Unit J	68	#A200	3LT8 2x4 parabolic troffer drop ceiling	2	2x4 3-Lamp F32Watt T8, SECURITY Fixture	4200	0.084	2	RETROFIT with a 2x4 27watt, 3200Lumen LED Troffer Retrofit Kit.	SYLVANIA - LEDVANCE/LEDR	4200	0.027	0.168	0.054	0.114	706	227	479
Housing Unit J	68	Common area	4LT8 2x4 prismatic troffer drop ceiling	7	2x4 4-Lamp F32Watt T8, SECURITY	4200	0.116	7	RETROFIT with a 2x4 40watt, 4800Lumen LED Troffer Retrofit Kit.	SYLVANIA - LEDVANCE/LEDR	4200	0.048	0.812	0.336	0.476	3,410	1,411	1,999
Housing Unit J	68		2LT8 4' metal tamper proof wrap	18	1x4 2-Lamp F32Watt T8, Surface Wraparound Fixture, SECURITY	4200	0.058	18	RETROFIT with a 24watt LED Strip Kit and electronic driver	LED LIVING - G2/CLARIS	4200	0.024	1.044	0.432	0.612	4,385	1,814	2,570
Housing Unit J	68		100w MH 2x2 drop ceiling	14	2x2 100watt HID Recessed Highbay	4200	0.120	14	RETROFIT with a 2x2 26watt, 3200Lumen LED Troffer Retrofit Kit.	SYLVANIA - LEDVANCE/LEDR	4200	0.026	1.680	0.364	1.316	7,056	1,529	5,527
Housing Unit J	68	--->restroom stalls	100w MH 1x1 square surface mount	16	100watt HID Surface Mount Canopy Fixture - SECURITY FIXTURE	4380	0.120	16	REPLACE with new 20 watt LED SECURITY Surface mount Canopy Fixtures at existing location	FAILSAFE - G12	4380	0.020	1.920	0.320	1.600	8,410	1,402	7,008
Housing Unit J	68	Cells	2LT8 4' metal tamper proof vapor	64	1x4 2-Lamp F32Watt T8, Vaportight Fixture, SECURITY	4200	0.058	64	RETROFIT with a 24watt LED Strip Kit and electronic driver	LED LIVING - G2/CLARIS	4200	0.024	3.712	1.536	2.176	15,590	6,451	9,139
Housing Unit J	68	#A109	4LT8 2x4 prismatic troffer drop ceiling	2	2x4 4-Lamp F32Watt T8, SECURITY	4200	0.116	2	RETROFIT with a 2x4 40watt, 4800Lumen LED Troffer Retrofit Kit.	SYLVANIA - LEDVANCE/LEDR	4200	0.048	0.232	0.096	0.136	974	403	571
Housing Unit J	68	#A110	4LT8 2x4 prismatic troffer drop ceiling	3	2x4 4-Lamp F32Watt T8, SECURITY	4200	0.116	3	RETROFIT with a 2x4 40watt, 4800Lumen LED Troffer Retrofit Kit.	SYLVANIA - LEDVANCE/LEDR	4200	0.048	0.348	0.144	0.204	1,462	605	857
Housing Unit J	68	#A108	2LT8 4' vanity wrap	1	1x4 2-Lamp F32Watt T8, Vaportight Fixture, SECURITY	4200	0.058	1	RETROFIT with a 24watt LED Strip Kit and electronic driver	LED LIVING - G2/CLARIS	4200	0.024	0.058	0.024	0.034	244	101	143
Housing Unit J	68	Watch tower	1x1 1L CFL twist	7	26 Watt CFL Bulb with E26 Base	4200	0.026	7	RELAMP with a 9watt LED A19 Lamp	SYLVANIA - A19	4200	0.009	0.182	0.063	0.119	764	265	500
Housing Unit J	68	#A206	2LT8 4'idustrial	5	1x4 2-Lamp F32Watt T8, Industrial Hood Fixture	4200	0.058	5	REPLACE with new 39watt LED Surface Wrap Fixtures	PHILIPS 1SDL	4200	0.039	0.290	0.195	0.095	1,218	819	399
Housing Unit J	68	Exterior	250wMH shoebox wall pack trunnion mount	16	250watt HID Adjustable Flood Area Fixture	4380	0.300	16	REPLACE with a 86watt LED Adjustable Flood mounted at existing location	CREE - OSQ/AA	3942	0.086	4.800	1.376	3.424	21,024	5,424	15,600
Housing Unit J	68		100w door sconce	1	100Watt Inc/Hal Wall Sconce Fixture	4200	0.100	1	RETROFIT with a 15watt, 2130Lumen LED Wall Sconce Retrofit Kit.	REMPHOS - LEDSR-G2	4200	0.015	0.100	0.015	0.085	420	63	357
Housing Unit S	70	vestibule	4LT8 2x4 prismatic troffer drop ceiling	2	2x4 4-Lamp F32Watt T8, SECURITY	4200	0.116	2	RETROFIT with a 2x4 40watt, 4800Lumen LED Troffer Retrofit Kit.	SYLVANIA - LEDVANCE/LEDR	4200	0.048	0.232	0.096	0.136	974	403	571

Building	Bldg ID	Location Detail	Notes	Pre Retrofit Fixture Qty	Pre-retrofit Description	Pre-Hours	Pre-Retrofit kW/Fixture	Post Retrofit Fixture Qty	Post Retrofit Description	Model Number	Post-Hours	Post Retrofit kW/Fixture	Existing kW	Proposed kW	kW Saved	Existing kWh	Proposed kWh	kWh Saved
Housing Unit S	70	#A101	3LT8 2x4 parabolic troffer drop ceiling	2	2x4 3-Lamp F32Watt T8, SECURITY Fixture	4200	0.084	2	RETROFIT with a 2x4 27watt, 3200Lumen LED Troffer Retrofit Kit.	SYLVANIA - LEDVANCE/LEDR	4200	0.027	0.168	0.054	0.114	706	227	479
Housing Unit S	70	#A200	3LT8 2x4 parabolic troffer drop ceiling	2	2x4 3-Lamp F32Watt T8, SECURITY Fixture	4200	0.084	2	RETROFIT with a 2x4 27watt, 3200Lumen LED Troffer Retrofit Kit.	SYLVANIA - LEDVANCE/LEDR	4200	0.027	0.168	0.054	0.114	706	227	479
Housing Unit S	70	Common area	4LT8 2x4 prismatic troffer drop ceiling	7	2x4 4-Lamp F32Watt T8, SECURITY	4200	0.116	7	RETROFIT with a 2x4 40watt, 4800Lumen LED Troffer Retrofit Kit.	SYLVANIA - LEDVANCE/LEDR	4200	0.048	0.812	0.336	0.476	3,410	1,411	1,999
Housing Unit S	70		2LT8 4' metal tamper proof wrap	18	1x4 2-Lamp F32Watt T8, Surface Wraparound Fixture, SECURITY	4200	0.058	18	RETROFIT with a 24watt LED Strip Kit and electronic driver	LED LIVING - G2/CLARIS	4200	0.024	1.044	0.432	0.612	4,385	1,814	2,570
Housing Unit S	70		100w MH 2x2 drop ceiling	14	2x2 100watt HID Recessed Highbay	4200	0.120	14	RETROFIT with a 2x2 26watt, 3200Lumen LED Troffer Retrofit Kit.	SYLVANIA - LEDVANCE/LEDR	4200	0.026	1.680	0.364	1.316	7,056	1,529	5,527
Housing Unit S	70	--->restroom stalls	100w MH 1x1 square surface mount	16	100watt HID Surface Mount Canopy Fixture - SECURITY FIXTURE	4380	0.120	16	REPLACE with new 20 watt LED SECURITY Surface mount Canopy Fixtures at existing location	FAILSAFE - G12	4380	0.020	1.920	0.320	1.600	8,410	1,402	7,008
Housing Unit S	70	Cells	2LT8 4' metal tamper proof vapor	64	1x4 2-Lamp F32Watt T8, Vaportight Fixture, SECURITY	4200	0.058	64	RETROFIT with a 24watt LED Strip Kit and electronic driver	LED LIVING - G2/CLARIS	4200	0.024	3.712	1.536	2.176	15,590	6,451	9,139
Housing Unit S	70	#A109	4LT8 2x4 prismatic troffer drop ceiling	2	2x4 4-Lamp F32Watt T8, SECURITY	4200	0.116	2	RETROFIT with a 2x4 40watt, 4800Lumen LED Troffer Retrofit Kit.	SYLVANIA - LEDVANCE/LEDR	4200	0.048	0.232	0.096	0.136	974	403	571
Housing Unit S	70	#A110	4LT8 2x4 prismatic troffer drop ceiling	3	2x4 4-Lamp F32Watt T8, SECURITY	4200	0.116	3	RETROFIT with a 2x4 40watt, 4800Lumen LED Troffer Retrofit Kit.	SYLVANIA - LEDVANCE/LEDR	4200	0.048	0.348	0.144	0.204	1,462	605	857
Housing Unit S	70	#A108	2LT8 4' vanity wrap	1	1x4 2-Lamp F32Watt T8, Vaportight Fixture, SECURITY	4200	0.058	1	RETROFIT with a 24watt LED Strip Kit and electronic driver	LED LIVING - G2/CLARIS	4200	0.024	0.058	0.024	0.034	244	101	143
Housing Unit S	70	Watch tower	1x1 1L CFL twist	7	26 Watt CFL Bulb with E26 Base	4200	0.026	7	RELAMP with a 9watt LED A19 Lamp	SYLVANIA - A19	4200	0.009	0.182	0.063	0.119	764	265	500
Housing Unit S	70	#A206	2LT8 4'idustrial	5	1x4 2-Lamp F32Watt T8, Industrial Hood Fixture	4200	0.058	5	REPLACE with new 39watt LED Surface Wrap Fixtures	PHILIPS 1SDL	4200	0.039	0.290	0.195	0.095	1,218	819	399
Housing Unit S	70	Exterior	400w shoebox wall pack	28	400watt HID Adjustable Flood Fixture	4380	0.455	28	REPLACE with a 130watt LED Flood mounted at existing location	CREE - OSQ/AA	3942	0.130	12.740	3.640	9.100	55,801	14,349	41,452
Housing Unit S	70		100w door sconce	1	100Watt Inc/Hal Wall Sconce Fixture	4200	0.100	1	RETROFIT with a 15watt, 2130Lumen LED Wall Sconce Retrofit Kit.	REMPHOS - LEDSR-G2	4200	0.015	0.100	0.015	0.085	420	63	357
Building #73 - DGS Field Office	73	Building #73 - DGS Field Office	exterior narrow sconce 75w incandescent	2	75watt HID Flushmount Wallpack Fixture	4380	0.075	2	REPLACE with new 12 watt LED SECURITY Wallpack Fixtures at existing location	FAILSAFE - B95	4380	0.012	0.150	0.024	0.126	657	105	552
Building #74 - Mailroom	74	Building #74 - Mailroom	2LT8 4' prismatic wrap ceiling surface mount	10	1x4 2-Lamp F32Watt T8, Surface Wraparound Fixture	4200	0.058	10	REPLACE with new 39watt LED Surface Wrap Fixtures	PHILIPS 1SDL	4200	0.039	0.580	0.390	0.190	2,436	1,638	798

Building	Bldg ID	Location Detail	Notes	Pre Retrofit Fixture Qty	Pre-retrofit Description	Pre-Hours	Pre-Retrofit kW/Fixture	Post Retrofit Fixture Qty	Post Retrofit Description	Model Number	Post-Hours	Post Retrofit kW/Fixture	Existing kW	Proposed kW	kW Saved	Existing kWh	Proposed kWh	kWh Saved
Building #74 - Mailroom	74	restroom	75w incandescent	1	75 watt Incandescent Screwin A19 Lamp	4200	0.075	1	RELAMP with a 12 watt LED A19 Lamp	SYLVANIA - A19	4200	0.012	0.075	0.012	0.063	315	50	265
Warehouse	75	Open area	2LT8 4' wrap wall mount	1	1x4 2-Lamp F32Watt T8, Surface Wraparound Fixture	4200	0.058	1	REPLACE with new 39watt LED Surface Wrap Fixtures	PHILIPS 1SDL	4200	0.039	0.058	0.039	0.019	244	164	80
Warehouse	75		6LT8 2x4 troffer wireguard w/motion sensor	69	2x4 6Lamp T8HO Lowbay/Highbay, Warehouse	4200	0.191	69	REPLACE with a 75watt LED Round Highbay on existing pendant	GLOBALTECH - HBATLAS	4200	0.075	13.179	5.175	8.004	55,352	21,735	33,617
Warehouse	75	generator room	2LT8 4' silver industrial	12	1x4 2-Lamp F32Watt T8, Industrial Hood Fixture	2000	0.058	12	REPLACE with new 39watt LED Surface Wrap Fixtures	PHILIPS 1SDL	2000	0.039	0.696	0.468	0.228	1,392	936	456
Warehouse	75	switch room	2LT8 4' silver industrial	10	1x4 2-Lamp F32Watt T8, Industrial Hood Fixture	2000	0.058	10	REPLACE with new 39watt LED Surface Wrap Fixtures	PHILIPS 1SDL	2000	0.039	0.580	0.390	0.190	1,160	780	380
Warehouse	75	offices	3LT8 2x4 parabolic troffer	6	2x4 3-Lamp F32Watt T8, Recessed Troffer	4200	0.084	6	REPLACE with a new 32watt 2x4 LED Volumetric Dimming Kit	MOBERN - RKDISE	2730	0.032	0.504	0.192	0.312	2,117	524	1,593
Warehouse	75	janitor closet	2LT8 4' wrap	1	1x4 2-Lamp F32Watt T8, Surface Wraparound Fixture	2000	0.058	1	REPLACE with new 39watt LED Surface Wrap Fixtures	PHILIPS 1SDL	2000	0.039	0.058	0.039	0.019	116	78	38
Warehouse	75	mech room	2LT8 4' industrial	2	1x4 2-Lamp F32Watt T8, Industrial Hood Fixture	2000	0.058	2	REPLACE with new 39watt LED Surface Wrap Fixtures	PHILIPS 1SDL	2000	0.039	0.116	0.078	0.038	232	156	76
Warehouse	75	restroom	2LT8 4' metal wrap wall mount	2	1x4 2-Lamp F32Watt T8, Surface Wraparound Fixture	4200	0.058	2	REPLACE with new 39watt LED Surface Wrap Fixtures	PHILIPS 1SDL	4200	0.039	0.116	0.078	0.038	487	328	160
Warehouse	75	security room	2LT8 4' silver industrial	9	1x4 2-Lamp F32Watt T8, Industrial Hood Fixture	4200	0.058	9	REPLACE with new 39watt LED Surface Wrap Fixtures	PHILIPS 1SDL	4200	0.039	0.522	0.351	0.171	2,192	1,474	718
Warehouse	75	freezer rooms	4LT5 4' vapor	20	2x4 4Lamp T5HO Lowbay/Highbay, Freezer	2000	0.226	20	REPLACE with a 85watt LED Round Highbay on existing pendant	FAILSAFE - FHL	2000	0.085	4.520	1.700	2.820	9,040	3,400	5,640
Warehouse	75	Exterior	400w shoebox wallpack	19	400watt HID Adjustable Flood Fixture	4380	0.455	19	REPLACE with a 130watt LED Flood mounted at existing location	CREE - OSQ/AA	3942	0.130	8.645	2.470	6.175	37,865	9,737	28,128
Warehouse	75		door wallpack 2L CFL full cut off	12	52watt CFL Entryway Wallpack Fixture	4380	0.075	12	REPLACE with new 12 watt LED SECURITY Wallpack Fixtures at existing location	FAILSAFE - B95	4380	0.012	0.900	0.144	0.756	3,942	631	3,311
Warehouse	75		2LT8 4' vapor	2	1x4 2-Lamp F32Watt T8, Vaportight Fixture	4200	0.058	2	REPLACE with new 39watt LED Surface Wrap Fixtures	PHILIPS 1SDL	4200	0.039	0.116	0.078	0.038	487	328	160
Warehouse	75		emergency flood	3	2-Headed 75 Watt Perimeter Wall Flood	8760	0.150	3	RELAMP with (2) 19 watt LED PAR Lamps	SYLVANIA - PAR	8760	0.038	0.450	0.114	0.336	3,942	999	2,943
Vehicle Garage	76	interior open area	6LT8 2x4 troffer wireguard w/motion sensor	24	2x4 6Lamp T8HO Lowbay/Highbay, Warehouse	4200	0.191	24	REPLACE with a 75watt LED Round Highbay on existing pendant	GLOBALTECH - HBATLAS	4200	0.075	4.584	1.800	2.784	19,253	7,560	11,693

Building	Bldg ID	Location Detail	Notes	Pre Retrofit Fixture Qty	Pre-retrofit Description	Pre-Hours	Pre-Retrofit kW/Fixture	Post Retrofit Fixture Qty	Post Retrofit Description	Model Number	Post-Hours	Post Retrofit kW/Fixture	Existing kW	Proposed kW	kW Saved	Existing kWh	Proposed kWh	kWh Saved
Vehicle Garage	76		2LT8 4' metal wrap	1	1x4 2-Lamp F32Watt T8, Surface Wraparound Fixture	4200	0.058	1	REPLACE with new 39watt LED Surface Wrap Fixtures	PHILIPS 1SDL	4200	0.039	0.058	0.039	0.019	244	164	80
Vehicle Garage	76	office	3LT8 2x4 parabolic troffer drop ceiling	3	2x4 3-Lamp F32Watt T8, Recessed Troffer	4200	0.084	3	REPLACE with a new 32watt 2x4 LED Volumetric Dimming Kit	MOBERN - RKDISE	2730	0.032	0.252	0.096	0.156	1,058	262	796
Vehicle Garage	76	janitor closet	2LT8 4' wrap	1	1x4 2-Lamp F32Watt T8, Surface Wraparound Fixture	2000	0.058	1	REPLACE with new 39watt LED Surface Wrap Fixtures	PHILIPS 1SDL	2000	0.039	0.058	0.039	0.019	116	78	38
Vehicle Garage	76	restroom	2LT8 4' wrap	2	1x4 2-Lamp F32Watt T8, Surface Wraparound Fixture	4200	0.058	2	REPLACE with new 39watt LED Surface Wrap Fixtures	PHILIPS 1SDL	4200	0.039	0.116	0.078	0.038	487	328	160
Armory	Arm		2LT8 4' metal wrap	2	1x4 2-Lamp F32Watt T8, Surface Wraparound Fixture	4200	0.058	2	REPLACE with new 39watt LED Surface Wrap Fixtures	PHILIPS 1SDL	4200	0.039	0.116	0.078	0.038	487	328	160
Armory	Arm		cfl twist in cylinder	2	22 Watt CFL Bulb with E26 Base	4200	0.022	2	RELAMP with a 9watt LED A19 Lamp	SYLVANIA - A19	4200	0.009	0.044	0.018	0.026	185	76	109
Entrance	Ent	Entrance	25' pole w/ square direct arm grey 400w MH	3	25'-35' Pole with 400watt Metal Halide Polehead Fixture, Arm Mount	4380	0.455	3	REPLACE with a 130watt LED Arm fixture mounted at existing location	CREE - OSQ/AA	4380	0.130	1.365	0.390	0.975	5,979	1,708	4,271
Entrance	Ent		20' tapered pole 400w shoebox wallpack trunnion mount	2	25'-35' Pole with 400watt Metal Halide Polehead Fixture, Trunnion Mount	4380	0.455	2	REPLACE with a 130watt LED Adjustable Trunnion Flood mounted at existing location	CREE - OSQ/AA	4380	0.130	0.910	0.260	0.650	3,986	1,139	2,847
Entrance	Ent		LED ground sign light	2	Already Efficient	4200	0.000	2	No Work	N/A	4200	0.000	0.000	0.000	0.000	0	0	0
Parking Lot	Ext	Parking Lot	25' pole w/ square direct arm grey 400w MH	3	25'-35' Pole with 400watt Metal Halide Polehead Fixture, Arm Mount	4380	0.455	3	REPLACE with a 130watt LED Arm fixture mounted at existing location	CREE - OSQ/AA	4380	0.130	1.365	0.390	0.975	5,979	1,708	4,271
Roadways	Ext		20'-30' Perimeter Fence Lighting	72	25'-35' Pole with 400watt Metal Halide Polehead Fixture, Adjustable Mount	4380	0.455	72	REPLACE with a 130watt LED Adjustable fixture mounted at existing location	CREE - OSQ/AA	4380	0.130	32.760	9.360	23.400	143,489	40,997	102,492
Highmast	Ext		60' Highmast Lighting	48	60' + Pole with Efficient LED Highmast Polehead	4380	0.450	48	No work, Already Efficient	N/A	4380	0.450	21.600	21.600	0.000	94,608	94,608	0
Placeholder	All		non-controlled	683	Non-Counted Areas Guesstimate	4200	0.105	683	REPLACE / RETROFIT with LED Equivalent	TBD	4200	0.038	71.715	25.954	45.761	301,203	109,007	192,196
Placeholder	All		controlled	292	Non-Counted Areas Guesstimate	4200	0.105	292	REPLACE / RETROFIT with LED Equivalent	TBD	2730	0.038	30.660	11.096	19.564	128,772	30,292	98,480

Code	Pre Code Description	Pre Watts/Fixt	Post Code Description	Post Watts/Fixt
100-25	100 Watt Inc. Bulb	100	25 Watt Comp. Fluor.	25
100-50	100 Watt Inc. Bulb	100	50 Halogen, Dimmable	50
100d	100 Watt Drum	100	New 2-13Watt Drum Fixture	26
100h	100 Watt 12" Round HID Downlight	110	RETROFIT existing aperture with a 18.5watt LED Downlight Kit and matching 12" trim ring [GE LUMINATION]	19
100h2	50 Watt Downlight	65	RETROFIT with a 27watt LED Downlight Kit [SYLVANIA RT6]	13
100s	100 Watt Wall Sconce	100	New 2-13Watt Sconce Fixture	26
120v	(4) 60Watt Wall Vanity Fixture	240	Replace with (1) New 1x4 2 Lensed Vanity with (2) 22watt LED T8 Lamps [PHILIPS ENDURA]	44
13-5	13watt Compact Fluorescent Spring-Lamp (Plug-in)	13	Relamp with 5watt LED PL-Lamp [MAXLITE] and bypass existing ballast	5
13-9.5	13watt Compact Fluorescent A-Lamp (Screw-in)	13	(Material Only) Supply a 9.5watt LED LongLife A-Lamp	9.5
150f	150 Watt 12" Round Canopy Downlight	180	RETROFIT with a 55 Watt LED Downlight Kit Module [GLOBAL TECH]	60.0
150n	150 Watt Inc, Industrial	150	New 2-Lamp 25Watt T8 Wrap Fixture with Reflector, NPB	44
1x4	1x4 Recessed Layin Fluorescent Troffer Fixture	60	(Labor Only) Replace with LED Recessed Fixture	30
2120d	(2) 60watt Ceiling Mounted Round Drum Fixture	120	REPLACE with a 22watt LED Surface Flushmount Drum [ETI]	22
223d	New 2-23Watt CFL Drum Fixture	46	No Work	46
23-11.6	23watt Compact Fluorescent Rectangular Wall Sconce	23	Relamp with 11.6watt LED Sconce Retrofit Kit [TERRALUX]	12
23-9.5	23watt Compact Fluorescent A-Lamp (Screw-in)	23	(Material Only) Supply a 9.5watt LED LongLife A-Lamp	9.5
30c	30Watt Circuline	35	10 Watt LED Surface Mount Drum Fixture [SYLVANIA 75251]	10
40-5	40Watt Inc Candelabra Lamp	35	(Material Only) Supply a 5 Watt LED Screw-in Candelabra Lamp	5
50h	50 Watt 6" Round Downlight	50	RETROFIT existing aperture with a 13.5watt LED 6" Downlight Kit [GE LUMINATION]	13
60-9	60 watt Incandescent Screwin A19 Lamp	60	RELAMP with a 9watt LED A19 Lamp	9.0
75-12	75 watt Incandescent Screwin A19 Lamp	75	RELAMP with a 12 watt LED A19 Lamp	12.0
75f	75 Watt Halogen Track Light	75	RELAMP with 19 watt LED PAR Lamps	19.0
75f2	2-Headed 75 Watt Perimeter Wall Flood	150	RELAMP with (2) 19 watt LED PAR Lamps	38.0
90p38	90Watt Inc Par-38 Heatlamp	90	19 Watt LED Screw-in PAR38 Lamp [PHILIPS]	19
90p38e	90Watt Inc Par-38 for exterior use	90	19 Watt LED Screw-in PAR38 Lamp [PHILIPS] for exterior use	19
a	2x4 4-Lamp F40Watt T12, Recessed Prismatic	144	REPLACE with a new 32watt 2x4 LED Volumetric Dimming Kit	32.0
ac	2x4 Recessed Troffer with 4-Lamp 32 Watt T8 with Normal Power Factor Ballast, Correctional Tamper Proof	116	RETROFIT with a 44watt 2x4 LED Linear Troffer Kit [SYLVANIA LEDR/TROFF]	44.0
ac1	1x4 4-Lamp 32 Watt T8 with Normal Power Factor Ballast, Correctional Tamper Proof	116	RETROFIT with a 44watt 2x4 LED Linear Troffer Kit [SYLVANIA LEDR/TROFF]	44.0
ac2	2x4 Recessed Troffer with 4-Lamp 32 Watt T8 with Normal Power Factor Ballast, Operating Room	116	RETROFIT with a 44watt 2x4 LED Linear Troffer Kit [SYLVANIA LEDR/TROFF]	44.0
ag	2x4 Recessed Troffer with 4-Lamp 32 Watt T8 with Normal Power Factor Ballast	116	REPLACE with a new 31watt 2x4 LED Volumetric Dimming Kit [PHILIPS EVOKIT]	31.0
ag1	1x4 4-Lamp 32 Watt T8 with Normal Power Factor Ballast	116	RELAMP with (4) 12watt LED-T8 Type-B Lamps and remove ballast for direct wire controlled lamp. Clean and drywipe existing fixture. [SYLVANIA]	48.0
aio	2x4 4-Lamp F40/34Watt T12, Prismatic Inner/Outer	150	RETROFIT with new 2x4 2Lamp T8 Conversion Kit and High Efficiency Ballast, Convert Dual Switching to Checkerboard Switch Configuration	44
ar-250	(2) 250watt Metal Halide Area Fixtures	590	REPLACE with new 262watt LED Area Fixtures at existing location	262
as	2x4 4-Lamp F40Watt T12, Recessed Prismatic, SECURITY Fixture	224	RETROFIT with a 2x4 40watt, 4800Lumen LED Troffer Retrofit Kit.	48.0
at8	2x4 4-Lamp F32Watt T8, Recessed Troffer	116	REPLACE with a new 32watt 2x4 LED Volumetric Dimming Kit	32.0
at86	2x4 6-Lamp F32Watt T8, Recessed Troffer, 20'	191	REPLACE with a new 62watt 2x4 LED HO Volumetric Dimming Kit	62.0

at8g	2x4 Recessed Troffer with 4-Lamp 32 Watt T8 with Normal Power Factor Ballast	116	REPLACE with a new 31watt 2x4 LED Volumetric Dimming Kit [PHILIPS EVOKIT]	31.0
at8n	2x4 4-Lamp F32Watt T8, Surface Mount	112	Replace with a new (2) 28 Watt T8 Lamp WRAP Fixture and (1) Low Power Electronic Ballast [MOBERN 772]	42
at8r	2x4 4-Lamp F32Watt T8	112	Retrofit to a 2-Lamp 25 Watt T8 with HPB and a REFLECTOR CONVERSION KIT	60
at8r1	2x4 4-Lamp F32Watt T8	112	No Work	112
at8s	2x4 4-Lamp F32Watt T8, SECURITY	116	RETROFIT with a 2x4 40watt, 4800Lumen LED Troffer Retrofit Kit.	48.0
aw	2x4 4-Lamp F40Watt T12, Surface mount Wrap	160	REPLACE with a new 39watt 2x4 LED Surface Mount [PHILIPS DUALED]	39.0
b	2x4 3-Lamp F40Watt T12, Recessed Prismatic	120	REPLACE with a new 31watt 2x4 LED Recessed Volumetric Kit [PHILIPS EVOKIT]	31.0
biax	2x2 2-Lamp F40Watt Biax, Recessed Troffer	80	REPLACE with a new 26.4watt 2x2 LED Layin Troffer Fixture [PHILIPS]	26
bnt8	2x4 3-Lamp F32Watt T8	88	New 1x4 2-Lamp 28Watt T8 Wrap with Reflector, NPB	42
boll	100Watt HID Exterior Pedestal Bollard	120	REPLACE with a 24watt LED Bollard [RAB BLED] with color choice to match existing	24
brd	2x4 3-Lamp F40/34Watt T12, dimming	120	Retrofit to a 2-Lamp 28 Watt T8 with HPB and centering reflector kit, Dimming with new circuit wiring for controls	60
bt8	2x4 3-Lamp F32Watt T8, Recessed Troffer	84	REPLACE with a new 32watt 2x4 LED Volumetric Dimming Kit	32.0
bt8c	2x4 Recessed Troffer with 3-Lamp 32 Watt T8 with Normal Power Factor Ballast, Correctional Tamper Proof	84	RETROFIT with a 44watt 2x4 LED Linear Troffer Kit [SYLVANIA LEDR/TROFF]	44.0
bt8g	2x4 Recessed Troffer with 3-Lamp 32 Watt T8 with Normal Power Factor Ballast	84	REPLACE with a new 31watt 2x4 LED Volumetric Dimming Kit [PHILIPS EVOKIT]	31.0
bt81	2x4 3-Lamp F32Watt T8	88	No Work	88
bt8io	2x4 3-Lamp F32Watt T8 - Inner/Outer Switching	84	New 2Lamp 28watt T5 INDIRECT Recessed Fixture - Checkerboard Switching	58
bt8n	1x4 Industrial Hood with 2-Lamp 25 Watt T8 with Normal Power Factor Ballast	42	RELAMP with (2) 12watt LED-T8 Type-B Lamps and remove ballast for direct wire controlled lamp. Clean and drywipe existing fixture. [SYLVANIA]	24.0
bt8r	2x4 3-Lamp F32Watt T8	88	Convert to a 2-Lamp 28Watt T8 with High Power Ballast and REFLECTOR CENTERING KIT	65
bt8r1	2x4 3-Lamp F32Watt T8	88	No Work	88
bt8s	2x4 3-Lamp F32Watt T8, SECURITY Fixture	84	RETROFIT with a 2x4 27watt, 3200Lumen LED Troffer Retrofit Kit.	27.0
bv	2x4 3-Lamp F40/34Watt T12, security	120	Retrofit to a 3-Lamp 28 Watt T8 with LPB, security fixture	64
c	2x4 Recessed Troffer with 2-Lamp 25 Watt T8 with Normal Power Factor Ballast	42	REPLACE with a new 31watt 2x4 LED Volumetric Dimming Kit [PHILIPS EVOKIT]	31.0
can-100	100watt HID Surface Mount Canopy Fixture	120	REPLACE with new 31 watt LED Surface mount Canopy Fixtures at existing location	31
can-100a	100watt Metal Halide Pendent / Surface Mount Canopy Fixture	120	REPLACE with new 66watt LED Canopy Vaportight Fixtures at existing location, Add Integrated Motion Sensor and Photocell	66
can-100r	1' x 1' 100watt HID Recessed Canopy Fixture	120	RETROFIT with new 30 watt LED Round Module Kit inside existing fixture aperture	30
can-100r6	100watt HID Recessed Canopy Fixture, 6" round	120	RETROFIT with a 13watt LED Downlight Module Kit [SYLVANIA RT6HO] with 8" adapter when applicable	13.0
can-100s	100watt HID Surface Mount Canopy Fixture - SECURITY FIXTURE	120	REPLACE with new 20 watt LED SECURITY Surface mount Canopy Fixtures at existing location	20
can-175	175watt HID Surface Mount Canopy Fixture	192	REPLACE with new 60 watt LED Surface mount Canopy Fixtures at existing location	60
can-250	250watt HID Surface Mount Canopy Fixture	300	REPLACE with new 85 watt LED Surface mount Canopy Fixtures at existing location	85
cfl-13p	13 Watt CFL-PL 2pin Lamp, Nightlight	13	RELAMP with a 6watt LED PL (Ballast Bypass) Lamp	6.0
cfl-18	18 Watt CFL-PL 2pin Lamp, Cylinder/Drum	18	RELAMP with a 8watt LED PL (Ballast Bypass) Lamp	8.0
cfl-19	19 Watt CFL Bulb in Chandelier with Candelabra Base	19	RELAMP with a 4.5watt LED B10 Lamp	4.5
cfl-22	22 Watt CFL Bulb with E26 Base	22	RELAMP with a 9watt LED A19 Lamp	9.0
cfl-26	26 Watt CFL Bulb with E26 Base	26	RELAMP with a 9watt LED A19 Lamp	9.0
cfl-42d	42 Watt CFL Downlight, 6" round	42	RETROFIT with a 13watt LED Downlight Module Kit [SYLVANIA RT6HO] with 8" adapter when applicable	13.0
cfl-42ds	2-18 Watt CFL Downlight, 6" round , SECURITY	36	RELAMP with (2) 8watt LED PL (Ballast Bypass) Lamp	16.0
cfl-84s	84Watt CFL Wall Sconce Slender Fixture	84	RETROFIT with a 15watt, 2130Lumen LED Wall Sconce Retrofit Kit.	15
chand150	150watt INC Pendent Mount Chandelier Fixture	150	REPLACE with new 60watt LED Architectural up/downlight dimming pendant fixture	60
circ	12" round 76watt CFL Circuline Drum Surface mount Fixture	76	REPLACE with new 15", 30 watt LED SECURITY Surface mount Round Fixtures at existing location	20
circs	12" round 76watt CFL Circuline Drum, SECURITY	76	RETROFIT with a 16watt, 2352Lumen LED Wall Sconce Retrofit Kit.	16

ct8	2x4 2-Lamp F32Watt T8, Recessed Troffer	58	REPLACE with a new 22watt 2x4 LED Volumetric Dimming Kit	22.0
ct8s	2x4 2-Lamp F32Watt T8, SECURITY Fixture	58	RETROFIT with a 2x4 27watt, 3200Lumen LED Troffer Retrofit Kit.	27.0
cyl	8" round 42watt CFL Cylinder Vanity, SECURITY	42	REPLACE with new 15", 30 watt LED SECURITY Surface mount Round Fixtures at existing location	20
d	1x4 2-Lamp F40Watt T12, Exposed Strip	80	RELAMP/REBALLAST with (2) new 14watt LD-T8 Lamps and new electronic driver (PHILIPS INSTANTFIT)	30.0
di	1x4 2-Lamp F40/34Watt T12, Industrial Hood	72	NEW 1x4 INDUSTRIAL HOODED FIXTURE with (2) 15watt LED-T8 Rotatable Lamps and (1) new electronic ballast. [MOBERN / PHILIPS]	30
diw	1x4 2-Lamp F40/34Watt T12, Wood Shielded Strip	72	RELAMP / REBALLAST with (2) 15watt LED-T8 Rotatable Lamps and (1) new electronic ballast. [MOBERN / PHILIPS]	30
dns	1x4 2-Lamp F40/34Watt T12, Suspended Strip	72	REPLACE with a new 28watt LED 1x4 Lensed Suspended Strip [ORION SFHC14D1SDUNVFDSXCT85006W]	28
dns8	1x8 2-Lamp F96Watt T12, Suspended Strip	158	REPLACE with a new 54watt LED 1x8 Lensed Suspended Strip [ORION SFHC18G1SDUNVFDSXCT85006W]	54
dnt8s	1x4 2-Lamp F40/34Watt T12, Surface Mount	72	REPLACE with a 1x4 Strip fixture housing (2) 12.5watt LED-T8 lamps and (1) new electronic ballast. [PHILIPS]	25
dnt8s1	1x4 2-Lamp F32Watt T8, Strip	56	Retrofit with (2) 28 Watt T8 Lamps and (1) Low Power Electronic Ballast	42
dr-175	175watt HID Pendant Mount 2' Round Drum Fixture	192	REPLACE with new 60 watt LED Pendant mount Canopy Fixtures at existing location	60
drum26	2-13Watt CFL Surface Flushmount Drum Fixture	26	REPLACE with a 12watt LED Surface Flushmount Fixture [TERON]	12.0
dt8	1x4 Exposed Strip with 2-Lamp 32 Watt Fluorescent T8 with Normal Power Factor Ballast	58	RELAMP with (2) 10watt LED-T8 Type-A Lamps and new Electronic Driver. Clean and drywipe existing fixture.	24.0
dt8c	1x4 Exposed Strip with 2-Lamp 32 Watt T8 with Normal Power Factor Ballast, Correctional Tamper Proof	58	RELAMP with (2) 12watt LED-T8 Type-B Lamps and remove ballast for direct wire controlled lamp. Clean and drywipe existing fixture. [SYLVANIA]	24.0
dt8g	1x4 Exposed Strip with 2-Lamp 32 Watt T8 with Normal Power Factor Ballast	58	RELAMP with (2) 12watt LED-T8 Type-B Lamps and remove ballast for direct wire controlled lamp. Clean and drywipe existing fixture. [SYLVANIA]	24.0
dt8i	1x4 2-Lamp F32Watt T8, Industrial Hood Fixture	58	REPLACE with new 39watt LED Surface Wrap Fixtures	39.0
dt8i2	1x4 2-Lamp F40Watt T12, Industrial Hood Fixture	72	REPLACE with new 39watt LED Surface Wrap Fixtures	39.0
dt8i3	1x4 3-Lamp F32Watt T8, Industrial Hood Fixture	84	REPLACE with new 39watt LED Surface Wrap Fixtures	39.0
dt8i32	1x4 3-Lamp F40Watt T12, Industrial Hood Fixture	108	REPLACE with new 39watt LED Surface Wrap Fixtures	39.0
dt8i4	1x4 4-Lamp F32Watt T8, Industrial Hood Fixture	116	REPLACE with new 39watt LED Surface Wrap Fixtures	39.0
dt8i42	1x4 4-Lamp F40Watt T12, Industrial Hood Fixture	144	REPLACE with new 39watt LED Surface Wrap Fixtures	39.0
dt8r	1x4 2-Lamp F32Watt T8 Recessed Troffer	58	REPLACE with a new 22watt 1x4 LED Volumetric Dimming Kit	22.0
dt8s	1x4 2-Lamp F32Watt T8 Recessed Troffer, SECURITY	58	RETROFIT with a 2x4 27watt, 3200Lumen LED Troffer Retrofit Kit.	27.0
dt8se	1x4 2-Lamp F32Watt T8, Surface Wraparound Fixture, Existing Sensor	58	NEW 28watt Surface mount Fixture with dimming ballast and integrated occupancy sensor [LITHONIA]	28
dt8set	1x4 2-Lamp F32Watt T8, Surface Wraparound Fixture	58	NEW 28watt Surface mount Fixture with dimming ballast and integrated occupancy sensor [LITHONIA]	28
dt8st	1x4 Stairwell Fixture with 2-Lamp 25 Watt T8 with Normal Power Factor Ballast	42	REPLACE with a new 24watt LED wall mount Egress Fixtures with integrated dimming drivers and motion sensors programmed to dim to 20% when unoccupied. [LAMAR]	24.0
dt8v	1x4 2-Lamp F32Watt T8, Vanity Fixture	58	RETROFIT with a 24watt LED Strip Kit and electronic driver	24.0
dt8vp	1x4 2-Lamp F32Watt T8, Vaportight Fixture	58	REPLACE with new 39watt LED Surface Wrap Fixtures	39.0
dt8vs	1x4 2-Lamp F32Watt T8, Vaportight Fixture, SECURITY	58	RETROFIT with a 24watt LED Strip Kit and electronic driver	24.0
dt8w	1x4 2-Lamp F32Watt T8, Surface Wraparound Fixture	58	REPLACE with new 39watt LED Surface Wrap Fixtures	39.0
dt8w2	1x2 2-Lamp F17Watt T8, Surface Wraparound Fixture	34	RETROFIT with a 16watt LED Strip Kit and electronic driver	16.0
dt8w4	1x4 4-Lamp F32Watt T8, Surface Wrap Fixture	116	REPLACE with new 39watt LED Surface Wrap Fixtures	39.0
dt8w4s	1x4 4-Lamp F32Watt T8, Surface Wrap Fixture, SECURITY	116	RETROFIT with a 32watt LED Strip Kit and electronic driver	32.0
dt8ws	1x4 2-Lamp F32Watt T8, Surface Wraparound Fixture, SECURITY	58	RETROFIT with a 24watt LED Strip Kit and electronic driver	24.0
dt8i4	1x4 4-Lamp F32Watt T8, Industrial Hood Fixture	116	REPLACE with new 39watt LED Surface Wrap Fixtures	39.0
dw2	1x4 2-Lamp F40/34Watt T12, Surface Mount Fixture	72	REPLACE with new 39watt LED Surface Wrap Fixtures	39.0
e	1x4 fixture with (1) F40watt T12 and (1) Normal Power Factor Ballast	36	RELAMP / REBALLAST with (1) 14watt LED-T8 Rotatable Lamps and (1) new electronic driver. Clean and drywipe existing fixture	15.0
edt	1x4 1-Lamp F32Watt T8 Decorative Up/Down Pendent, Tandem Wired	58	RELAMP / REBALLAST with (2) 15watt LED-T8 Rotatable Lamps and (1) new electronic ballast. Clean and drywipe existing fixture. [PHILIPS]	30.0
et8	1x4 fixture with (1) F32watt T8 and (1) Normal Power Factor Ballast	29	RELAMP / REBALLAST with (1) 14watt LED-T8 Rotatable Lamps and (1) new electronic driver. Clean and drywipe existing fixture	15.0

et8re	1x4 1-Lamp F32Watt T8	32	Relamp to a 1-Lamp 28 Watt T8	24
et8v	1x4 1-Lamp F32Watt T8, Vaportight	56	RELAMP with (1) 15watt LED-T8 integrated lamps and rewire for ballast removal. Clean and drywipe existing fixture. [KEYSTONE]	15
fan	60watt LED Incandescent Screw-in Lamp within Fan Unit	60	No Work	60
fk	1x8 2Lamp T12 Shatterproof, Strip Fluorescent Fixture	158	RELAMP / REBALLAST to a 4-Lamp 12.5 Watt 4' T8 with (1) Normal Power Electronic Ballast and Conversion Kit	50
fn	1x8 2-Lamp F60Watt T12, Exposed Industrial Stirp	138	REPLACE with a new 54watt 2x4 LED Surface Mount [PHILIPS DUALED]	54.0
fn4	1x8 4-Lamp F96Watt T8, Industrial Hood	236	NEW 1x4 LED HIGHBAY FIXTURE mounted at premium location to maximize light spread - NEW DESIGN [GE ALBEO]	95
fn4t12	1x8 4-Lamp F96Watt T12, Industrial Hood	300	NEW 1x8 LED HIGHBAY FIXTURE mounted at premium location to maximize light spread - NEW DESIGN [GE ALBEO]	190
fnho	1x8 2-Lamp F96Watt T12, Industrial Highbay	138	New 1x8 Industrial Hood Fixture with (4) 15Watt LED-T8 Lamps and new electronic ballast [PHILIPS]	60
fnt8	1x8 2-Lamp F59Watt T8, Exposed Industrial Stirp	109	REPLACE with a new 54watt 2x4 LED Surface Mount [PHILIPS DUALED]	54.0
gk	1x8 1-Lamp F96Watt T12	88	Retrofit to a 2-Lamp 28 Watt T8 with NPB and centering reflector kit	48
hb400	400watt HID Dome Pendant Mounted Highbay	460	REPLACE with a new 88watt LED 1x4 Vaportight [ORION VTON14D1UNVXXSTFR85011WSS]	88
hid-100p	150watt Inc Pendant Highbay	150	REPLACE with new 60 watt LED Canopy Fixtures, Surface mount to ceiling	60
hid-100r	2x2 100watt HID Recessed Highbay	120	RETROFIT with a 2x2 26watt, 3200Lumen LED Troffer Retrofit Kit.	26.0
hid-250	250watt HID Pendant Mounted Lowbay/Highbay	300	REPLACE with a 85watt LED Round Highbay on existing pendant	85.0
hid-252	252watt CFL Pendant Mounted Lowbay/Highbay	252	REPLACE with a 85watt LED Round Highbay on existing pendant	85.0
hid-4t5	2x4 4Lamp T5HO Lowbay/Highbay, Freezer	226	REPLACE with a 85watt LED Round Highbay on existing pendant	85.0
hid-6t8	2x4 6Lamp T8HO Lowbay/Highbay, Warehouse	191	REPLACE with a 75watt LED Round Highbay on existing pendant	75.0
i100s	100Watt Inc/Hal Wall Sconce Fixture	100	RETROFIT with a 15watt, 2130Lumen LED Wall Sconce Retrofit Kit.	15
ia			Included with the above Sensor	
ip			Integrated Fixture Mounted Photocell	
is			Integrated Fixture Mounted Occupancy Sensor	
jt8	1x3 2-Lamp F25Watt T8, Exposed Strip	46	RELAMP/REBALLAST with (2) new 10watt LD-T8 Lamps and new electronic driver (PHILIPS INSTANTFIT)	24.0
jt81	1x3 2-Lamp F25Watt T8	46	No Work	46
kiw	1x3 2-Lamp F30Watt T12, Wood Shielded Strip	46	RELAMP / REBALLAST with (2) 10.5watt LED-3'-T8 Rotatable Lamps and (1) new electronic ballast. [MOBERN / PHILIPS]	21
l	1x2 Strip with 2-Lamp 20 Watt T12 with Normal Power Factor Ballast	38	RELAMP with (2) 9watt LED-T8 Type-B Lamps and remove ballast for direct wire controlled lamp. Clean and drywipe existing fixture. [SYLVANIA]	18.0
la	No Work	20	No Work	20
lc	1x2 Strip with 2-Lamp 20 Watt T12 with Normal Power Factor Ballast, Correctional Tamper Proof	38	RELAMP with (2) 9watt LED-T8 Type-B Lamps and remove ballast for direct wire controlled lamp. Clean and drywipe existing fixture. [SYLVANIA]	18.0
lt8	1x2 Exposed Strip with 2-Lamp 17 Watt T8 with Normal Power Factor Ballast	32	RELAMP with (2) 9watt LED-T8 Type-B Lamps and remove ballast for direct wire controlled lamp. Clean and drywipe existing fixture. [SYLVANIA]	18.0
lt81	1x2 Exposed Strip with 2-Lamp 17 Watt T8 with Normal Power Factor Ballast	32	RELAMP with (2) 9watt LED-T8 Type-B Lamps and remove ballast for direct wire controlled lamp. Clean and drywipe existing fixture. [SYLVANIA]	18.0
lt8c1	1x2 Exposed Strip with 2-Lamp 17 Watt T8 with Normal Power Factor Ballast, Correctional Tamper Proof	32	RELAMP with (2) 9watt LED-T8 Type-B Lamps and remove ballast for direct wire controlled lamp. Clean and drywipe existing fixture. [SYLVANIA]	18.0
mt81	1x2 Exposed Strip with 1-Lamp 17 Watt T8 with Normal Power Factor Ballast	16	RELAMP with (1) 9watt LED-T8 Type-B Lamps and remove ballast for direct wire controlled lamp. Clean and drywipe existing fixture. [SYLVANIA]	9.0
mt8c1	1x2 Exposed Strip with 1-Lamp 17 Watt T8 with Normal Power Factor Ballast, Correctional Tamper Proof	16	RELAMP with (1) 9watt LED-T8 Type-B Lamps and remove ballast for direct wire controlled lamp. Clean and drywipe existing fixture. [SYLVANIA]	9.0
mr-led	7watt LED MR-16	7	No Work	7
nr		0	NO CHANGE	
nt12	4x4 8-Lamp F40Watt T12 Recessed Square	288	RELAMP / REBALLAST with (8) 15watt LED-T8 Rotatable Lamps and (2) new electronic ballast. [MOBERN / PHILIPS]	120
nv	1x2 2-Lamp F30Watt T12	50	New 1-Lamp 2'-17 Watt T8 with NPB / Reflector	17
nw	Already Efficient	0	No Work	0
oc	Toggle Switch		Install Ceiling-Mounted Occupancy Sensor (SENSOR SWITCH)	

ocd	Toggle Switch		New Ceiling Mounted Occupancy and Daylight (Where Applicable) Sensors w/ accompanying on/off dimming switch	
of	Toggle Switch		Fixture Integrated On/Off Occupancy Sensor	
ofd	Toggle Switch		Fixture Integrated On/Off Daylight Sensor	
ow	Toggle Switch		Install Wall Switch-Mounted Occupancy Sensor (SENSOR SWITCH)	
ow1	Toggle Switch		Install Wall Switch-Mounted Occupancy Sensor	
pc	Breaker Controls		Fixture Mounted Photocell	
ph	Non-Counted Areas Guesstimate	105	REPLACE / RETROFIT with LED Equivalent	38.0
pole-1000l	60' + Pole with Efficient LED Highmast Polehead	450	No work, Already Efficient	450
pole-175p	15'-20' Pole with 150watt HID Top Mount Posttop	180	REPLACE worth a new 48watt LED Posttop Fixture [DELVIRO Lumenova]	48.0
pole-250	20'-30' Pole with 250watt Metal Halide Shoebox Arm mount Polehead Fixture	292	REPLACE with new 78watt LED Arm mount Pole Fixtures at existing location with integrated photocell	78.0
pole-250d	15'-20' Pole with 250watt HID Top Mount Décor	292	REPLACE worth a new 65watt LED Posttop Fixture [DELVIRO Lumenova]	65.0
pole-250g	15'-20' Pole with 250watt HID Top Mount Globe	292	RETROFIT existing fixture with new 55watt LED Module with External Driver	55.0
pole-342	20' Décor Pole with (3) 42watt CFL Lamps	126	REPLACE worth a new 48watt LED Posttop Fixture [DELVIRO Lumenova]	48.0
pole-400	25'-35' Pole with 400watt Metal Halide Polehead Fixture, Arm Mount	455	REPLACE with a 130watt LED Arm fixture mounted at existing location	130
pole-400a	25'-35' Pole with 400watt Metal Halide Polehead Fixture, Adjustable Mount	455	REPLACE with a 130watt LED Adjustable fixture mounted at existing location	130
pole-400t	25'-35' Pole with 400watt Metal Halide Polehead Fixture, Trunnion Mount	455	REPLACE with a 130watt LED Adjustable Trunnion Flood mounted at existing location	130
rew	No Power - Bollards	0	troubleshoot and Current Electrical Deficiency	0
staird	1x4 2-Lamp F40/34Watt T12	79	New Stairwell (Dimming with Occupancy Sensor) 1x4 2 Lamp T8 Fixture	55
tbd	Existing Inefficient Fixture	150	REPLACE with a new LED applicable fixture TBD Size, Shape, Type (Placeholder)	50
ten2	1000watt MH Indirect Fixture, 35'	1,150	New Indirect T5 Tennis "Courtlite" 12Lamp Fixture	702
u	2x2 Recessed Troffer with 2-Lamp 17 Watt T8 with Low Power Factor Ballast and a REFLECTOR CONVERSION KIT	31	REPLACE with a new 17watt 2x2 LED Volumetric Dimming Kit [PHILIPS EVOKIT]	16.8
u3	2x2 3-Lamp F40Watt T12	122	Retrofit to a 2-Lamp 17 Watt T8 with HPB and centering reflector kit	39
u4	2x2 Recessed Troffer with 2-Lamp 17 Watt T8 with Low Power Factor Ballast and a REFLECTOR CONVERSION KIT	31	REPLACE with a new 17watt 2x2 LED Volumetric Dimming Kit [PHILIPS EVOKIT]	16.8
u41	2x2 4-Lamp F20Watt T12	78	Replace with a 2x2 2-Lamp 17Watt T8 Fixture with Normal Power Ballast	31
u4t8	2x2 Recessed Troffer with 2-Lamp 17 Watt T8 with Low Power Factor Ballast and a REFLECTOR CONVERSION KIT	31	REPLACE with a new 17watt 2x2 LED Volumetric Dimming Kit [PHILIPS EVOKIT]	16.8
ub	2x2 2-Lamp F40Watt Biax	85	Retrofit to a 3-Lamp 17 Watt T8 with LPB and centering reflector kit	40
uc1	2x2 Recessed Troffer with 2-Lamp 31 Watt U-T8 with Normal Power Factor Ballast, Operating Room	56	RETROFIT with a 27watt 2x2 LED Linear Troffer Kit [SYLVANIA LEDR/TROFF]	27.0
ug	2x2 Recessed Troffer with 2-Lamp 31 Watt U-T8 Lamps and Normal Power Factor Ballast	56	REPLACE with a new 24watt 2x2 LED Volumetric Dimming Kit [PHILIPS EVOKIT]	24.0
uh	2x2 2-ULamp F40Watt T12	75	Retrofit to a 3-Lamp 17 Watt T8 with LPB and centering reflector kit	40
un	2x2 2-ULamp F40Watt T12	94	REDESIGN with new 2x4 2Lamp T8 Fixtures and High Efficiency Ballast to match existing 2x4s [LITHONIA]	44
ut8	2x2 2U-Lamp F31Watt T8, Recessed Troffer	56	REPLACE with a new 24watt 2x2 LED Volumetric Dimming Kit	24.0
ut8c	2x2 Recessed Troffer with 2-Lamp 31 Watt U-T8 Lamps and Normal Power Factor Ballast, Correctional Tamper Proof	56	RETROFIT with a 27watt 2x2 LED Linear Troffer Kit [SYLVANIA LEDR/TROFF]	27.0
ut8g	2x2 Recessed Troffer with 2-Lamp 31 Watt U-T8 Lamps and Normal Power Factor Ballast	56	REPLACE with a new 17watt 2x2 LED Volumetric Dimming Kit [PHILIPS EVOKIT]	16.8
ut83	2x2 Recessed Troffer with 2-Lamp 17 Watt T8 with Low Power Factor Ballast and a REFLECTOR CONVERSION KIT	31	REPLACE with a new 17watt 2x2 LED Volumetric Dimming Kit [PHILIPS EVOKIT]	16.8
ut8s	2x2 2U-Lamp F31Watt T8, Recessed Troffer	56	RETROFIT with a 2x2 26watt, 3200Lumen LED Troffer Retrofit Kit.	26.0
vc	Cold Vending Machine	300	Cool Vending Controls	300
vs	Snack Vending Machine	200	Snack Vending Controls	200
wp-100	100watt HID Flushmount Wallpack Fixture	120	REPLACE with new 30 watt LED SECURITY Wallpack Fixtures at existing location	30
wp-175l	175watt Metal Halide Wallpack Fixture, Low Profile	210	REPLACE with new 40watt LED Low Profile Flushmount Wallpack Fixtures with integrated photocell	40.0

wp-250	250watt HID Flushmount Wallpack Fixture	295	REPLACE with new 85 watt LED Flushmount Wallpack Fixtures at existing location	85.0
wp-250f	250watt HID Adjustable Flood Area Fixture	300	REPLACE with a 86watt LED Adjustable Flood mounted at existing location	86
wp-400	400watt HID Flushmount Wallpack Fixture	455	REPLACE with new 119 watt LED Flushmount Wallpack Fixtures at existing location	19.0
wp-400f	400watt HID Adjustable Flood Fixture	455	REPLACE with a 130watt LED Flood mounted at existing location	130
wp-52	52watt CFL Entryway Wallpack Fixture	75	REPLACE with new 12 watt LED SECURITY Wallpack Fixtures at existing location	12
wp-75	75watt HID Flushmount Wallpack Fixture	75	REPLACE with new 12 watt LED SECURITY Wallpack Fixtures at existing location	12
wp-LED	Existing LED Wallpack	58	No Work	58
xb	LED Exit Sign	2	No Work	2.0
xbext	Mixed Wattage Inc/Fluor Exit Sign, Exterior Weather Proof	25	REPLACE with new White Polycarbonate LED Exit Sign with Red Letters, Battery Backup and Weatherproof Cover	2.0
xl	LED Exit Sign	2	No Work	2.0

PVWatts® Calculator

NREL
NATIONAL RENEWABLE ENERGY LABORATORY

Month	Solar Radiation (kWh / m^2 / day)	AC Energy (kWh)
January	2.63	41,762
February	3.41	46,860
March	4.48	64,870
April	5.26	71,961
May	5.80	79,658
June	6.02	77,316
July	6.33	82,336
August	5.46	71,835
September	4.76	61,688
October	3.68	51,863
November	2.82	40,677
December	2.16	33,562

Annual	**4.40**	**625,000**

Location and Station Identification

Requested Location	muncy, pa
Weather Data Source	Lat, Lon: 41.21, -76.78 0.6 mi
Latitude	41.21° N
Longitude	76.78° W

PV System Specifications *(Commercial)*

AC System Size	500 kW
Module Type	Standard
Array Type	Fixed (open rack)
Array Tilt	20°
Array Azimuth	180°
System Losses	14.08%
Inverter Efficiency	96%
DC to AC Size Ratio	1.2

Project: SCI Muncy
CM: Steam Trap Retrofit
Survey Type Preliminary

Modified Napier Formula

q = 24.24 * D^2 * (P+14.7) * Orifice Factor * App Factor * Loss Factor

q =Heat Loss (lb/hr)
D = Orifice Diameter (inches)
P = Gauge Pressure (psig)
Orifice Factor = 0.66
Loss Factor = (See table below)

Condition	Code	Loss Factor
Abandoned	**A**	**0**
Vacuum breaker/Vent	**VB**	**0**
Not Tested	**NT**	**0.08**
Plugged (Failed Closed)	**P**	**0**
Blowing (Failed Open)	**B**	**1**
Leaking	**L**	**0.3**
Working Properly	**OK**	**0**

Bin Temp	Temp Rang	occupied hr	% trap hrs	Occ trap hrs
52.5	50 to 55	612	0%	-
47.5	45 to 50	477	12%	57
42.5	40 to 45	657	20%	131
37.5	35 to 40	855	28%	239
32.5	30 to 35	753	36%	271
27.5	25 to 30	484	44%	213
22.5	20 to 25	368	52%	191
17.5	15 to 20	234	60%	140
12.5	10 to 15	87	68%	59
7.5	5 to 10	60	76%	46
2.5	0 to 5	18	84%	15
-2.5	11 to 15	26	92%	24
-7.5	6 to 10	2	100%	2
	Occ Totals	4633		1,390

Totals: **1049**

Line Item	Qty.	Building	Building Type	Application	Line Pressure (psig)	Type	Orifice Size	Hours Active	Loss Factor	Boile eff.	(lb/hr)	(Mbtu/hr)	(MMbtu/yr)
1	4	SCI Muncy	Correctional	Cooking	10	IB	0.125	1095	0.08	80%	2	2.27	2
2	1	SCI Muncy	Correctional	Dishwasher	10	TD	0.125	1095	0.08	80%	0	0.57	1
3	1	SCI Muncy	Correctional	Dom HW	10	FT	0.218	2190	0.08	80%	1	1.73	4
4	13	SCI Muncy	Correctional	Dom HW	10	FT	0.218	2190	0.08	80%	18	22.46	49
5	2	SCI Muncy	Correctional	Dom HW	10	FT	0.500	2190	0.08	80%	15	18.18	40
6	2	SCI Muncy	Correctional	Dom HW	10	FT	0.625	2190	0.08	80%	23	28.40	62
7	6	SCI Muncy	Correctional	Drip 8760	40	TD	0.125	8760	0.08	80%	6	7.55	66
8	2	SCI Muncy	Correctional	Drip 8760	40	TS	0.250	8760	0.08	80%	8	10.06	88
9	2	SCI Muncy	Correctional	Drip 8760	40	FT	0.166	8760	0.08	80%	4	4.44	39
10	6	SCI Muncy	Correctional	Drip 8760	40	TD	0.125	8760	0.08	80%	6	7.55	66
11	6	SCI Muncy	Correctional	Drip 8760	40	FT	0.166	8760	0.08	80%	11	13.31	117
12	27	SCI Muncy	Correctional	Drip 8760	40	IB	0.125	8760	0.08	80%	27	33.97	298
13	5	SCI Muncy	Correctional	Drip 8760	40	TD	0.125	8760	0.08	80%	5	6.29	55
14	6	SCI Muncy	Correctional	Drip 8760	10	FT	0.218	8760	0.08	80%	8	10.37	91
15	6	SCI Muncy	Correctional	Drip 8760	10	FT	0.218	8760	0.08	80%	8	10.37	91
16	1	SCI Muncy	Correctional	Drip 8760	10	TD	0.125	8760	0.08	80%	0	0.57	5
17	1	SCI Muncy	Correctional	Drip 8760	10	FT	0.500	8760	0.08	80%	7	9.09	80
18	3	SCI Muncy	Correctional	Drip Heat	10	IB	0.125	4633	0.08	80%	1	1.70	8
19	8	SCI Muncy	Correctional	Drip Heat	10	FT	0.218	4633	0.08	80%	11	13.82	64
20	5	SCI Muncy	Correctional	Drip Heat	10	FT	0.218	4633	0.08	80%	7	8.64	40
21	3	SCI Muncy	Correctional	Drip Heat	10	TD	0.125	4633	0.08	80%	1	1.70	8
22	26	SCI Muncy	Correctional	Drip Heat	10	FT	0.218	4633	0.08	80%	36	44.92	208
23	4	SCI Muncy	Correctional	Drip Heat	10	FT	0.500	4633	0.08	80%	29	36.35	168
24	8	SCI Muncy	Correctional	Heating	10	TD	0.125	1390	0.08	80%	4	4.54	6
25	3	SCI Muncy	Correctional	Heating	10	FT	0.218	1390	0.08	80%	4	5.18	7
26	3	SCI Muncy	Correctional	Heating	10	IB	0.125	1390	0.08	80%	1	1.70	2
27	9	SCI Muncy	Correctional	Heating	10	FT	0.218	1390	0.08	80%	12	15.55	22
28	3	SCI Muncy	Correctional	Heating	10	TS	0.250	1390	0.08	80%	5	6.82	9
29	4	SCI Muncy	Correctional	Heating	10	FT	0.500	1390	0.08	80%	29	36.35	51
30	2	SCI Muncy	Correctional	Heating HX	10	IB	0.250	1390	0.08	80%	4	4.54	6
31	1	SCI Muncy	Correctional	Heating HX	10	FT	0.625	1390	0.08	80%	11	14.20	20
32	2	SCI Muncy	Correctional	House Trap	10	IB	0.250	0	0.08	80%	4	4.54	-
33	3	SCI Muncy	Correctional	Drip 8760	100	TD	0.125	8760	0.08	80%	6	7.91	69
34	3	SCI Muncy	Correctional	Drip 8760	100	FT	0.125	8760	0.08	80%	6	7.91	69
35	3	SCI Muncy	Correctional	Cooking	100	IB	0.125	1095	0.08	80%	6	7.91	9
36	865	SCI Muncy	Correctional	Rads	10	TS	0.250	1390	0.08	80%	1,572	1,965.43	2,731

Replace window AC units with split, variable refrigerant flow AC system in the Administration Building

Administration Building

Assumptions:		**units**
1 Existing Number of Window A/C Units	30	Qty.
2 Average Capacity, per Window A/C Unit	1.25	Tons
3 Existing Window A/C Efficiency	1.40	kW/Ton
4 Cooling Utilization Factor	40%	
5 Operating Hours (Williamsport BIN Data, 6AM to 6PM, 5 Days/Wk)	3,084	Hrs/yr
6 Proposed VRF Cooling Efficiency	1.13	kW/Ton

Calculations:		**units**
1 Total Capacity of Window A/C Units	37.5	Tons
2 Existing Cooling Ton-hrs = Total Capacity x Cooling Utilization Factor x Operating Hours	46,260	Ton-hrs
3 Existing Cooling Electricity Used = Ton-Hrs x Existing Window A/C Efficiency	64,764	kWh/yr
4 Proposed Cooling Electricity Used = Ton-Hrs x Proposed VRF Cooling Efficiency	52,464	kWh/yr
5 Electricity Saved = Proposed Cooling Electricity - Existing Cooling Electricity	**13,094**	**kWh/yr**

Intelli-Hood®
Melink Corporation

ENERGY STAR 2015
Emerging Technology Award

ESTIMATED SAVINGS REPORT

State Correctional Institute - Muncy - Pennsylvania

- ,

Retrofit / Existing Building

3/30/2018

ENERGY SAVINGS SUMMARY

Fan Energy Savings:	46,608	kWh/YEAR
Heating Savings:	4,502	Therm/YEAR

Melink
Energy solutions for a brighter tomorrow™

FAN ENERGY SAVINGS

INPUT DATA:

A	Operating Hours Per Day	24 HRS/DAY
B	Operating Days Per Week	7 DAYS/WK
C	Operating Weeks Per Year	52 WKS/YR
D	Horsepower of Fan Motor(s)	10.5 HP
E	Load Factor of Fan Motor(s)	0.90

CONSTANT EXHAUST VOLUME ANALYSIS:

G	Total Time (A x B x C)	8,736 HRS/YR
H	Total kWh/HP/YR (0.746/System Effic. x G)	7,448 kWh/HP/YR

VARIABLE EXHAUST VOLUME ANALYSIS:

% Rated RPM I	% Run Time J	Time HRS/YR K=GxJ	Output kW/HP L	System Effic. M	Input kW/HP N=L/M	kWh/ HP/YR O=KxN
100%	15%	1310.4	0.746	0.875	0.853	1117.2
90%	10%	873.6	0.544	0.875	0.622	543.0
80%	5%	436.8	0.382	0.875	0.437	190.7
70%	10%	873.6	0.256	0.875	0.292	255.5
60%	15%	1310.4	0.161	0.875	0.184	241.3
50%	5%	436.8	0.093	0.875	0.107	46.6
40%	15%	1310.4	0.048	0.875	0.055	71.5
30%	25%	2184	0.020	0.875	0.023	50.3
20%	0%	0	0.006	0.875	0.007	0.0
10%	0%	0	0.001	0.875	0.001	0.0

P Total kWh/HP/YR (Total of Column O) 2516.0

CALCULATION: (H - P) x D x E x F

SAVINGS = 46,608 kWh/YEAR

HEATING SAVINGS

PROJECT: State Correctional Institute - Muncy - Pennsylvania

INPUT DATA:

A Previous Net Exhaust Volume	7,500 CFM
B New Net Exhaust Volume (1)	4500 CFM
C Winter Building Temperature	68.0 (°F)
D Previous Net Heat Load (2)	1,392,994 kBTU
E New Net Heat Load (2)	835,796 kBTU
F Operating Hours Per Day	24 HRS/DAY
G Operating Days Per Week	7 DAYS/WK
H Cost Per Fuel Unit (3)	$0.37 $/UNIT
I Heating Fuel Type	Natural Gas
J BTU Per Fuel Unit (4)	100 kBTU/UNIT
K System Efficiency (4)	1.0
L Supply Air Heating Multiplier (5)	0.80

CALCULATION: (D-E) x L x H / (J x K)

SAVINGS = 450,200 kBTU/YEAR

CALCULATION: D x L x H / (J x K)

NOTES:

(1) Determine the New Exhaust Volume by completing TABLE 1. The New Exhaust Volume equals the AVG % RPM x the Previous Exhaust Volume.

(2) Using design weather data via the Outdoor Airload Calculator and multiplied by days/year ratio.

(3) Using local energy costs.

(4) Using typical system efficiency.

TABLE 1

% Rated RPM (F)	% Run Time (I)	F x I
100%	15%	15%
90%	10%	9%
80%	5%	4%
70%	10%	7%
60%	15%	9%
50%	5%	3%
40%	15%	6%
30%	25%	8%
20%	0%	0%
10%	0%	0%

Project	Kitchen Compressor Replacement		
Site	SCI Muncy		
Description	Replacement of existing compressor with a new compressor and a high efficiency motor		
Givens	**Existing**		**Source**
	Motor Size	*15*	(nameplate)
	Motor Efficiency	*84.10%*	(nameplate)
	Motor RPM	*1750*	(nameplate)
	Proposed		**Source**
	Motor Size	*15*	(design selection)
	Motor Efficiency	*94.10%*	(design selection)
	Motor RPM	*1750*	(design selection)
Assumptions	Motor Load Factor	*85%*	
	Hours per Day	24	
	Days per Year	365	
Formula	Motor Power (kW)	=	(Motor Horsepower x 0.746 (kW/hp) x Load Factor) / (Efficiency)
	Speed Corr. Factor	=	((New RPM)/(Existing RPM)) ^ 3
	Existing Energy Use (kWh)	=	(kW) x (Hours of Use)
	New Energy Use (kWh)	=	(kW) x (Hours of Use) x (Speed Correction Factor)
	Total Savings (kWh)	=	(Existing Energy Use) - (New Energy Use)

Energy Savings Table

			Existing Motor				New Motor									
Bldg	**Number**	**Description**	**HP**	**eff.**	**RPM**	**kW**	**HP**	**eff.**	**RPM**	**kW**	**Load Factor**	**Annual Hours**	**Speed Corr.**	**Existing kWh**	**New kWh**	**Total kWh Savings**
Kitchen	1	Compressor	15	0.841	1,750	12.566	15	0.941	1,750	10.108	0.85	8,760	1.00	159,974	88,545	71,429

ECM:

Title: **High Efficiency Water Heater Installation**

Project: **Unit B Elect to Gas DHW**

Site:

Description **Removal of an existing electric domestic water heater and replacing with a high efficiency natural gas model.**

Given	Occupied Days/Year	=	365	Days
	Existing Temperature Setpoint	=	120	Degrees F
	Type of Facility	=	Prison	
Assumptions	Number of People in Facility	=	200	
	DHW Usage	=	13.10	gal/person/day *
	City Water Temperature	=	50	Degrees F
	Energy to heat water	=	1	Btu/Gal/Deg
	Existing Boiler Efficiency	=	100%	
	Proposed Boiler Efficiency	=	75%	

Formula

Heating Value for Gallon of Water = 1btu/1lb water x 8lbs/gal x (DHW Setpoint - Incoming Water Temperature)

Existing Energy Usage = ((DHW usage x No. of People x Occupied Days/Year x Heating Value per gal Water)/Existing Efficiency)/btu per unit

Proposed Energy Usage = ((DHW usage x No. of People x Occupied Days/Year x Heating Value per gal Water)Proposed Efficiency)/btu per unit

Calculation

Heating Value for Gallon of Water =	1	x	8	x (	120	-	50	)				=	**560**	**btu/gal**
	DHW Usage		No. of People		Occupied Days/Yr		Htg Value		Htr Eff.		Btu/ Unit			
Existing Energy Usage =((	13.10	x	200	x	365	x	560	)/	100%	)/	3,412	=	**156954**	**KWH**
Proposed Energy Usage =((	13.10	x	200	x	365	x	560	)/	75%	)/	1,000,000	=	**714**	**MMBtu Gas**

TITLE: **Electric to Gas Heating Unit B**
PROJECT: SCI MUNCY
SITE:

DESCRIPTION: When fuel costs are less expensive than electric, converting from electric to fuel heating results in reduce cost.

GIVEN:

Heating Plant Capacity	=	400	Kw
Operation (Hours/Week)	=	168.00	Hours/Week
Operation (Heating Weeks/Year)	=	28.00	Weeks/Year
Operation (Hours/Year)	=	4704	Hours/Year
Annual Heating Plant Energy Cost	=	$100,000	

ASSUMPTION:

Efficiency (Fuel)	=	85%
Efficiency (Electric)	=	100%
Operating Months per Year	=	8
Part Load Factor	=	55%
Utilization Factor (Demand)	=	70%

FORMULA:
Energy Use (Kwh) = (Capacity(Kw)) x (Hours of Operation/Year) x (Part Load Factor) / (Electric Efficiency)
Fuel Use (Unit) = (Electrical Use(Kwh)) x (3413 btu/kw) x (Electrical Efficiency) / (Fuel Efficiency) / (Heating Value of Fuel)
Energy Demand (Kw) = (Capacity (Kw)) x (Months/Year) x (Demand Utilization Factor)

CALCULATION:

	Capacity		Hours/Year		Part Load Factor		Efficiency (Electric)			
Electric Usage = (	400	)x(	4704	)x(	55%	)/(	100%	) =	**1,034,880**	**Kwh**

	Electrical Use		Conversion		Efficiency (Electric)		Efficiency (Fuel)		Conversion			
Fuel Usage = (	1,034,880	)x(	3,413	) x (	100%	)/(	85%	)/(	1,000,000	) =	**4,204**	**MMBtu Gas**

Replace steam and condensate lines of the West Loop

Assumptions:

1	Number of Leaks per 100 feet of piping	3	Qty.
2	Total Number of Feet, with leaking pipe	1200	Feet
3	Average Leak Diameter	0.125	in
4	Absolute Pressure of Steam	40	psi
5	Operating Hours, annual	8,760	Hrs/yr
6	Heat Capacity of Steam	1187.2	btu/lb
7	Boiler System Efficiency	75%	

Calculations:

1	Steam Loss per Leak = Leak Diameter^2 x Absolute Pressure of Steam x Constant (40)	25	lbs/hr
2	Steam Loss, total = Number of Leaks per 100 feet x (Total Number of Feet / 100) x Steam Loss per Leak	900	lbs/hr
3	**Fuel Savings = Steam Loss, total x Heat Capacity of Steam x Operating Hours / (Boiler Efficiency x 10^6)**	**13,361**	**MMBtu/yr**

Improvement: Energy Management System Control Strategy

Description:
Install building automation system that will allow the heating systems to be adjusted and maintained at a reduced temperature setting during mild weather.

Methodology:
Davings are based on the prevention of building over heating through the use of a centralized Energy Management System. Savings occur in the shoulder months primarily with some in the coldest months also.

Date	Current Gas	Proposed Gas
June	3,575	3,575
July	3,354	3,354
August	3,467	3,467
September	6,585	4,610
October	8,349	5,844
November	10,714	8,571
December	10,843	8,674
January	9,094	8,185
February	10,237	8,190
March	6,423	4,496
April	4,768	4,768
May	3,443	3,443
Total	80,852	67,177

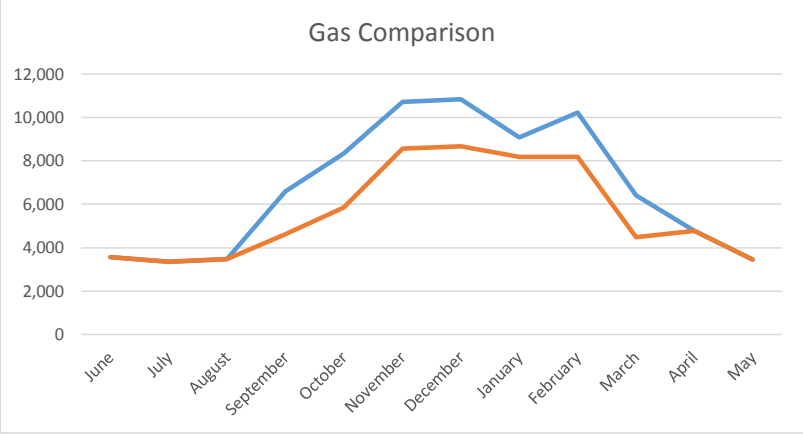

Total Savings = 138,118 Therm

WINDOW REPLACEMENT CALCULATIONS

FACILITY: SCI Muncy Prison - Building A

110	...NUMBER OF WINDOWS
1980	...TOTAL SQ.FT. WINDOW OR WALLTO BE COVERED (WSF)
1.13	...U - VALUE OF EXISTING WALL/GLASS SECTION (UVAL)
0.28	...U - VALUE OF NEW WALL/GLASS SECTION (UVALNEW)
0.95	...SHADING COEFFICIENT OF CURRENT GLASS (SCF)
0.35	...SHADING COEFFICIENT OF NEW GLASS (SCFNEW)
72	...CURRENT OCCUPIED SPACE HEATING SETPOINT (HTSP)
168	...HRS/WK OF BUILDING OCCUPANCY (HRSOCC)
47	...AVERAGE O.A. TEMP. DURING HEATING SEASON (AVEDBT)
672	...HEATING HRS/YR FROM WEATHER DATA (HHPY)

(Occupied Heating) (UVAL - UVALNEW) * WSF * (HTSP - AVEDBT) * HHPY * (HRSOCC / 168) / 1,000,000 ========== 349.2 MMBTU

WINDOW REPLACEMENT CALCULATIONS

FACILITY: SCI Muncy Prison - Building C

120	...NUMBER OF WINDOWS
2160	...TOTAL SQ.FT. WINDOW OR WALLTO BE COVERED (WSF)
1.13	...U - VALUE OF EXISTING WALL/GLASS SECTION (UVAL)
0.28	...U - VALUE OF NEW WALL/GLASS SECTION (UVALNEW)
0.95	...SHADING COEFFICIENT OF CURRENT GLASS (SCF)
0.35	...SHADING COEFFICIENT OF NEW GLASS (SCFNEW)
72	...CURRENT OCCUPIED SPACE HEATING SETPOINT (HTSP)
168	...HRS/WK OF BUILDING OCCUPANCY (HRSOCC)
47	...AVERAGE O.A. TEMP. DURING HEATING SEASON (AVEDBT)
672	...HEATING HRS/YR FROM WEATHER DATA (HHPY)

(Occupied Heating) (UVAL - UVALNEW) * WSF * (HTSP - AVEDBT) * HHPY * (HRSOCC / 168) / 1,000,000 ========== 380.9 MMBTU

WINDOW REPLACEMENT CALCULATIONS

FACILITY: SCI Muncy Prison - Building E

113	...NUMBER OF WINDOWS
2034	...TOTAL SQ.FT. WINDOW OR WALLTO BE COVERED (WSF)
1.13	...U - VALUE OF EXISTING WALL/GLASS SECTION (UVAL)
0.28	...U - VALUE OF NEW WALL/GLASS SECTION (UVALNEW)
0.95	...SHADING COEFFICIENT OF CURRENT GLASS (SCF)
0.35	...SHADING COEFFICIENT OF NEW GLASS (SCFNEW)
72	...CURRENT OCCUPIED SPACE HEATING SETPOINT (HTSP)
168	...HRS/WK OF BUILDING OCCUPANCY (HRSOCC)
47	...AVERAGE O.A. TEMP. DURING HEATING SEASON (AVEDBT)
672	...HEATING HRS/YR FROM WEATHER DATA (HHPY)

(Occupied Heating) (UVAL - UVALNEW) * WSF * (HTSP - AVEDBT) * HHPY * (HRSOCC / 168) / 1,000,000 ========== 358.7 MMBTU

WINDOW REPLACEMENT CALCULATIONS

FACILITY: SCI Muncy Prison - Building G

78	...NUMBER OF WINDOWS
1404	...TOTAL SQ.FT. WINDOW OR WALLTO BE COVERED (WSF)
1.13	...U - VALUE OF EXISTING WALL/GLASS SECTION (UVAL)
0.28	...U - VALUE OF NEW WALL/GLASS SECTION (UVALNEW)
0.95	...SHADING COEFFICIENT OF CURRENT GLASS (SCF)
0.35	...SHADING COEFFICIENT OF NEW GLASS (SCFNEW)
72	...CURRENT OCCUPIED SPACE HEATING SETPOINT (HTSP)
168	...HRS/WK OF BUILDING OCCUPANCY (HRSOCC)
47	...AVERAGE O.A. TEMP. DURING HEATING SEASON (AVEDBT)
672	...HEATING HRS/YR FROM WEATHER DATA (HHPY)

(Occupied Heating) (UVAL - UVALNEW) * WSF * (HTSP - AVEDBT) * HHPY * (HRSOCC / 168) / 1,000,000 ========== 247.6 MMBTU

WINDOW REPLACEMENT CALCULATIONS

FACILITY: SCI Muncy Prison - Building I

55	...NUMBER OF WINDOWS
990	...TOTAL SQ.FT. WINDOW OR WALLTO BE COVERED (WSF)
1.13	...U - VALUE OF EXISTING WALL/GLASS SECTION (UVAL)
0.28	...U - VALUE OF NEW WALL/GLASS SECTION (UVALNEW)
0.95	...SHADING COEFFICIENT OF CURRENT GLASS (SCF)
0.35	...SHADING COEFFICIENT OF NEW GLASS (SCFNEW)
72	...CURRENT OCCUPIED SPACE HEATING SETPOINT (HTSP)
168	...HRS/WK OF BUILDING OCCUPANCY (HRSOCC)
47	...AVERAGE O.A. TEMP. DURING HEATING SEASON (AVEDBT)
672	...HEATING HRS/YR FROM WEATHER DATA (HHPY)

(Occupied Heating) (UVAL - UVALNEW) * WSF * (HTSP - AVEDBT) * HHPY * (HRSOCC / 168) / 1,000,000 ========== 174.6 MMBTU

Project:	SCI Muncy
CM:	Water Conservation
Date:	4/18/2018

residential
other

	Baseline Allocation		Post Allocation		Savings	
	kgal	MMBtu*	kgal	MMBtu*	kgal	MMBtu*
Toilets	2,028		1,129		899	
Urinals	7		5		2	
Sinks	391	139	109	39	282	100
Showers	658	274	395	165	263	110
Total	3,085	414	1,639	204	1,446	210
					47%	51%

Building Name:	SCI Muncy	SCI Muncy	SCI Muncy	SCI Muncy	-	-	-	-	-	-	-	-
Population Name:	Inmate - Non Housing	Inmate Dorm	Staff	Visitor	0	0	0	0	0	0	0	0
Total Population	1,475	135	500	50	0	0	0	0	0	0	0	0
% Male	0%	0%	20%	50%	0%	0%	0%	0%	0%	0%	0%	0%
Avg Hours/Week/Person (**for FTE only**)**	0	0	40	0	0	0	0	0	0	0	0	0
Weeks per Year	52	52	48	52	0	0	0	0	0	0	0	0
Avg % Occupancy During Weeks/Year	100%	100%	95%	100%	0%	0%	0%	0%	0%	0%	0%	0%
FTE* (see definition below)	0	0	456	0	0	0	0	0	0	0	0	0
% of Population Showering	0%	100%	10%	0%	0%	0%	0%	0%	0%	0%	0%	0%
Number of Showers/Week/Person	0	7	1	0	0	0	0	0	0	0	0	0
% male access to urinals	0%	0%	10%	0%	0%	0%	0%	0%	0%	0%	0%	0%
# of Days/Year That Cleaning Occurs	365	365	365	0	0	0	0	0	0	0	0	0
% of Occupancy Using Bathrooms	20%	100%	0%	20%	0%	0%	0%	0%	0%	0%	0%	0%
Number of Uses/Person/Day (toilet,urinal,sink)	1.0	6.0	0.0	1.0	0.0	0.0	0.0	0.0	0.0	0.0	0.0	0.0
Number of Days/Year	365	365	0	208	0	0	0	0	0	0	0	0

Use amber cells whenever calculations are based on bathroom uses/day/person as opposed to people occupancy-hours

** FTE Based on the Following Occupancy	
8	Hours/Day
5	Days/Week
50	Weeks/Year

FTE-Based Usage Profiles				
	Toilet	**Urinal**	**Sink**	**Shower**
Sec/Use			15	
Min/Use				5
Cold Water Temp			60	60
Warm Water Temp			105	110
Female FTE Uses/Day	**3.0**		**3.0**	
Male FTE Uses/Day	**1.0**	**2.0**	**3.0**	
Sink blended warm water consumption as % of total sink water consumption				95%
Shower blended warm use as % of total shower use				100%

Select Residential or other Non-FTE-Based Usage Profiles: *other*				
	Toilet	**Urinal**	**Sink**	**Shower**
Sec/Use			15	
Min/Use				5
Cold Water Temp			60	60
Warm Water Temp			105	110
Female Uses % of UPD	100%		100%	
Male Uses % of UPD	33%	67%	100%	
Sink blended warm water use as % of total sink water use				95%
Shower blended warm water use as a % of total shower use				100%

Cleaning Profiles				
	Toilet	**Urinal**	**Sink**	**Shower**
Washes/Day			1	1
Sec/Wash			30	60
Flushes/Day	1	1		

Cleaning Profiles				
	Toilet	**Urinal**	**Sink**	**Shower**
Washes/Day			1	1
Sec/Wash			30	60
Flushes/Day	1	1		

Project: SCI Muncy
CM: Water Conservation
Date: 4/18/2018

residential
other

Bathroom Group Table	DOMESTIC WATER FIXTURE UTILIZATION MODEL											
Building or Facility:	**SCI Muncy**	**SCI Muncy**	**SCI Muncy**	**SCI Muncy**	-	-	-	-	-	-	-	-
Populations:	**Inmate - Non Housing**	**Inmate Dorm**	**Staff**	**Visitor**	-	-	-	-	-	-	-	-
Fixture Utilization (gallons)												
Number of FTEs	0	0	456	0	0	0	0	0	0	0	0	0
Number male FTEs	0	0	91	0	0	0	0	0	0	0	0	0
Toilet Usage FTE Flushes/FTE Day	0	0	1,350	0	0	0	0	0	0	0	0	0
Toilet Average Cleaning Flushes/Cleaning Day	18	18	66	66	0	0	0	0	0	0	0	0
Toilet Usage Assigned Person Flushes/Day	295	810	0	10	0	0	0	0	0	0	0	0
Urinal Usage FTE Flushes/FTE Day	0	0	18	0	0	0	0	0	0	0	0	0
Urinal Average Cleaning Flushes/Cleaning Day	0	0	1	0	0	0	0	0	0	0	0	0
Urinal Usage Assigned Person Flushes/Day	0	0	0	0	0	0	0	0	0	0	0	0
Sink Usage FTE Min/FTE Day	0	0	342	0	0	0	0	0	0	0	0	0
Sink Average Cleaning Min/Cleaning Day	9	10	32	32	0	0	0	0	0	0	0	0
Sink Usage Assigned Person Min/Day	74	203	0	3	0	0	0	0	0	0	0	0
Number of Persons	1,475	135	500	50	0	0	0	0	0	0	0	0
% Occupancy	100%	100%	95%	100%	0%	0%	0%	0%	0%	0%	0%	0%
% of Population Showering	0%	100%	10%	0%	0%	0%	0%	0%	0%	0%	0%	0%
Number of Showers/Week/Person	0	7	1	0	0	0	0	0	0	0	0	0
Minutes/shower	5.0	5.0	5.0	5.0	0.0	0.0	0.0	0.0	0.0	0.0	0.0	0.0
Shower Usage Min/week	0	4,725	238	0	0	0	0	0	0	0	0	0
Shower Average Cleaning Min/Cleaning Day	0	16	1	0	0	0	0	0	0	0	0	0
Baseline Annual kgal Water Consumption												
Toilets 2,028	328	544	1,150	7	0	0	0	0	0	0	0	0
Urinals 7	0	0	7	0	0	0	0	0	0	0	0	0
Sinks 391	57	135	198	1	0	0	0	0	0	0	0	0
Showers 658	0	629	29	0	0	0	0	0	0	0	0	0
Total Baseline kgal 3,085	385	1,308	1,384	8	0	0	0	0	0	0	0	0
Baseline annual MMbtu Consumption												
Sinks 139	20	48	71	0	0	0	0	0	0	0	0	0
Showers 274	0	262	12	0	0	0	0	0	0	0	0	0
Totals 414	20	310	83	0	0	0	0	0	0	0	0	0
Post-Retrofit Annual gal Water Consumption												
Toilets 1,129	162	484	481	3	0	0	0	0	0	0	0	0
Urinals 5	0	0	5	0	0	0	0	0	0	0	0	0
Sinks 109	15	39	55	0	0	0	0	0	0	0	0	0
Showers 395	0	377	18	0	0	0	0	0	0	0	0	0
Total Post-Retrofit kgal 1,639	177	900	559	3	0	0	0	0	0	0	0	0
Post-Retrofit annual MMBtu Consumption												
Sinks 39	5	14	20	0	0	0	0	0	0	0	0	0
Showers 165	0	157	7	0	0	0	0	0	0	0	0	0
Totals 204	5	171	27	0	0	0	0	0	0	0	0	0
Annual kgal Water Savings												
Toilets 899	166	60	669	4	0	0	0	0	0	0	0	0
Urinals 2	0	0	2	0	0	0	0	0	0	0	0	0
Sinks 282	42	96	143	1	0	0	0	0	0	0	0	0
Showers 263	0	252	12	0	0	0	0	0	0	0	0	0
Total Annual kgal Savings 1,446	208	408	826	5	0	0	0	0	0	0	0	0
Annual mmbtu Savings												
Sinks 100	15	34	51	0	0	0	0	0	0	0	0	0
Showers 110	0	105	5	0	0	0	0	0	0	0	0	0
Total Annual mmbtu Savings 210	15	139	56	0	0	0	0	0	0	0	0	0

Project:	SCI Muncy
CM:	Water Conservation
Date:	4/18/2018

residential
other

	DOMESTIC WATER FIXTURE DATA											
Building or Facility:	**SCI Muncy**	**SCI Muncy**	**SCI Muncy**	**SCI Muncy**	-	-	-	-	-	-	-	-
Population:	**Inmate - Non Housing**	**Inmate Dorm**	**Staff**	**Visitor**	-	-	-	-	-	-	-	-
Toilets												
Total number	18	18	66	66								
GPF weighted avg baseline	2.87	1.80	3.18	3.18								
GPF weighted avg post-retrofit	1.42	1.60	1.33	1.33								
Urinals												
Total number			1									
GPF weighted avg baseline			1.50									
GPF weighted avg post-retrofit			1.00									
Sinks												
Total number	17	20	63	63								
GPM weighted avg baseline	1.90	1.74	2.04	2.04								
GPM weighted avg post-retrofit	0.50	0.50	0.57	0.57								
Showers												
Total number		16	1									
GPM weighted avg baseline		2.50	2.50									
GPM weighted avg post-retrofit		1.50	1.50									

Totals	
Annual Savings	
Water/ Sewer (Kgal/Yr)	19,369
Thermal (Therm/Yr)	13,039

Date	4/2/2018
Building	Central Kitchen
ECM	Walk-in Box Controls

Part A	Evaporator Fan Controls Savings

kWh Savings (kWh_A)	57,620	kWh	kW Savings (kW_A)		kW

Input Data

Tag	Condenser					Evaporator Fan					
	Voltage (V_{COMP})	Current (I_{COMP})	Phase (P_{COMP})	Power Factor (PF_{COMP})	kW_{COMP}	No. of Fans (N_F)	Voltage (V_{FAN})	Current/Fan (I_{FAN})	Phase (P_{FAN})	Power Factor (PF_{FAN})	kW_{FAN}
Walk In Freezer	208	60	1	0.85	10.61	4	115	0.45	1	0.85	0.1760
Walk In Freezer	208	60	1	0.85	10.61	4	115	0.45	1	0.85	0.1760
Walk In Freezer	208	60	1	0.85	10.61	4	115	0.45	1	0.85	0.1760
					31.82						**0.53**

Savings Due to Evaporator Fan being Off

Total Fan kW (kW_{FAN})	0.53	kW	Annual Fan Operating Hours (FLH_{FAN})	8,760	hrs	Fraction of time that Evaporator Fan is turned off (F_{OFF})	0.300	
						Savings Due to Evaporator Fan being Off (ΔkWh EF)	6,952	kWh

Savings Due to Reduced Heat from Evaporator Fans

ΔkWh EF	6,952	kW	Unit Conversion (ton/kW)	0.28		Compressor Efficiency (kW/ton)	1.6	kW/ton
						Savings Due to Reduced Heat from Evaporator Fans (ΔkWh RH)	14,308	kWh

Savings Due to Electronic Controls on Compressor and Evaporator

Total Compressor kW (kW_{TCOMP})	31.82	kW		8760				
Compressor Summer Cycling (% On) (Cs)	55%		Summer Season Hours (Hs)	6,570	hrs	Compressor Summer Operating Hours (FLHs)	3,614	hrs
Compressor Winter Cycling (% On) (Cw)	35%		Winter Season Hours (Hw)	2,190	hrs	Compressor Winter Operating Hours (FLHw)	767	hrs
Fraction of time Compressor and Fans are off due to electronic controls ($F_{Control}$)	10%					Savings Due to Electronic Controls on Compressor and Evaporator (ΔkWh EC)	36,360	kWh

Formula Used

(1) $kW_{FAN} = N_F \times V_{FAN} \times I_{FAN} \times (P_{FAN})^{0.5} \times PF_{FAN}/1000$

(2) $kW_{COMP} = V_{COMP} \times I_{COMP} \times (P_{COMP})^{0.5} \times PF_{COMP}/1000$

(3) $kWT_{FAN} = \Sigma\ (kW_{FAN})$

(4) $\Delta kWh\ EF = kW_{TFAN} \times FLH_{FAN} \times F_{OFF}$

F_{OFF} = 0.352 ..... Estimated by National Resource Management based on downloads of hours of use data from electronic controllers ... (Ref - NY State Technical Manual)

(5) ΔkWh RH =ΔkWh EF × (Ton/kW) × Compressor Efficiency (kW/ton)

kW/ton = 1.6 ..... Typical Refrigeration System Efficiency ... (Ref - NY State Technical Manual)

(6) $kW_{TCOMP} = \Sigma\ (kW_{COMP})$

(7) FLHs = Cs × Hs

Cs = 55%, Hs = 6,565 ..... Ref NY State Technical Manual

(8) FLHw = Cw × Hw

Cw = 35%, Hw = 2,195 ..... Ref NY State Technical Manual

(9) $\Delta kWh\ EC = [\ \{kWT_{COMP} \times (\ FLHs + FLHw)\} + \Delta kWh\ EF] \times F_{Control}$

$F_{Control}$ = 5% ..... As per National Resource Management

(10) $kWh_A = \Delta kWh\ EF + \Delta kWh\ RH + \Delta kWh\ EC$

(11) $kW_A = kWT_{FAN} \times DF$

DF = 0.228 ..... (Ref NY State Technical Manual)

D-Series Size 1
LED Area Luminaire

Catalog Number

Notes

Type

Hit the Tab key or mouse over the page to see all interactive elements.

Introduction

The modern styling of the D-Series is striking yet unobtrusive - making a bold, progressive statement even as it blends seamlessly with its environment.

The D-Series distills the benefits of the latest in LED technology into a high performance, high efficacy, long-life luminaire. The outstanding photometric performance results in sites with excellent uniformity, greater pole spacing and lower power density. It is ideal for replacing 100 – 400W metal halide in pedestrian and area lighting applications with typical energy savings of 65% and expected service life of over 100,000 hours.

Specifications

EPA:	1.2 ft² (0.11 m²)
Length:	33″ (83.8 cm)
Width:	13″ (33.0 cm)
Height:	7-1/2″ (19.0 cm)
Weight (max):	27 lbs (12.2 kg)

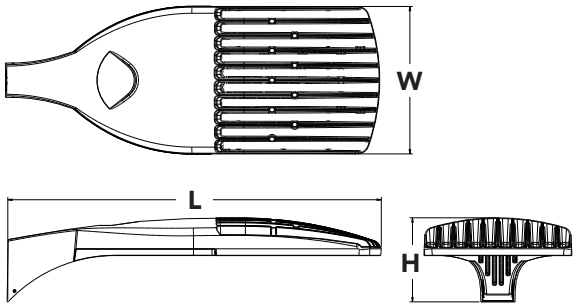

Ordering Information

EXAMPLE: DSX1 LED 60C 1000 40K T3M MVOLT SPA DDBXD

DSX1 LED

Series	LEDs	Drive current	Color temperature	Distribution	Voltage	Mounting	Control options	Other options	Finish *(required)*
DSX1 LED	30C 30 LEDs (one engine) 40C 40 LEDs (two engines) 60C 60 LEDs (two engines)	530 530 mA 700 700 mA 1000 1000 mA (1 A)	30K 3000K (80 CRI min.) 40K 4000K (70 CRI min.)[1] 50K 5000K (67 CRI)	T1S Type I short T2S Type II short T2M Type II medium T3S Type III short T3M Type III medium T4M Type IV medium TFTM Forward throw medium T5VS Type V very short T5S Type V short T5M Type V medium T5W Type V wide	MVOLT[2] 120[2] 208[2] 240[2] 277[2] 347 480	**Shipped included** SPA Square pole mounting RPA Round pole mounting WBA Wall bracket	**Shipped installed** PER NEMA twist-lock receptacle only (no controls) DMG 0-10V dimming driver (no controls)[3] DCR Dimmable and controllable via ROAM® (no controls)[4] DS Dual switching[5,6] PIR Motion sensor, 8-15′ mounting height[7] PIRH Motion sensor, 15-30′ mounting height[8]	**Shipped installed** HS House-side shield[9] WTB Utility terminal block SF Single fuse (120, 277, 347V)[10] DF Double fuse (208, 240, 480V)[10] TLS Tool-less entry trigger latch L90 Left rotated optics[11] R90 Right rotated optics[11]	DDBXD Dark bronze DBLXD Black DNAXD Natural aluminum DWHXD White DDBTXD Textured dark bronze DBLBXD Textured black DNATXD Textured natural aluminum DWHGXD Textured white

Drilling

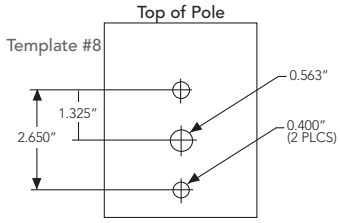

DSX1 shares a unique drilling pattern with the AERIS™ family. Specify this drilling pattern when specifying poles, per the table below.

DM19AS	Single unit	**DM29AS**	2 at 90°
DM28AS	2 at 180°	**DM39AS**	3 at 90°
DM49AS	4 at 90°	**DM32AS**	3 at 120° *

Example: SSA 20 4C **DM19AS** DDBXD

Visit Lithonia Lighting's POLES CENTRAL to see our wide selection of poles, accessories and educational tools.

Accessories

Ordered and shipped separately.

DSS124N 1.5 TJJE U	Photocell - SSL twist-lock (120-277V)[12]
DLL347 1.5 CUL JU	Photocell - SSL twist-lock (347V)[12]
DLL480 1.5 CUL JU	Photocell - SSL twist-lock (480V)[12]
SC U	Shorting cap[12]
DSX1HS U	House-side shield (one per light engine)
SPA19/MR2 DDBXD U	Square pole DM19 to DM19AS adapter (specify finish)
RPA19/MR2 DDBXD U	Round pole DM19 to DM19AS adapter (specify finish)

For more control options, visit DTL and ROAM online.

Tenon Mounting Slipfitter *

Tenon O.D.	Single Unit	2 at 180°	2 at 90°	3 at 120°	3 at 90°	4 at 90°
2-3/8″	AST20-190	AST20-280	AST20-290	AST20-320	AST20-390	AST20-490
2-7/8″	AST25-190	AST25-280	AST25-290	AST25-320	AST25-390	AST25-490
4″	AST35-190	AST35-280	AST35-290	AST35-320	AST35-390	AST35-490

** For round pole mounting (RPA) only.*

NOTES

1. Configured with 4000K (40K) provides the shortest lead times. Consult factory for 3000K (30K) and 5000K (50K) lead times.
2. MVOLT driver operates on any line voltage from 120-277V (50/60 Hz). Specify 120, 208, 240 or 277 options only when ordering with fusing (SF, DF options).
3. Not available with 347 or 480V.
4. Specifies a ROAM® enabled luminaire with 0-10V dimming capability; PER option required. Not available with 347 or 480V. Additional hardware and services required for ROAM® deployment; must be purchased separately. Call 1-800-442-6745 or email: sales@roamservices.net.
5. Requires 40C or 60C. Provides 50/50 luminaire operation via two independent drivers on two separate circuits. N/A with PER, DCR, DMG or WTB.
6. Requires an additional switched line.
7. Specifies the SensorSwitch SBR-10-ODP control; see Motion Sensor Guide for details. Dimming driver standard. Not available with DCR or WTB.
8. Specifies the SensorSwitch SBR-6-ODP control; see Motion Sensor Guide for details. Dimming driver standard. Not available with DCR or WTB.
9. Also available as a separate accessory; see Accessories information.
10. Single fuse (SF) requires 120, 277 or 347 voltage option. Double fuse (DF) requires 208, 240 or 480 voltage option.
11. Available with 60 LEDs (60C option) only.
12. Requires luminaire to be specified with PER option. Ordered and shipped as a separate line item.

LITHONIA LIGHTING

One Lithonia Way • Conyers, Georgia 30012 • Phone: 800.279.8041 • Fax: 770.918.1209 • www.lithonia.com

© 2011-2013 Acuity Brands Lighting, Inc. All rights reserved.

Performance Data

Lumen Output

Lumen values are from photometric tests performed in accordance with IESNA LM-79-08. Data is considered to be representative of the configurations shown, within the tolerances allowed by Lighting Facts. Actual wattage may differ by +/- 8% when operating between 120-480V +/-10%. Contact factory for performance data on any configurations not shown here.

Light Engines	Drive Current (mA)	Performance Package	System Watts	Dist. Type	30K (3000K, 80 minimum CRI)					40K (4000K, 70 minimum CRI)					50K (5000K, 67 CRI)				
					Lumens	B	U	G	LPW	Lumens	B	U	G	LPW	Lumens	B	U	G	LPW
30C (30 LEDs)	700 mA	30C 700 --K	68 W	T1S	5,290	1	0	1	78	6,524	2	0	2	96	7,053	2	0	2	104
				T2S	5,540	1	0	1	81	6,833	2	0	2	100	7,387	2	0	2	109
				T2M	5,360	1	0	2	79	6,611	2	0	2	97	7,147	2	0	2	105
				T3S	5,479	1	0	1	81	6,757	1	0	2	99	7,305	2	0	2	107
				T3M	5,452	1	0	2	80	6,724	2	0	2	99	7,269	2	0	2	107
				T4M	5,461	1	0	2	80	6,736	2	0	2	99	7,282	2	0	2	107
				TFTM	5,378	1	0	2	79	6,633	1	0	2	98	7,171	1	0	2	105
				T5VS	5,708	2	0	0	84	7,040	3	0	0	104	7,611	3	0	1	112
				T5S	5,639	2	0	0	83	6,955	2	0	0	102	7,519	3	0	0	111
				T5M	5,710	3	0	1	84	7,042	3	0	1	104	7,613	3	0	2	112
				T5W	5,551	3	0	1	82	6,847	3	0	2	101	7,401	3	0	2	109
	1000 mA	30C 1000 --K	105 W	T1S	7,229	2	0	2	69	9,168	2	0	2	87	9,874	2	0	2	94
				T2S	7,572	2	0	2	72	9,603	2	0	2	91	10,342	2	0	2	98
				T2M	7,325	2	0	2	70	9,291	2	0	2	88	10,005	2	0	3	95
				T3S	7,488	2	0	2	71	9,496	2	0	2	90	10,227	2	0	2	97
				T3M	7,451	2	0	2	71	9,450	2	0	2	90	10,177	2	0	2	97
				T4M	7,464	2	0	2	71	9,467	2	0	2	90	10,195	2	0	2	97
				TFTM	7,351	1	0	2	70	9,323	2	0	2	89	10,040	2	0	3	96
				T5VS	7,801	3	0	1	74	9,894	3	0	1	94	10,655	3	0	1	101
				T5S	7,803	3	0	2	74	9,774	3	0	1	93	10,526	3	0	1	100
				T5M	7,707	3	0	0	73	9,897	3	0	2	94	10,658	4	0	2	102
				T5W	7,586	3	0	2	72	9,621	4	0	2	92	10,363	4	0	2	99
40C (40 LEDs)	700 mA	40C 700 --K	89 W	T1S	6,876	2	0	2	77	8,639	2	0	2	97	9,345	2	0	2	105
				T2S	7,202	2	0	2	81	9,049	2	0	2	102	9,788	2	0	2	110
				T2M	6,968	2	0	2	78	8,755	2	0	2	98	9,469	2	0	3	106
				T3S	7,122	2	0	2	80	8,948	2	0	2	101	9,679	2	0	2	109
				T3M	7,088	2	0	2	80	8,905	2	0	2	100	9,632	2	0	2	108
				T4M	7,100	2	0	2	80	8,920	2	0	2	100	9,649	2	0	2	108
				TFTM	6,992	1	0	2	79	8,785	2	0	2	99	9,502	2	0	2	107
				T5VS	7,421	3	0	0	83	9,323	3	0	1	105	10,085	3	0	1	113
				T5S	7,331	2	0	0	82	9,210	3	0	1	103	9,962	3	0	1	112
				T5M	7,423	3	0	2	83	9,326	3	0	2	105	10,087	4	0	2	113
				T5W	7,216	3	0	2	81	9,066	4	0	2	102	9,807	4	0	2	110
	1000 mA	40C 1000 --K	138 W	T1S	9,521	2	0	2	69	11,970	2	0	2	87	12,871	3	3	0	93
				T2S	9,972	2	0	2	72	12,558	3	0	3	91	13,481	3	0	3	98
				T2M	9,648	2	0	3	70	12,149	3	0	3	88	13,043	3	0	3	95
				T3S	9,862	2	0	2	71	12,418	2	0	2	90	13,331	2	0	2	97
				T3M	9,814	2	0	2	71	12,358	3	0	3	90	13,267	3	0	3	96
				T4M	9,831	2	0	2	71	12,379	2	0	3	90	13,290	2	0	3	96
				TFTM	9,681	2	0	2	70	12,191	2	0	3	88	13,087	2	0	3	95
				T5VS	10,275	3	0	1	74	12,937	3	0	1	94	13,890	4	0	1	101
				T5S	10,150	3	0	1	74	12,782	3	0	1	93	13,721	3	0	1	99
				T5M	10,278	4	0	2	74	12,942	4	0	2	94	13,894	4	0	2	101
				T5W	9,991	4	0	2	72	12,582	4	0	2	91	13,507	4	0	2	98
60C (60 LEDs)	700 mA	60C 700 --K	131 W	T1S	10,226	2	0	2	78	12,871	3	0	3	98	13,929	3	0	3	106
				T2S	10,711	2	0	2	82	13,481	3	0	3	103	14,589	3	0	3	111
				T2M	10,363	2	0	3	79	13,043	3	0	3	100	14,115	3	0	3	108
				T3S	10,592	2	0	2	81	13,331	2	0	2	102	14,427	3	0	3	110
				T3M	10,541	2	0	2	80	13,267	3	0	3	101	14,357	3	0	3	110
				T4M	10,559	2	0	2	81	13,290	2	0	3	101	14,382	3	0	3	110
				TFTM	10,398	2	0	3	79	13,087	2	0	3	100	14,163	2	0	3	108
				T5VS	11,036	3	0	1	84	13,890	4	0	4	106	15,032	4	0	1	115
				T5S	10,902	3	0	1	83	13,721	3	0	1	105	14,849	4	0	1	113
				T5M	11,039	4	0	2	84	13,894	4	0	2	106	15,036	4	0	2	115
				T5W	10,732	4	0	2	82	13,507	4	0	2	103	14,617	4	0	2	112
	1000 mA	60C 1000 --K	209 W	T1S	14,017	3	0	3	67	17,632	3	0	3	84	19,007	3	0	3	91
				T2S	14,681	3	0	3	70	18,467	3	0	3	88	19,908	3	0	3	95
				T2M	14,204	3	0	3	68	17,867	3	0	3	85	19,260	3	0	3	92
				T3S	14,518	3	0	3	69	18,262	3	0	3	87	19,687	3	0	3	94
				T3M	14,448	3	0	3	69	18,173	3	0	4	87	19,591	3	0	4	94
				T4M	14,473	3	0	3	69	18,205	3	0	3	87	19,625	3	0	4	94
				TFTM	14,253	2	0	3	68	17,928	3	0	4	86	19,326	3	0	4	92
				T5VS	15,127	4	0	1	72	19,028	4	0	1	91	20,512	4	0	1	98
				T5S	14,943	4	0	1	71	18,797	4	0	1	90	20,263	4	0	1	97
				T5M	15,131	4	0	2	72	19,033	4	0	2	91	20,517	5	0	3	98
				T5W	14,710	4	0	2	70	18,503	5	0	3	89	19,946	5	0	3	95

© 2011-2013 Acuity Brands Lighting, Inc. All rights reserved.

Performance Data

Lumen Ambient Temperature (LAT) Multipliers

Use these factors to determine relative lumen output for average ambient temperatures from 0-40°C (32-104°F).

Ambient		Lumen Multiplier
0°C	32°F	1.02
10°C	50°F	1.01
20°C	68°F	1.00
25°C	**77°F**	**1.00**
30°C	86°F	1.00
40°C	104°F	0.99

Electrical Load

			Current (A)					
Number of LEDs	Drive Current (mA)	System Watts	120	208	240	277	347	480
30	530	52	0.52	0.30	0.26	0.23	0.18	0.13
	700	68	0.68	0.39	0.34	0.30	0.24	0.17
	1000	105	1.03	0.59	0.51	0.45	0.36	0.26
40	530	68	0.67	0.39	0.34	0.29	0.23	0.17
	700	89	0.89	0.51	0.44	0.38	0.31	0.22
	1000	138	1.35	0.78	0.67	0.58	0.47	0.34
60	530	99	0.97	0.56	0.48	0.42	0.34	0.24
	700	131	1.29	0.74	0.65	0.56	0.45	0.32
	1000	209	1.98	1.14	0.99	0.86	0.69	0.50

Projected LED Lumen Maintenance

Data references the extrapolated performance projections for the platforms noted in a **25°C ambient**, based on 10,000 hours of LED testing (tested per IESNA LM-80-08 and projected per IESNA TM-21-11).

To calculate LLF, use the lumen maintenance factor that corresponds to the desired number of operating hours below. For other lumen maintenance values, contact factory.

Operating Hours	0	25,000	50,000	100,000
Lumen Maintenance Factor	DSX1 LED 60C 1000			
	1.0	0.95	0.93	0.88
	DSX1 LED 60C 700			
	1.0	0.99	0.98	0.96

Photometric Diagrams

To see complete photometric reports or download .ies files for this product, visit Lithonia Lighting's D-Series Area Size 1 homepage.

Isofootcandle plots for the DSX1 LED 60C 1000 40K. Distances are in units of mounting height (20').

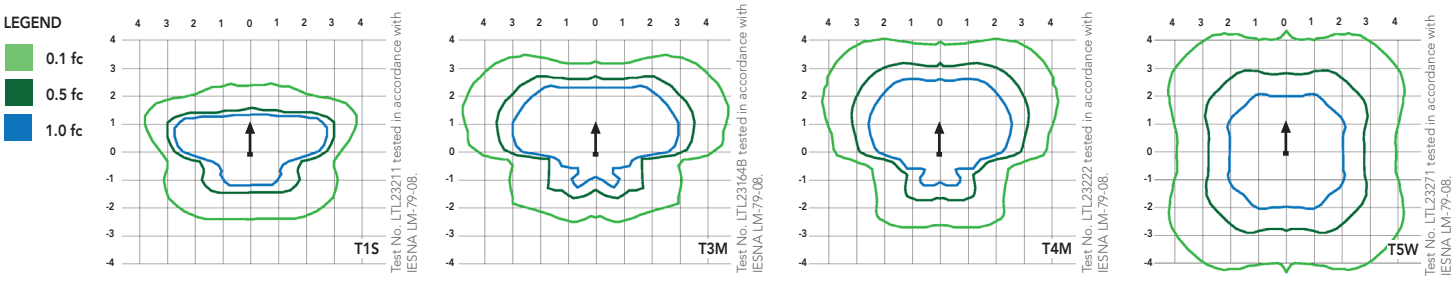

FEATURES & SPECIFICATIONS

INTENDED USE

The sleek design of the D-Series Size 1 reflects the embedded high performance LED technology. It is ideal for many commercial and municipal applications, such as parking lots, plazas, campuses, and streetscapes.

CONSTRUCTION

Single-piece die-cast aluminum housing has integral heat sink fins to optimize thermal management through conductive and convective cooling. Modular design allows for ease of maintenance and future light engine upgrades. The LED driver is mounted in direct contact with the casting to promote low operating temperature and long life. Housing is completely sealed against moisture and environmental contaminants (IP65). Low EPA (1.2 ft^2) for optimized pole wind loading.

FINISH

Exterior parts are protected by a zinc-infused Super Durable TGIC thermoset powder coat finish that provides superior resistance to corrosion and weathering. A tightly controlled multi-stage process ensures a minimum 3 mils thickness for a finish that can withstand extreme climate changes without cracking or peeling. Available in both textured and non-textured finishes.

OPTICS

Precision-molded proprietary acrylic lenses are engineered for superior area lighting distribution, uniformity, and pole spacing. Light engines are available in standard 4000K (70 minimum CRI) or optional 3000K (80 minimum CRI) or 5000K (67 CRI) configurations. The D-Series Size 1 has zero uplight and qualifies as a Nighttime Friendly™ product, meaning it is consistent with the LEED® and Green Globes™ criteria for eliminating wasteful uplight.

ELECTRICAL

Light engine configurations consist of 30, 40 or 60 high-efficacy LEDs mounted to metal-core circuit boards to maximize heat dissipation and promote long life (up to L96/100,000 hours at 25°C). Class 1 electronic drivers are designed to have a power factor >90%, THD <20%, and an expected life of 100,000 hours with <1% failure rate. Easily serviceable 10kV or 6kV surge protection device meets a minimum Category C Low operation (per ANSI/IEEE C62.41.2).

INSTALLATION

Included mounting block and integral arm facilitate quick and easy installation. Stainless steel bolts fasten the mounting block securely to poles and walls, enabling the D-Series Size 1 to withstand up to a 3.0 G vibration load rating per ANSI C136.31. The D-Series Size 1 utilizes the AERIS™ series pole drilling pattern. Optional terminal block, tool-less entry, and NEMA photocontrol receptacle are also available.

LISTINGS

CSA certified to U.S. and Canadian standards. Light engines are IP66 rated; luminaire is IP65 rated. Rated for -40°C minimum ambient. U.S. Patent No. D672,492 S. International patent pending.

WARRANTY

Five-year limited warranty. Full warranty terms located at:
www.acuitybrands.com/CustomerResources/Terms_and_conditions.aspx

Note: Specifications subject to change without notice.

© 2011-2013 Acuity Brands Lighting, Inc. All rights reserved.

LITHONIA LIGHTING®

Catalog Number	
Notes	
Type	

LED High Bay

IBG

FEATURES & SPECIFICATIONS

INTENDED USE — Ideal one-for-one replacement of conventional HID and fluorescent high bay systems. Applications include warehousing, manufacturing, gymnasiums, and other large indoor spaces with mounting heights up to 60'. **Certain airborne contaminants can diminish the integrity of acrylic and/or polycarbonate.** **Click here for Acrylic-Polycarbonate Compatibility table for suitable uses.**

CONSTRUCTION — Structural elements such as the channel and end caps are fabricated from steel for maximum rigidity. Wireguard attachment points provided. For high ambient (HA) option, lightweight aluminum heat sink designed to perform in ambient temperatures up to 55 ° C for maximum naturally convective cooling.

OPTICS — General, narrow, wide and focus distributions available to meet both horizontal and vertical light level requirements. Injection molded refractors for repeatable photometry. Diffuse lens standard to provide glare control and LED protection. Optics are IP5X rated.

ELECTRICAL — L88 at 60,000 hours, L70>100,000 hours. Utilizes a 90°C case temperature driver for maximum life at high temperatures. 0.90 power factor and 3kA/6kV level of surge protection is standard. Optional 5kA/10kV surge protection available. Available as 120-277V or 347-480V input.

0-10V dimming standard for a dimming range of 100% to 10%.

WIRELESS NETWORKING — XPoint™ Wireless technology creates a mesh network to ensure communication between fixtures, sensors and wall stations facility-wide. This option provides superior lighting management capabilities including granular control, configuration and custom grouping for increased energy savings.

INSTALLATION — Suitable for suspension by chain, cable, surface-mounting bracket (THUN accessory), hook monopoint or single (pendant) monopoint. Surface mounting not recommended without optional surface mounting bracket. To maintain ambient listing, fixture should be mounted at a minimum plenum height of 18".

LISTINGS — CSA certified to US and Canadian safety standards. Damp location listed. Suitable for ambient temperatures from -40°F (-40°C) to 113°F (45°C) when suspended 18" from ceiling. High ambient option available (HA), suitable for ambient temperatures -40°F (-40°C) to131°F (55°C) when suspended 18" from ceiling. The Bluetooth® word mark and logos are registered trademarks owned by Bluetooth SIG, Inc. and any use of such marks by Acuity Brands is under license. Other trademarks and trade names are those of their respective owners.

DesignLights Consortium® (DLC) Premium qualified product and DLC qualified product. Not all versions of this product may be DLC Premium qualified or DLC qualified. Please check the DLC Qualified Products List at www.designlights.org/QPL to confirm which versions are qualified.

WARRANTY — 5-year limited warranty. Complete warranty terms located at: www.acuitybrands.com/CustomerResources/Terms_and_conditions.aspx

Note: Actual performance may differ as a result of end-user environment and application. All values are design or typical values, measured under laboratory conditions at 25 °C. Specifications subject to change without notice.

Stock configurations are offered for shorter lead times:

Standard Part Number	Stock Part Number	DLC QPL Product ID	DLC Premium?
IBG 12000LM SEF AFL GND MVOLT OZ10 40K 80CRI DWH	**IBG 12L MVOLT**	**PAMMN2VX**	√
IBG 15000LM SEF AFL GND MVOLT OZ10 40K 80CRI DWH	**IBG 15L MVOLT**	**P3G6HADN**	√
IBG 18000LM SEF AFL GND MVOLT OZ10 40K 80CRI DWH	**IBG 18L MVOLT**	**P851GVEP**	√
IBG 24000LM SEF AFL GND MVOLT OZ10 40K 80CRI DWH	**IBG 24L MVOLT**	**PZBJQY5S**	√
IBG 12000LM SEF AFL GND HVOLT OZ10 40K 80CRI DWH	**IBG 12L HVOLT**	**PQ5BU878**	√
IBG 15000LM SEF AFL GND HVOLT OZ10 40K 80CRI DWH	**IBG 15L HVOLT**	**PSWUYJP8**	√
IBG 18000LM SEF AFL GND HVOLT OZ10 40K 80CRI DWH	**IBG 18L HVOLT**	**PRVPPS9D**	√
IBG 24000LM SEF AFL GND HVOLT OZ10 40K 80CRI DWH	**IBG 24L HVOLT**	**P2UE1ZS4**	√
IBG 12000LM SEF AFL GND MVOLT OZ10 50K 80CRI DWH	**IBG 12L MVOLT 5K**	**P7TZZ4ZV**	√
IBG 15000LM SEF AFL GND MVOLT OZ10 50K 80CRI DWH	**IBG 15L MVOLT 5K**	**PMXBGZJS**	√
IBG 18000LM SEF AFL GND MVOLT OZ10 50K 80CRI DWH	**IBG 18L MVOLT 5K**	**P85EZXU7**	√
IBG 24000LM SEF AFL GND MVOLT OZ10 50K 80CRI DWH	**IBG 24L MVOLT 5K**	**PQ5CSK48**	√
IBG 12000LM SEF AFL GND HVOLT OZ10 50K 80CRI DWH	**IBG 12L HVOLT 5K**	**PFRXRQKT**	√
IBG 15000LM SEF AFL GND HVOLT OZ10 50K 80CRI DWH	**IBG 15L HVOLT 5K**	**PV4M2BP5**	√
IBG 18000LM SEF AFL GND HVOLT OZ10 50K 80CRI DWH	**IBG 18L HVOLT 5K**	**PA36YXUT**	√
IBG 24000LM SEF AFL GND HVOLT OZ10 50K 80CRI DWH	**IBG 24L HVOLT 5K**	**P5H22E5M**	√

A+ Capable Luminaire

This item is an A+ capable luminaire, which has been designed and tested to provide consistent color appearance and out-of-the-box control compatibility with simple commissioning.

- All configurations of this luminaire meet the Acuity Brands' specification for chromatic consistency
- This luminaire is part of an A+ Certified solution for nLight® or XPoint™ Wireless control networks marked by a shaded background*

To learn more about A+, visit www.acuitybrands.com/aplus.

*See ordering tree for details

A+ Capable options indicated by this color background.

ORDERING INFORMATION

Lead times will vary depending on options selected. Consult with your sales representative.

Example: IBG 24000LM SEF AFL GND MVOLT OZ10 40K 80CRI DWH

Series	Nominal lumens				Performance package	Lens		Distribution		Voltage		Driver		Color temperature	
IBG	8000LM	8,000 lumens[2]	30000LM	30,000 lumens	SEF Standard efficiency	AFL	Acrylic, frosted	WD	Wide	MVOLT	120-277V	OZ10	0-10V dimming[2]	30K	3000 K
IBGN[1]	12000LM	12,000 lumens	36000LM	36,000 lumens	HEF Premium efficiency	ACL	Clear acrylic	GND	General	HVOLT	347-480V[3]	AZ10	0-10V dimming, aux. output[6]	35K	3500 K
	15000LM	15,000 lumens	48000LM	48,000 lumens		PCL	Clear polycarbonate	ND	Narrow	120	120V			40K	4000 K
	18000LM	18,000 lumens	60000LM	60,000 lumens		PFL	Semi-diffuse polycarbonate	FD	Focus	208	208V			50K	5000 K
	24000LM	24,000 lumens				L/LENS	Less lens			240	240V				
										277	277V				
										347	347V[4]				
										480	480V[4,5]				

Coloring rendering index		Options			Finish	
70CRI	70 CRI	HA	High ambient[7]	Controls: [21]	DNA	Natural aluminum
80CRI	80 CRI	SPD	Surge protection device[8]	HLN360 — Haleon 360° High Mount Occ Sensor, pre-wired; Bluetooth® [20]	DWH	Gloss white
90CRI	90 CRI	BPK	Fixture backpack[9]	HLN360HL — Haleon 360° High Mount Occ Sensor w/HL Default, pre-wired; Bluetooth® [20]		
		PS1050	Emergency battery pack 10W, non-CEC compliant [10]	HLN360ADC — Haleon 360° High Mount Occ Sensor w/ADC Default, pre-wired; Bluetooth® [20]		
		PS10250	Emergency battery pack 10W, non-CEC compliant [11]	HLN360ANL — Haleon 360° High Mount Occ Sensor w/ANL Default, pre-wired; Bluetooth® [20]		
		PS10250 T20C	Emergency battery pack, 10W, CEC compliant [11]	HLNASL — Haleon High Mount Aisleway Occ Sensor, pre-wired; Bluetooth® [20]		
		PS30250	Emergency battery pack, 30W, non-CEC compliant [12]	HLNASLHL — Haleon High Mount Aisleway Occ Sensor w/HL Default, pre-wired; Bluetooth® [20]		
		BGTD	Generator transfer device[13]	HLNASLADC — Haleon High Mount Aisleway Occ Sensor w/ADC Default, pre-wired; Bluetooth® [20]		
		SF	Single fuse[14]	HLNASLANL — Haleon High Mount Aisleway Occ Sensor w/ANL Default, pre-wired; Bluetooth® [20]		
		DF	Double fuse[15]	LAOZU — 360° high mount motion sensor, pre-wired [22]		
		OUTCTR	Wiring leads pulled through back center of fixture[16]	LAH0SZU — 360° high mount motion sensor with dimming, pre-wired [22]		
		OCS	RELOC® OnePass® selectable cable 6' installed [17,18]	LAPZU — 360° high mount motion sensor with photocell, pre-wired [22]		
		OCU___	RELOC® OnePass® unselectable cable 6' installed (must specify tap position)[17]	LAM0SZU — 360° high mount motion sensor, dimming & switching photocell, pre-wired [22]		
		IMP	Integrated modular plug [19]	C6D0SUEM — 360° high mount motion sensor, dimming only (photocell disabled), pre-wired; UL924 listed (not available with battery pack or BGTD) [23,24]		
		RRL_	RELOC®-Ready luminaire. (Not available with Haleon sensor options) See page 10 for ordering information	C10D0SUEM — 360° low mount motion sensor, dimming only (photocell disabled), pre-wired; UL924 listed (not available with battery pack or BGTD) [23,25]		
		WGX	Standard wire guard, installed (not available with Haleon sensor)	nPP16D — nLight® dimming & switching module [26,27]		
				nPP16DER — nLight® dimming & switching module with emergency relay (not available with battery pack or BGTD) [26,27]		
				nMSI — nLight® high mount aisleway motion sensor, pre-wired [26,28]		
				nMSI360 — nLight® 360° high mount motion sensor, pre-wired [26,29]		
				nMSID — nLight® high mount aisleway motion sensor with dimming, pre-wired [26,30]		
				nMSI360D — nLight® 360° high mount motion sensor with dimming, pre-wired [26,31]		
				MSI6XADL DSCXADL — XPoint™ Wireless 360° high mount motion sensor with photocell		
				XPW — XPoint™ Wireless 0-10V relay, external (utilizes XPA CMRB0) 55°C max ambient		
				XAD — XPoint™ Wireless 0-10V relay, internal, lower max ambient (not available with Haleon sensor) [32]		
				XPWEM — XPoint™ Wireless 0-10V relay, external (utilizes XPACMRB0EM) 55°C max ambient, meets UL924 (not available with battery pack or BGTD)		
				XAD924 — XPoint™ Wireless 0-10V relay, internal, lower max ambient, meets UL924 (not available with battery pack or BGTD) [33]		
		Cord sets:				
		CS1W	Straight plug, 120V[17]			
		CS3W	Twist-lock, 120V[17]			
		CS7W	Straight plug, 277V[17]			
		CS11W	Twist-lock, 277V[17]			
		CS25W	Twist-lock, 347V[17]			
		CS97W	Twist-lock, 480V[17]			
		CS93W	600 SO white cord, no plug (no voltage required)			
		CS93W5CD	600 SO 5-conductor white cord, no plug (no voltage required)			

See Accessories and footnotes on next page

© 2016-2018 Acuity Brands Lighting, Inc. All rights reserved.

Accessories: *Order as separate catalog number.*

Mounting:

IBAC120 M20	Aircraft cable 10' with hook (one pair)
IBAC240 M20	Aircraft cable 20' with hook (one pair)
IBHMP	Hook monopoint
HBBS36	Chain hanger with chain, 36" (one pair)
IBGACVH	Aircraft 10' V hanger (one pair)
IBGPMPHB	Pendant monopoint splice box, includes side covers (3/4" hub) for use with OUTCTR option, not available with BPK option
THUN	Tong hanger bracket (order 2 per fixture) [33]

Cord sets and sensors for IMP option:

CS1WIMP	Straight plug, 120V
CS3WIMP	Twist-lock, 120V
CS7WIMP	Straight plug, 277V
CS11WIMP	Twist-lock, 277V
CS25WIMP	Twist-lock 347V
CS93WIMP	600V SO white cord, no plug (no voltage required)
CS97WIMP	Twist-lock 480V
MSIIMPIBG	Aisle sensor for use with IMP option
MSI360IMPIBG	360° sensor for use with IMP option

Wire guards (not available with Haleon sensor):

WGIBG22	Wire guard for IBG 8000LM; gloss white
WGIBG24	Wire guard for IBG 12000/15000LM; gloss white
WGIBG26	Wire guard for IBG 18000/24000/30000LM; gloss white
WGIBG42	Wire guard for all IBGN lumen packages; gloss white
WGIBG46	Wire guard for IBG 36000/48000/60000LM; gloss white
WGIBG22DNA	Wire guard for IBG 8000LM; natural aluminum
WGIBG24DNA	Wire guard for IBG 12000/15000LM; natural aluminum
WGIBG26DNA	Wire guard for IBG 18000/24000/30000LM; natural aluminum
WGIBG42DNA	Wire guard for all IBGN lumen packages; natural aluminum
WGIBG46DNA	Wire guard for IBG 36000/48000/60000LM; natural aluminum

Notes

1 Available with 18000LM, 24000LM, 30000LM and 36000LM only.
2 Not available with Haleon sensor controls options.
3 Not available with 8000LM. Not available with BTGD, nPP16D, nPP16DER, PS1050, PS10250, PS30250, or XAD.
4 When ordered with 8000LM or Xpoint controls voltage selected utilizes the fixture back pack.
5 Not available with nPP16D or nPP16DER.
6 Only available with Haleon sensor controls options.
7 55 C when suspended, 45 C when surface mounted. Not available with BGTD, PS1050, PS10250, PS30250 or XAD.
8 Standard with HVOLT, 347, or 480V - only specify for MVOLT, 120, 208, 240, or 277V. Standard with Motion sensors/controls, BGTD & Power Sentry battery options.
9 Required with PS1050, PS10250, PS30250, BGTD. Required with 8000LM when ordered with 347/480V. Required with Xpoint controls when ordered with 347/480V. Not available with nLight. Not for use with THUN mount (surface).
10 Requires BPK option. Available 120-277V only. Available with 8000LM only. For ambient temperatures of 32°F to 122°F (0°C to 50°C). Not available with IMP. See spec sheet PS1050 for more information.
11 Requires BPK option. Available 120-277V only. Not available with 8000LM. For ambient temperatures of 50°F to 122°F (10°C to 50°C).Not available with IMP. Only available for factory installation. See spec sheet PS10250 for more information.
12 Requires BPK option. 120 or 277V only. Not available with 8000LM. For ambient temperatures of 32°F to 122°F (0°C to 50°C). Not available with IMP. See spec sheet PS30250 for more information.
13 Requires BPK option. 120 or 277V only. Not available with PS1050, PS10250, PS30250 or HA. Not available with 347 or 480V when ordered in combination with XAD or XPW. For ambient temperatures up to 104°F (40°C).
14 Available on 120, 277, 347V. Not available with MVOLT or HVOLT.
15 Available on 208, 240, 480V and Haleon sensors. Not available with MVOLT or HVOLT.
16 Not available with BPK option. Requires IBGPMPHB accessory to mount fixture. Not available with Cord Set options.
17 Must specify voltage.
18 Cannot be used in dimming applications, must use RRLC12S
19 Not available with BPK, nPP16D, nPP16DER, nMSI, nMSI360, PS1050, PS10250, or PS30250.
20 If 347V or 480V a stepdown transformer will be utilized and BPK option required. RRL option not available. Not available with OUTCTR.
21 Must specify voltage. Refer to page 7 for Haleon sensor default settings matrix. Refer to page 9 for additional LSXR ordering options. Refer to page 10 for additional C6D0SUEM and C10D0SUEM information.
22 This sensor configuration is suitable for minimum ambient temperature of 14°F (-10°C). See page 9 for low temperature option providing -4°F (-20°C) minimum ambient temperature.
23 Daylight harvesting functionality not enabled by default. See page 10 for default sequence of operation.
24 Utilizes XPA CMRB6.
25 Utilizes XPA CMRB10.
26 Not available with 208V, 240V, or 480V.
27 347V and 480V utilize a step down transformer.
28 nMSI options utilizes a nPP16 and nCMB 50 sensor, CAT5e connector cable also included.
29 nMSI360 options utilizes a nPP16 and nCMB 6 sensor, CAT5e connector cable also included.
30 nMSID options utilizes a nPP16D and nCMB 50 sensor CAT5e connector cable also included.
31 nMSI360D options utilizes a nPP16D and nCMB 6 sensor, CAT5e connector cable also included.
32 Not available with HVOLT. When ordered with 347V or 480V, BPK option is required. Not available with HA option.
33 Maximum ambient temperature of standard fixture mounted with THUN is 95°F (35°C). With HA option 113°F (45°C). Not available with MSIIMPIBG or MSI360IMPIBG options.

POWER SENTRY EMERGENCY BATTERY PACKS

PS1050:	http://www.acuitybrands.com/products/detail/369448/Power-Sentry/PS1050/Reduced-Profile-LED-Emergency-Battery-Pack/-/media/products/Power_Sentry/369448/document/PS1050_pdf.pdf
PS10250:	http://www.acuitybrands.com/products/detail/604737/Power-Sentry/PS10250/Emergency-LED-Battery-Backup/-/media/products/Power_Sentry/604737/document/PS10250_pdf.pdf
PS30250:	http://www.acuitybrands.com/products/detail/604739/Power-Sentry/PS30250/Emergency-LED-Battery-Backup/-/media/products/Power_Sentry/604739/document/PS30250_pdf.pdf

EMERGENCY LUMENS (5000K 70CRI)

Fixture	IBG			IBGN
Lumen package	8000LM (PS1050 only)	12000LM - 15000LM	18000LM - 60000LM	18000LM - 36000LM
PS1050/PS10250	1600	1300	1900	1200
PS30250	N/A	4000	2400	3800

Note: For emergency lumen output of specific model, please consult factory.

© 2016-2018 Acuity Brands Lighting, Inc. All rights reserved.

DIMENSIONS

All dimensions are in inches (centimeters) unless otherwise indicated.
Dimensions may vary with options or accessories.

Weight: (may vary with options or accessories)
8L: 7.75 lbs (3.515Kg)
12L/15L: 10.5 lbs (4.762Kg)
18L/24L/30L: 15.9 lbs (7.212Kg)
18L/24L/30L/36L: 4' Narrow - 16.25 lbs (7.370Kg)
36L/48L/60L: 4' - 6' Mod - 21.75 lbs (9.865Kg)

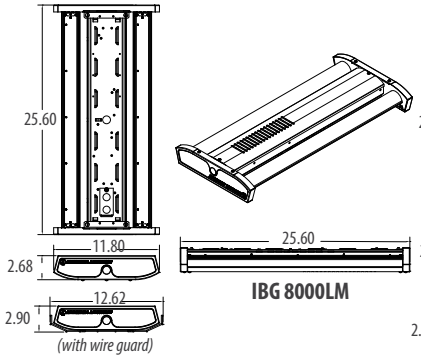

IBG 8000LM

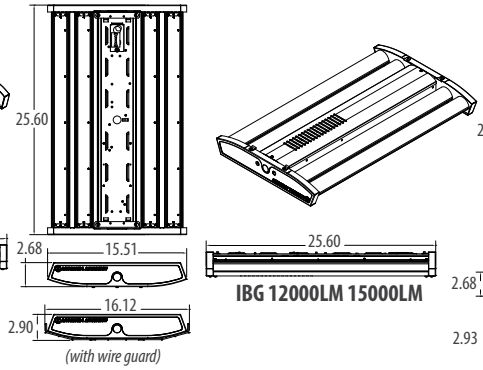

IBG 12000LM 15000LM

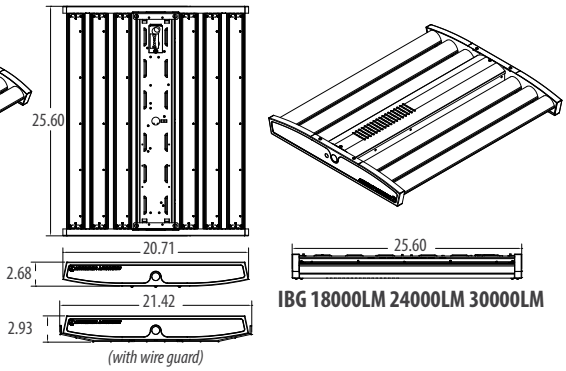

IBG 18000LM 24000LM 30000LM

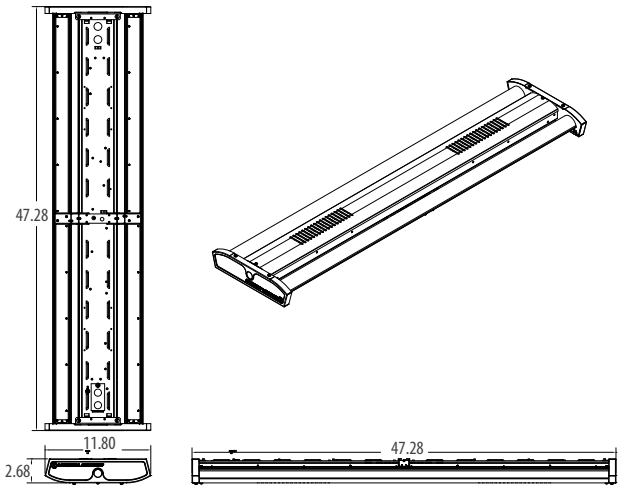

IBGN 18000LM

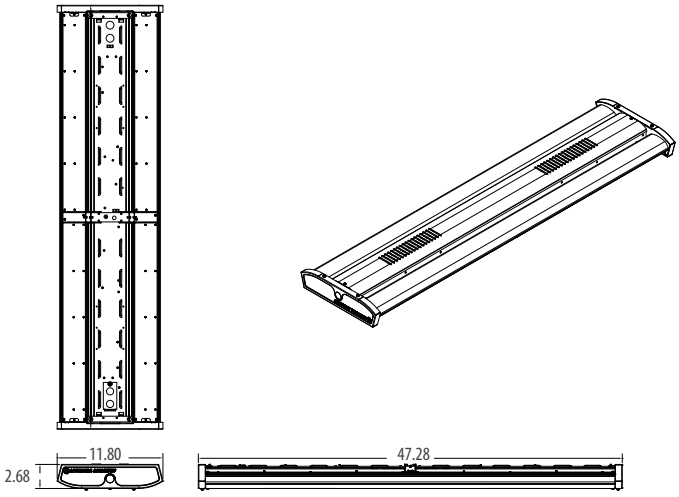

IBGN 24000LM 30000LM 36000LM

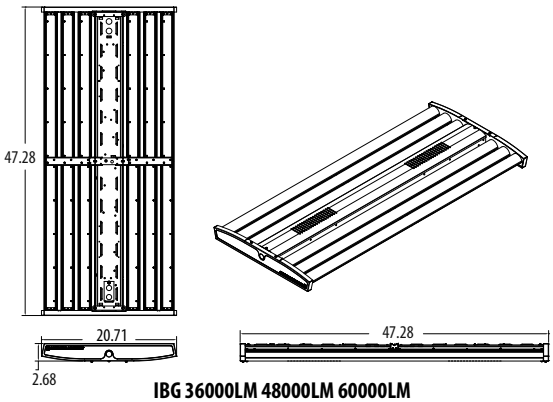

IBG 36000LM 48000LM 60000LM

BPK OPTION

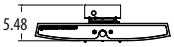

PS30250 OPTION

© 2016-2018 Acuity Brands Lighting, Inc. All rights reserved.

IBG OPERATIONAL DATA

	Lumen package	Efficiency level	Lens/distribution			
			Acrylic frosted/ general	Clear acrylic/narrow	Clear acrylic/wide	Clear acrylic/focus
Delivered lumens 4000K, 80CRI	8000LM	SEF	7594	7145	7384	7364
		HEF	7842	7378	7625	7604
	12000LM	SEF	11580	10895	11260	11228
		HEF	11746	11051	11421	11390
	15000LM	SEF	14458	13603	14059	14019
		HEF	14824	13947	14415	14374
	18000LM	SEF	17329	16303	16850	16803
		HEF	17752	16702	17262	17214
	24000LM	SEF	23000	21639	22365	22303
		HEF	23612	22215	22960	22896
	30000LM	SEF	27344	25727	26589	26515
		HEF	29577	27827	28760	28680
	36000LM	SEF	33203	31239	34547	32197
		HEF	35528	33426	34547	34450
	48000LM	SEF	45973	43253	44704	44579
		HEF	47254	44458	45949	45821
	60000LM	SEF	55453	52172	53922	53771
		HEF	57027	53653	55452	55298
Delivered lumens 5000K, 80CRI	8000LM	SEF	7873	7408	7656	7635
		HEF	8082	7604	7859	7837
	12000LM	SEF	12006	11296	11674	11642
		HEF	12106	11390	11771	11739
	15000LM	SEF	14990	14103	14576	14536
		HEF	15278	14374	14856	14815
	18000LM	SEF	17966	16904	17470	17422
		HEF	18296	17214	17791	17741
	24000LM	SEF	23847	22436	23188	23123
		HEF	24366	22896	23664	23598
	30000LM	SEF	28351	26674	27568	27491
		HEF	30483	28680	29641	29559
	36000LM	SEF	34221	32196	35605	33183
		HEF	36616	34450	35605	35506
	48000LM	SEF	47665	44845	46349	46220
		HEF	48702	45820	47357	47225
	60000LM	SEF	57494	54093	55906	55751
		HEF	58774	55297	57151	56992

PHOTOMETRICS

See www.lithonia.com.

© 2016-2018 Acuity Brands Lighting, Inc. All rights reserved.

IBG CHARACTERISTICS

Lumen package	Wattage								Length	Width	Depth	Comparable Light Source
	Standard efficiency				High efficiency							
	120V	277V	347V	480V	120V	277V	347V	480V	Dimensions are shown in inches (centimeters) unless otherwise noted.			
8000LM	55	54	58	61	50	49	51	54	25.6	11.75	2.75	100W MH, 4-lamp T8 NBF
12000LM	79	77	77	76	70	69	68	67	25.6	15.52	2.75	175W MH, 4-lamp T8 HBF, 2-lamp T5HO
15000LM	97	95	97	96	87	86	86	86	25.6	15.52	2.75	200W MH, 6-lamp T8 NBF
18000LM	114	112	114	115	102	100	102	103	25.6	20.65	2.75	250W MH, 6-lamp T8 HBF, 4-lamp T5HO
24000LM	154	150	150	150	136	133	135	135	25.6	20.65	2.75	400W MH, 6-lamp T5HO
30000LM	193	186	188	188	176	171	173	173	25.6	20.65	2.75	575W MH, 10-lamp T8 HBF
36000LM	225	221	227	229	200	197	203	206	47.29	20.65	2.75	750W MH, 8-lamp T5HO
48000LM	301	293	301	302	267	261	269	270	47.29	20.65	2.75	875W MH, 10-lamp T5HO
60000LM	385	374	378	377	332	323	330	330	47.29	20.65	2.75	1000W MH

IBGN OPERATIONAL DATA

	Lumen package	Efficiency level	Lens/distribution			
			Acrylic frosted/ general	Clear acrylic/narrow	Clear acrylic/wide	Clear acrylic/focus
Delivered lumens 4000K, 80CRI	18000LM	SEF	17036	16028	16566	16520
		HEF	17776	16724	17285	17237
	24000LM	SEF	22727	21383	22100	22038
		HEF	24123	22696	23457	23392
	30000LM	SEF	28642	26948	27851	27773
		HEF	29493	27748	28679	28599
	36000LM	SEF	34336	32305	33388	33295
		HEF	34912	32846	33948	33853
Delivered lumens 5000K, 80CRI	18000LM	SEF	17663	16618	17175	17128
		HEF	18320	17237	17814	17765
	24000LM	SEF	23564	22170	22913	22849
		HEF	24862	23391	24176	24108
	30000LM	SEF	29696	27940	28876	28796
		HEF	30397	28599	29558	29475
	36000LM	SEF	35600	33494	34617	34520
		HEF	35982	33853	34988	34890

IBGN CHARACTERISTICS

Lumen package	Wattage								Length	Width	Depth
	Standard efficiency				High efficiency						
	120V	277V	347V	480V	120V	277V	347V	480V	Dimensions are shown in inches (centimeters) unless otherwise noted.		
18000LM	117	114	115	114	104	102	101	101	47.29	11.75	2.75
24000LM	172	170	167	167	152	150	153	153	47.29	11.75	2.75
30000LM	209	205	208	207	183	180	179	178	47.29	11.75	2.75
36000LM	246	240	242	243	207	203	202	201	47.29	11.75	2.75

© 2016-2018 Acuity Brands Lighting, Inc. All rights reserved.

PROJECTED LUMEN MAINTENANCE

IBG 2ft & 4ft						
Operating hours	0	15,000	30,000	45,000	60,000	100,000
Lumen maintenance factor	1	0.97	0.95	0.93	0.91	0.86
IBGN						
Operating hours	0	15,000	30,000	45,000	60,000	100,000
Lumen maintenance factor	1	0.97	0.93	0.90	0.87	0.81

AMBIENT TEMPERATURE RATINGS

Mounting	Suspended	Surface
Standard temperature rating	113°F (45°C)	95°F (35°C)
HA option temperature rating	131°F (55°C)	113°F (45°C)

LUMENS VS. AMBIENT TEMPERATURE

Ambient °C	Ambient °F	Lumen Multiplier
0	32	1.04
5	41	1.03
10	50	1.02
20	68	1.01
25	77	1.00
30	86	0.99
35	95	0.99
40	104	0.98
45	113	0.97
50	122	0.96
55	131	0.96

HALEON - Integrated Occupancy Sensor with Bluetooth® Programmability

- Programmable sensor settings over Bluetooth® with Acuity VLP smartphone app.
- Default programming options to service various application spaces - occupancy detection, 0-10V dimming and daylight harvesting.
- 360° High Mount and High Mount Aiselway lens detection options for mounting heights up to 40 ft.
- Integrated retractable lens mask included to block unwanted detection.
- Sensor ambient temperature rating of -40°F (-40°C) to 158°F (70°C).

Bluetooth®

Haleon Default Programming

Model	Default Operation	LSXR Equivalent	Occupancy Time Delay	Photocell Mode	Photocell Set-point	Low Trim	High Trim	Dim to Off Time Delay
HLNxxx	On/Off Occupancy Only	LSXR 6 LT or LA00STU	10 minutes	Disabled	n/a	n/a	100%	Disabled
HLNxxxHL	Occupancy w/ 0-10V Dimming (High/Low/Off)	LSXR 6 HL LT or LAH0STU	10 minutes	Disabled	n/a	10%	100%	2.5 minutes
HLNxxxADC	Occupancy w/ Dim & Switch Photocell	LSXR 6 ADC LT or LAM0STU	10 minutes	On/Off & Auto Dim	4 fc	10%	100%	0 seconds
HLNxxxANL	Dim & Switch Photocell with High/Low Occupancy Operation	LSXR 6 ANL LT or LAG0STU	10 minutes	On/Off & Auto Dim	4 fc	10%	100%	Stay Dim/ Never Off

Note: Lens detection noted in place of 'xxx'

© 2016-2018 Acuity Brands Lighting, Inc. All rights reserved.

HALEON COVERAGE PATTERNS

HIGH MOUNT 360°

- Optimized full coverage pattern for 10 – 40 ft. (3.1 – 12 m)
- Reliable detection of large motion (e.g. pedestrian walking traffic) up to 30 ft. (9.1 m) mounting height
- Reliable detection of extra-large motion (e.g. forklift traffic) up to 40 ft. (12 m) mounting height
- Stow-able rotating lens shield can be utilized to mask areas in which detection is not desired

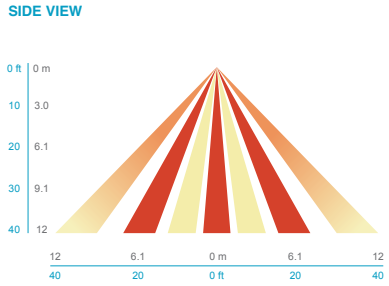

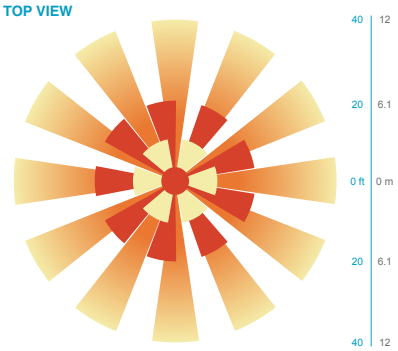

HIGH MOUNT AISLEWAY

- Optimized bi directional coverage pattern for aisleways with 10 – 40 ft. (3.1 – 12 m) mounting heights
- 1.2X's mounting height equals approximate detection range
- Reliable detection of large motion (e.g. pedestrian walking traffic) up to 30 ft. (9.1 m) mounting height
- Reliable detection of extra-large motion (e.g. forklift traffic) up to 40 ft. (12 m) mounting height
- Stow-able rotating lens shield can be utilized to mask areas in which detection is not desired

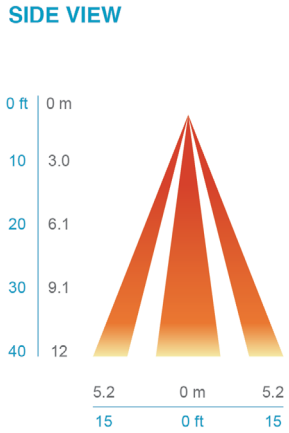

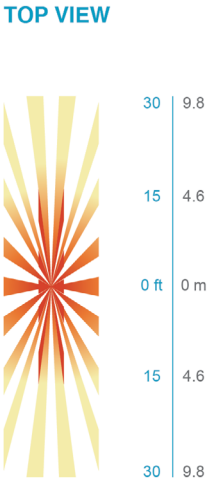

© 2016-2018 Acuity Brands Lighting, Inc. All rights reserved.

LSXR – Fixture Mount Occupancy Sensor (see www.AcuityControls.com for additional information)

- Three interchangeable lens options to satisfy multiple mounting heights and coverage pattern requirements.
- Integrated mounting bracket drops lens down 3" from chase nipple.
- Single or dual relay versions — designed with robust protection from the harsh switching requirements of T5 and LED loads.
- Photocell and 0-10VDC dimming options.
- No PIR field calibration or sensitivity adjustments required.
- Sensor ambient temperature rating of 14°F (-10°C) to 131°F (55°C).

LSXR configuration	Comparable CMRB sensor	Old style sensor nomenclature
For shortest lead times use one of the following LSXR configurations		
LC0ZU	CMRB 50	MSI
LCH0SZU	CMRB 50 D	MSID
LCPZU	CMRB 50 P	MSIPED
LA0ZU	CMRB 6	MSI360
LAH0SZU	CMRB 6 D	MSI360D
LAPZU	CMRB 6 P	MSI360PED

SELECTIONS BELOW WILL EXTEND ORDER LEAD TIME. CONSULT YOUR SALES REPRESENTATIVE FOR DETAILS.

SINGLE RELAY

ORDERING INFORMATION

Example: LAH0SZU

Series	Lens option	Dimming/Photocell	Max. dim level	Min. dim level	Temp/Humidity	Default occupancy time delay
L LSXR passive infrared indoor occupancy sensor	A High mount, 360° B Low mount, 360° C High mount aisleway	0 None[1] H High/low occupancy operation P Switching photocell (on/off)[1] M Dimming and switching photocell G Dimming and switching photocell with high/low occupancy operation	0 10 VDC 9 9 VDC 8 8 VDC 7 7 VDC	S Minimum dim level of ballast 1 1 VDC 2 2 VDC 3 3 VDC 4 4 VDC 5 5 VDC 6 6 VDC	Z None T Low temperature[2]	I 30 sec D 2.5 min X 5.0 min R 7.5 min U 10.0 min (with minimum 15 minute on time) V 15.0 min W 20.0 min Y 30.0 min

Notes

1 Max and min dim levels not applicable with this option.

2 Ambient temperature rating of -4°F (-20°C) to 131°F (55°C).

DUAL RELAY (Available with 120, 277, and 347V only)

ORDERING INFORMATION

Example: LA2KZU

Series	Lens option	Poles	Operating mode	Temp/Humidity	Default occupancy time delay
L LSXR passive infrared indoor occupancy sensor	A High mount, 360° B Low mount, 360° C High mount aisleway	2 Dual relay	J None K Alternating off relays (promotes even lamp wear) O Alternating off relays w/photocell P Switching photocell(on/off) E Photocell on/off (pole 1 only) F Photocell on/off - both poles (dual set-point)	Z None T Low temperature[1]	I 30 sec D 2.5 min X 5.0 min R 7.5 min U 10.0 min (with minimum 15 minute on time) V 15.0 min W 20.0 min Y 30.0 min

Notes

1 Ambient temperature rating of -4°F (-20°C) to 131°F (55°C).

Example: LENS 50 J100

Replacement lenses: *Order as separate catalog number.*

Series	Lens type	Package quantity
LENS	6 High mount 360° 10 Low mount 360° 50 High mount aisleway	[blank] Single Lens J10 10-pack J100 100-pack

© 2016-2018 Acuity Brands Lighting, Inc. All rights reserved.

LSXR COVERAGE PATTERNS

HIGH MOUNT 360º LENS (#6)

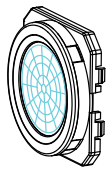

- Best choice for 15 to 45 ft (4.57 to 13.72 m) mounting heights
- 15 to 20 ft (4.57 to 6.10 m) radial coverage overlaps area lit by a typical high bay fixture
- Excellent detection of large motion (e.g. walking) up to a 35 ft (10.76 m) mounting height
- Excellent detection of extra large motion (e.g. forklifts) up to a 45 ft (13.72 m) mounting height

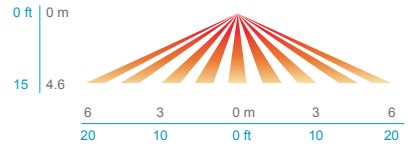

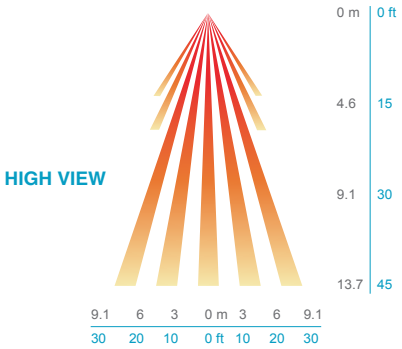

HIGH MOUNT AISLEWAY LENS (#50)

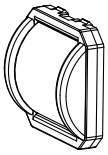

- Provides a bi-directional coverage pattern ideal for warehouse racking
- 1.2x mounting height equals approximate detection range in either direction
- Typical 40 ft (12.19 m) mounting detects 50 ft (15.24 m) in either direction
- Superior aisleway coverage compared to a masked 360º lens

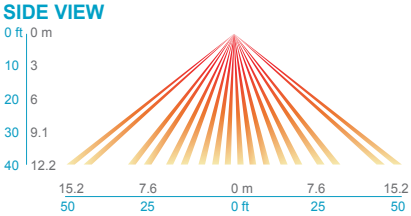

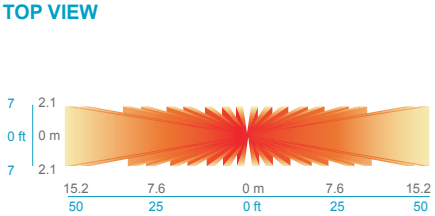

LOW MOUNT 360º LENS (#10)

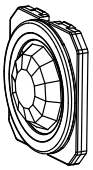

- Best choice for large motion detection (e.g. walking)
- 360º conical shaped pattern
- Provides ~24 ft (7.32 m) radial coverage (~2000 ft2) when mounted at 9 ft (2.74 m)
- 7 to 15 ft (2.13 to 4.57 m) mounting heights provide 16 to 36 ft (4.88 to 10.97 m) radial coverage
- Detection range improves when walking across beams compared to into beams

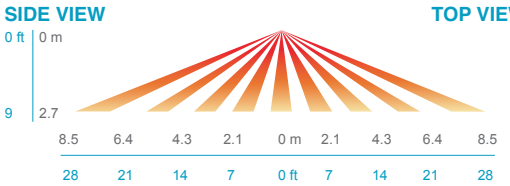

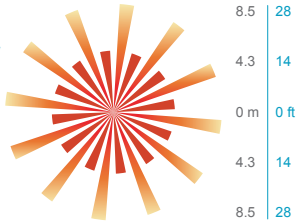

C6D0SUEM & C10D0SUEM - UL924 Listed Sensors

SENSOR DEFAULT SEQUENCE OF OPERATION

- The occupied light level is full output.
- The unoccupied light level is approximately 30%.
- The time delay following sensor vacancy is 5 minutes, with an additional 5 minute slow ramp from the occupied light level to the unoccupied light level.
- **The onboard daylight sensor is not enabled by default - sensor will not respond to changing daylight conditions.**

Daylight sensor settings can be enabled and programmed by a trained technician after installation.

EGRESS MODE SEQUENCE OF OPERATION

The UL924 C6D0SUEM & C10D0SUEM controls are designed to provide fully tuned light output for 90 minutes following power loss or interruption, ignoring automatic dimming/occupancy/daylight control signals during this time.

- Typical sequence upon power loss: Backup power source activates, transfer switch moves the emergency circuit powering the sensor onto the backup source, and sensor regains power. This sensor is programmed to detect any power interruption or transfer > 30 ms
- The sensor then ignores occupancy & daylight status and controls the luminaire to full light output for 90 minutes.
- The device resumes normal dimming & occupancy controls after 90 minutes.
- This sensor should not be used with online power backup systems or any transfer devices with < 30 ms transfer time.

© 2016-2018 Acuity Brands Lighting, Inc. All rights reserved.

IMP - Integrated Modular Plug

- The integrated modular plug (IMP) option allows the installer to plug and play a multitude of accessories.
- Cord sets connect quickly to any fixture with IMP option.
- IMP accessories include occupancy sensors, photocells, X-point relays.

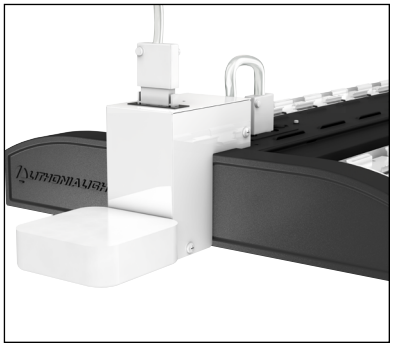

IMP compatible cord sets[1]	
CS1WIMP	Straight plug, 120V
CS3WIMP	Twist-lock, 120V
CS7WIMP	Straight plug, 277V
CS11WIMP	Twist-lock, 277V
CS25WIMP	Twist-lock, 347V
CS93WIMP	600V SEOOW white cord, no plug
CS97WIMP	Twist-lock, 480V

IMP compatible sensors	
MSIIMP	Aisle sensor
MSI360IMP	360° sensor

Notes

1 Cord set required for fixture operation. All cord sets are 18/3, 6' white.

RRL - RELOC®-Ready Luminaire

- RRL connectors can be used with Quick-Flex®, System 820 and OnePass® systems.
- Load side of connector factory installed to luminaire.
- 4-pole mating connector with push-in terminations allows for simple installation.
- Touch-safe design on both halves meets UL/CSA requirement.
- Wiping contact design allows safe disconnect under load.

ORDERING INFORMATION Lead times will vary depending on options selected. Consult with your sales representative.

Example: RRLA

Series		Wiring instructions			
RRL	RELOC®-ready luminaire	A	Hot conductor wired to position #1 (phase A); non-dimming	AE	Hot conductor wired to position #1 (phase A), hot conductor #2 wired to position #2 (phase B); non-dimming [2]
		B	Hot conductor wired to position #2 (phase B); non-dimming	ABE	Hot conductor wired to position #1 (phase A), hot conductor #2 wired to position #2 (phase B), inverter conductor wired to position #3 (phase C); non-dimming [1,2]
		C	Hot conductor wired to position #3 (phase C); non-dimming [1]	C12S	Hot conductor in position #1 (phase A), low voltage conductor #1 in position #2,low voltage conductor #2 in position #3; dimming [1,3]
		AB	Outboard hot conductor wired to position #1 (phase A), inboard hot conductor wired to position #2 (phase B); non-dimming		

Compatible RELOC® Cables for Industrial Luminaires (ordered and shipped separately)

(click to view RELOC product page for more information)

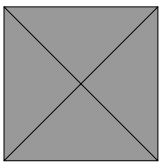

OCS

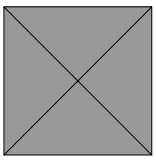

OCU

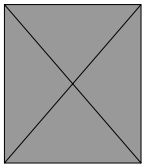

OD

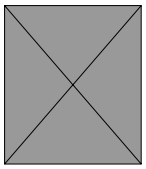

DC

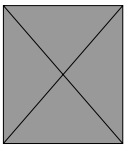

PT

Notes

1 C, ABE, and C12S options are not used with Quick-Flex QFC, QSFC, QPT, and QD.

2 AE and ABE commercial fixtures should disconnect the TSPL before unplugging the RRL so it does not go into discharge mode.

3 C12S option is used with the OnePass OD and 820 SSC, PT, and DC for 0-10V/DALI applications.

© 2016-2018 Acuity Brands Lighting, Inc. All rights reserved.

HLF2
High Lumen LED Flood Luminaire

Catalog Number

Notes

Type

Hit the Tab key or mouse over the page to see all interactive elements.

Specifications

EPA:	5.4 ft² (0.50 m²)
Depth:	10″ (25.4 cm)
Width:	25″ (62.5 cm)
Height:	22″ (55.8 cm)
Overall Height:	31″ (78.4 cm)
Weight:	70 lbs (31.75 kg)

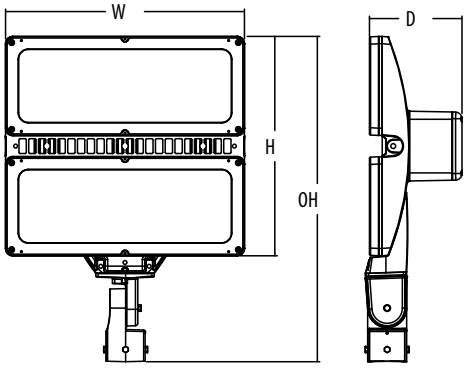

A+ Capable Luminaire

This item is an A+ capable luminaire, which has been designed and tested to provide consistent color appearance and system-level interoperability.

- All configurations of this luminaire meet the Acuity Brands' specification for chromatic consistency
- This luminaire is A+ Certified when ordered with DTL® controls marked by a shaded background. DTL DLL equipped luminaires meet the A+ specification for luminaire to photocontrol interoperability1
- This luminaire is part of an A+ Certified solution for ROAM® or XPoint™ Wireless control networks, providing out-of-the-box control compatibility with simple commissioning, when ordered with drivers and control options marked by a shaded background[1]

To learn more about A+, visit www.acuitybrands.com/aplus.

1. See ordering tree for details.
2. A+ Certified Solutions for ROAM require the order of one ROAM node per luminaire. Sold Separately: Link to Roam; Link to DTL DLL

A+ Capable options indicated by this color background.

Ordering Information

EXAMPLE: HLF2 LED P1 40K WFL MVOLT IS DDBXD

HLF2 LED

Series	Performance package	Color temperature	Distribution	Voltage	Mounting	Options	Finish *(required)*
HLF2 LED	P1 P2 P3	30K 3000 K 40K 4000 K 50K 5000 K	VNSP Very narrow spot (7°)[1] NSP Narrow spot (15°) SP Spot (22°) NFL Narrow flood (45°) MNFL Medium narrow flood (70°) MFL Medium flood (6x6) WFL Wide flood (6x7)	MVOLT [2] 120 [3] 208 [3] 240 [3] 277 [3] 347 [3] 480 [3]	**Shipped included** IS Integral slipfitter (fits 2-7/8″ O.D. tenon) YKC62 Yoke with 16-3 SO cord	**Shipped installed** PER NEMA twist-lock receptacle only (controls ordered separate)[4,5] PER5 Five-wire receptacle only (controls ordered separate)[4,5] PER7 Seven-wire receptacle only (controls ordered separate)[4,5] SF Single fuse (120, 277, 347V) [3] DF Double fuse (208, 240, 480V) [3] CFB Black faceplate DMG 0-10 dimming driver (controls ordered separate) **Shipped separately** [6] UBV Upper/bottom visor (universal) FV Full visor WG Wire guard VG Vandal guard (polycarbonate)	DDBXD Dark bronze DBLXD Black DNAXD Natural aluminum DWHXD White

© 2014-2017 Acuity Brands Lighting, Inc. All rights reserved.

Ordering Information

Accessories

Ordered and shipped separately.

FTS CG6 DDBXD U	Slipfitter for 2-3/8" to 2-7/8" OD tenons; mates with yoke mount (specify finish)
DSHORT SBK U	Shorting cap [7]
DLL127F 1.5 JU	Photocell - SSL twist-lock (120-277V) [7]
DLL347F 1.5 CUL JU	Photocell - SSL twist-lock (347V) [7]
DLL480F 1.5 CUL JU	Photocell - SSL twist-lock (480V) [7]

For more mounting options, visit our Floodlighting Accessories pages.

For more control options, visit DTL and ROAM online.

NOTES

1. VNSP includes an external reflector that ships separately. For installation instructions, refer to the instruction sheet provided with the reflector. VNSP is limited to aiming from 0-90° only. VNSP is not available for use with options CFB, UVB, FV, WG or VG.
2. MVOLT driver operates on any line voltage from 120-277V.
3. Single fuse (SF) requires 120, 277 or 347 voltage option. Double fuse (DF) requires 208, 240 or 480 voltage option.
4. Specifies a ROAM® enabled luminaire with 0-10V dimming capability. Additional hardware and services required for ROAM® deployment; must be purchased separately. Call 1-800-442-6745 or email: sales@roamservices.net.
5. For units with a photocontrol receptacle, the mounting must be restricted to ± 45° from horizontal aim per ANSI C136.10-2010.
6. Must be ordered with luminaire. Requires in-field assembly.
7. Requires luminaire to be specified with PER, PER5 or PER7 option. Ordered and shipped as a separate line item.

Performance Data

Lumen Output

Lumen values are from photometric tests performed in accordance with IESNA LM-79-08. Data is considered to be representative of the configurations shown, within the tolerances allowed by Lighting Facts. Contact factory for performance data on any configurations not shown here.

Performance Package	System Watts	Dist. Type	Field Angle		Beam Angle		30K (3000 K, 70 CRI)			40K (4000 K, 70 CRI)			50K (5000 K, 70 CRI)		
			°H	°V	°H	°V	Max Cd	Lumens	LPW	Max Cd	Lumens	LPW	Max Cd	Lumens	LPW
P1	328W	VNSP	30	30	11	10	434,853	31,127	95	450,297	32,233	98	456,410	32,670	100
		NSP	50	49	26	25	127,616	36,042	110	132,149	37,322	114	133,943	37,829	115
		SP	52	50	31	30	119,648	37,432	114	123,897	38,762	118	125,579	39,288	120
		NFL	76	75	49	48	55,292	37,531	114	57,256	38,864	118	58,033	39,391	120
		MNFL	92	91	68	67	31,938	37,411	114	33,521	39,266	120	33,521	39,266	120
		MFL	101	114	84	103	18,401	37,904	116	19,055	39,250	120	14,772	39,783	121
		WFL	124	133	107	113	14,073	37,576	115	14,226	38,911	119	17,277	39,439	120
P2	487W	VNSP	30	30	11	10	596,587	42,704	88	617,776	44,221	91	626,163	44,822	92
		NSP	50	49	26	25	175,081	49,447	102	181,299	51,203	105	183,760	51,899	107
		SP	52	51	31	30	164,148	51,355	105	169,978	53,179	109	172,286	53,901	111
		NFL	76	75	49	48	75,857	51,489	106	78,551	53,318	109	79,617	54,042	111
		MNFL	92	91	68	67	43,817	51,326	105	45,373	53,149	109	45,989	53,870	111
		MFL	101	114	84	103	25,250	52,000	107	26,139	53,847	111	20,269	54,578	112
		WFL	124	133	107	113	19,310	51,550	106	19,990	53,381	110	23,707	54,106	111
P3	598W	VNSP	28	28	10	9	787,413	49,438	83	837,947	52,610	88	841,908	52,859	88
		NSP	45	45	23	23	239,669	56,590	95	255,050	60,222	101	256,256	60,507	101
		SP	49	48	29	29	209,101	58,502	98	222,520	62,257	104	223,572	62,551	105
		NFL	72	71	46	45	94,977	58,019	97	101,072	61,742	103	101,550	62,034	104
		MNFL	87	85	64	63	56,393	57,755	97	60,012	61,461	103	60,296	61,752	103
		MFL	100	113	82	102	24,570	60,373	101	31,332	64,248	107	20,090	64,552	108
		WFL	123	132	107	114	18,790	59,775	100	23,566	63,611	106	23,496	63,912	107

Lumen Ambient Temperature (LAT) Multipliers

Use these factors to determine relative lumen output for average ambient temperatures from 0-40°C (32-104°F).

Ambient		Lumen Multiplier
0°C	32°F	1.05
10°C	50°F	1.04
20°C	68°F	1.01
25°C	**77°F**	**1**
30°C	86°F	0.98
40°C	104°F	0.94

Projected LED Lumen Maintenance

Operating Hours	0	25,000	50,000	100,000
Lumen Maintenance Factor	HLF2 LED P1			
	1	0.98	0.96	0.93
	HLF2 LED P2			
	1	0.98	0.96	0.93
	HLF2 LED P3			
	1	0.93	0.89	0.83

Electrical Load

		Current (A)					
Power Package	System Watts	120V	208V	240V	277V	347V	480V
P1	328W	2.8	1.6	1.4	1.2	1.0	0.8
P2	487W	4.1	2.3	2.0	1.8	1.4	1.1
P3	598W	5.0	2.8	2.4	2.1	1.7	1.3

PER Table

Control	PER (3 wire)	PER5 (5 wire)		PER7 (7 wire)		
			Wire 4/Wire5		Wire 4/Wire5	Wire 6/Wire7
Photocontrol Only (On/Off)	✔	⚠	Wired to dimming leads on driver	⚠	Wired to dimming leads on driver	Wires Capped inside fixture
ROAM	⊘	✔	Wired to dimming leads on driver	⚠	Wired to dimming leads on driver	Wires Capped inside fixture
ROAM with Motion (ROAM on/off only)	⊘	⚠	Wires Capped inside fixture	⚠	Wires Capped inside fixture	Wires Capped inside fixture
Future-proof*	⊘	⚠	Wired to dimming leads on driver	✔	Wired to dimming leads on driver	Wires Capped inside fixture
Future-proof* with Motion	⊘	⚠	Wires Capped inside fixture	✔	Wires Capped inside fixture	Wires Capped inside fixture

✔ Recommended
⊘ Will not work
⚠ Alternate

*Future-proof means: Ability to change controls in the future.

© 2014-2017 Acuity Brands Lighting, Inc. All rights reserved.

Mounting, Options and Accessories

IS - Integral slipfitter (fits 2-7/8" O.D. tenon)

YKC62 Yoke with 16-3 SO cord

UBV Upper/Bottom visor (universal)

FV Full visor

VG Vandal guard

WG Wire guard

CFB Black faceplate

Optics

Depending on the distribution chosen, luminaires are built using internal and external reflectors or hybrid silicone optical technology.

Internal reflectors MFL, WFL

Hybrid silicone optics NSP, SP, NFL, MNFL

Internal and external reflectors VNSP

Photometric Diagrams

To see complete photometric reports or download .ies files for this product, visit Lithonia Lighting's HLF Size 2 homepage.

Isofootcandle plots for the HLF2 LED P3 40K. Distances are in units of mount height (20ft).

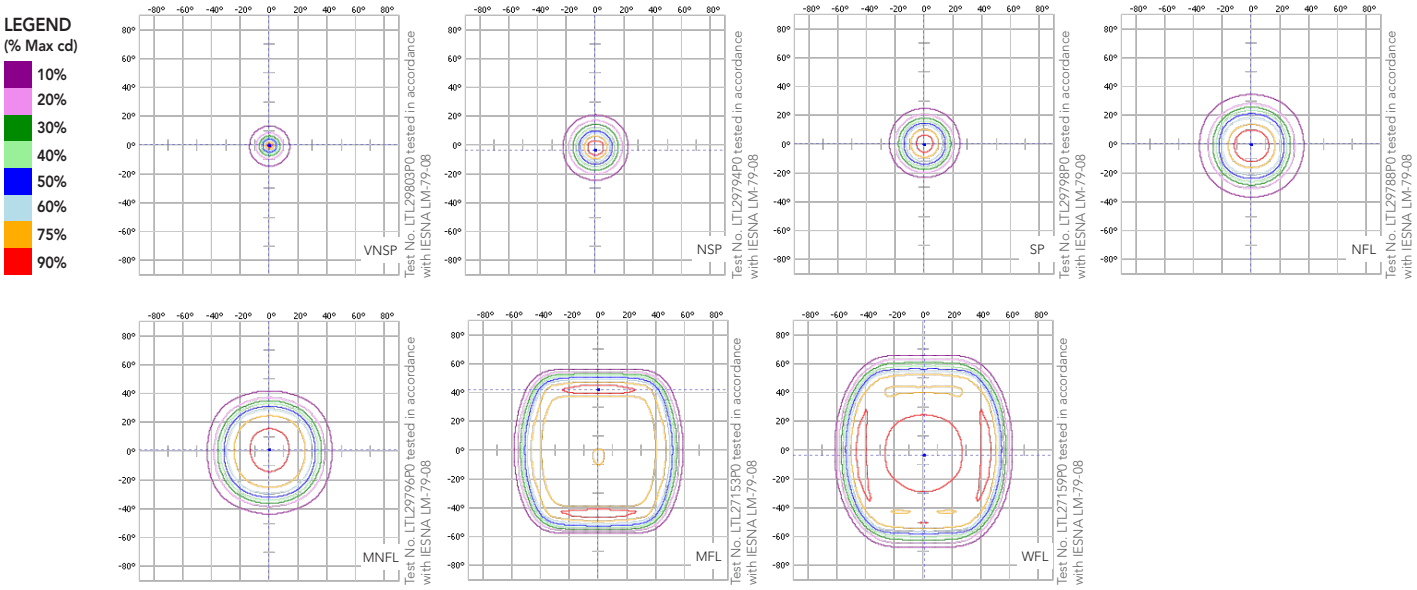

© 2014-2017 Acuity Brands Lighting, Inc. All rights reserved.

Mounting Bracket Summary

The following is a list of approved mounting brackets for use with the HLF2. These are rated for use in up to 90mph wind zones. Mounting brackets are ordered separate from the luminaires.

Steel Bullhorns

	Catalog Number	Weight (lbs.)	Max Luminaire Weight/Arm (lbs.)	Bracket EPA ft² (m²)	Bracket Configuration	Weight of Luminaires (lbs.)	Luminaire Tilt	Luminaire EPA ft² (m²)	Total EPA ft² (m²)
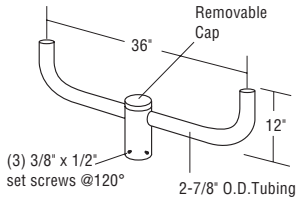	BS28	21	150	1.0 (0.09)	2 @ 180°	2 x 70 = 140	0°	2.3 (0.21)	5.6 (0.52)
							15°	2.5 (0.23)	6.0 (0.56)
							30°	2.9 (0.26)	6.8 (0.63)
							45°	4.2 (0.39)	9.4 (0.87)
							60°	4.6 (0.42)	10.2 (0.95)
							90°	5.4 (0.50)	11.8 (1.10)
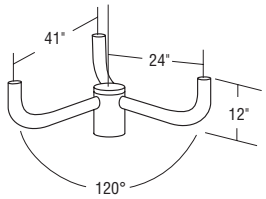	BS32	32	150	1.6 (0.14)	3 @ 180°	3 x 70 = 210	0°	2.3 (0.21)	8.5 (0.79)
							15°	2.5 (0.23)	9.1 (0.85)
							30°	2.9 (0.26)	10.3 (0.96)
							45°	4.2 (0.39)	14.2 (1.32)
							60°	4.6 (0.42)	15.4 (1.43)
							90°	5.4 (0.50)	17.8 (1.65)
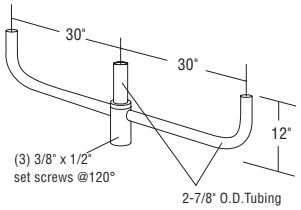	BS38	34	150	1.3 (0.12)	3 @ 120°	3 x 70 = 210	0°	2.3 (0.21)	8.2 (0.76)
							15°	2.5 (0.23)	8.8 (0.82)
							30°	2.9 (0.26)	10.0 (0.93)
							45°	4.2 (0.39)	13.9 (1.29)
							60°	4.6 (0.42)	15.1 (1.40)
							90°	5.4 (0.50)	17.5 (1.63)
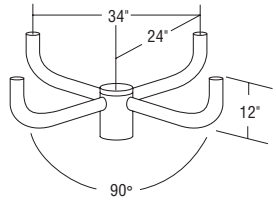	BS49	44	150	1.6 (0.14)	4 @ 90°	4 x 70 = 280	0°	2.3 (0.21)	10.8 (1.00)
							15°	2.5 (0.23)	11.6 (1.08)
							30°	2.9 (0.26)	13.2 (1.23)
							45°	4.2 (0.39)	18.4 (1.71)
							60°	4.6 (0.42)	20.0 (1.86)
							90°	5.4 (0.50)	23.2 (2.16)

© 2014-2017 Acuity Brands Lighting, Inc. All rights reserved.

Mounting Bracket Summary

The following is a list of approved mounting brackets for use with the HLF2. These are rated for use in up to 90mph wind zones. Mounting brackets are ordered separate from the luminaires.

*Aluminum Bullhorns	Catalog Number	Weight (lbs.)	Max Luminaire Weight/Arm (lbs.)	Bracket EPA ft² (m²)	Bracket Configuration	Weight of Luminaires (lbs.)	Luminaire Tilt	Luminaire EPA ft² (m²)	Total EPA ft² (m²)
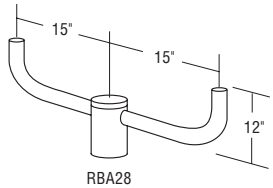 RBA28	*RBA28	8.4	100	1.3 (0.12)	2 @ 180°	2 x 70 = 140	0°	2.3 (0.21)	5.9 (0.55)
							15°	2.5 (0.23)	6.3 (0.59)
							30°	2.9 (0.26)	7.1 (0.66)
							45°	4.2 (0.39)	9.7 (0.90)
							60°	4.6 (0.42)	10.5 (0.98)
							90°	5.4 (0.50)	12.1 (1.12)
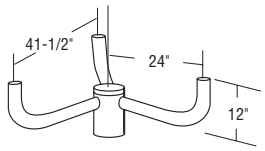 RBA32	*RBA32	14.3	100	1.7 (0.15)	3 @ 120°	3 x 70 = 210	0°	2.3 (0.21)	8.6 (0.80)
							15°	2.5 (0.23)	9.2 (0.85)
							30°	2.9 (0.26)	10.4 (0.97)
							45°	4.2 (0.39)	14.3 (1.33)
							60°	4.6 (0.42)	15.5 (1.44)
							90°	5.4 (0.50)	17.9 (1.66)
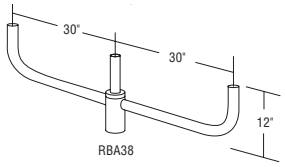 RBA38	*RBA38B	12.5	100	2.0 (0.18)	3 @ 180°	3 x 70 = 210	0°	2.3 (0.21)	8.9 (0.83)
							15°	2.5 (0.23)	9.5 (0.88)
							30°	2.9 (0.26)	10.7 (0.99)
							45°	4.2 (0.39)	14.6 (1.36)
							60°	4.6 (0.42)	15.8 (1.47)
							90°	5.4 (0.50)	18.2 (1.69)
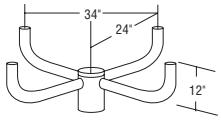 RBA49	*RBA49	17.5	100	2.2 (0.20)	4 @ 90°	4 x 70 = 280	0°	2.3 (0.21)	11.4 (1.06)
							15°	2.5 (0.23)	12.2 (1.13)
							30°	2.9 (0.26)	13.8 (1.28)
							45°	4.2 (0.39)	19.0 (1.77)
							60°	4.6 (0.42)	20.6 (1.91)
							90°	5.4 (0.50)	23.8 (2.21)

* This can only be used with 4.0" OD tenon/pole tops

*Steel Cross Arms (Square Poles only)	Catalog Number	Weight (lbs.)	Max Luminaire Weight/Arm (lbs.)	Bracket EPA ft² (m²)	Bracket Configuration	Weight of Luminaires (lbs.)	Luminaire Tilt	Luminaire EPA ft² (m²)	Total EPA ft² (m²)
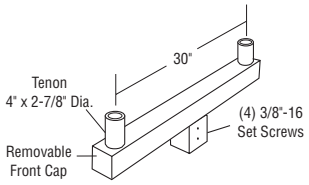 SBS28	SBS28*	30	250	1.1 (0.10)	2 @ 180°	2 x 70 = 140	0°	2.3 (0.21)	5.7 (0.53)
							15°	2.5 (0.23)	6.1 (0.57)
							30°	2.9 (0.26)	6.9 (0.64)
							45°	4.2 (0.39)	9.5 (0.88)
							60°	4.6 (0.42)	10.3 (0.96)
							90°	5.4 (0.50)	11.9 (1.11)
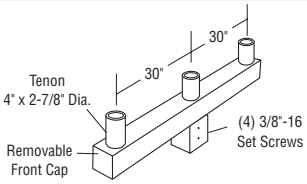 SBS38	SBS38*	42	150	1.7 (0.15)	3 @ 180°	3 x 70 = 210	0°	2.3 (0.21)	8.6 (0.80)
							15°	2.5 (0.23)	9.2 (0.85)
							30°	2.9 (0.26)	10.4 (0.97)
							45°	4.2 (0.39)	14.3 (1.33)
							60°	4.6 (0.42)	15.5 (1.44)
							90°	5.4 (0.50)	17.9 (1.66)

*Requires T20 (2-7/8" max OD) tenon on pole for mounting

© 2014-2017 Acuity Brands Lighting, Inc. All rights reserved.

Mounting Bracket Summary

The following is a list of approved mounting brackets for use with the HLF2. These are rated for use in up to 90mph wind zones. Mounting brackets are ordered separate from the luminaires.

Aluminum Cross Arms
(Square Poles only)

	Catalog Number	Weight (lbs.)	Max Luminaire Weight/Arm (lbs.)	Bracket EPA ft² (m²)	Bracket Configuration	Weight of Luminaires (lbs.)	Luminaire Tilt	Luminaire EPA ft² (m²)	Total EPA ft² (m²)
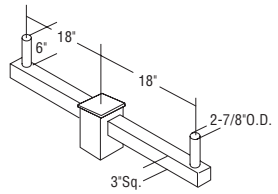 SBA28	SBA28-4	12	100	0.9 (0.08)	2 @ 180°	2 x 70 = 140	0°	2.3 (0.21)	5.5 (0.51)
							15°	2.5 (0.23)	5.9 (0.55)
							30°	2.9 (0.26)	6.7 (0.62)
							45°	4.2 (0.39)	9.3 (0.86)
							60°	4.6 (0.42)	10.1 (0.94)
							90°	5.4 (0.50)	11.7 (1.09)
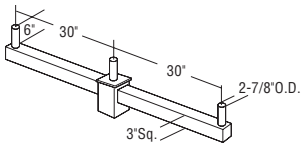 SBA38	SBA38-4	17	100	1.5 (0.13)	3 @ 180°	3 x 70 = 210	0°	2.3 (0.21)	8.4 (0.78)
							15°	2.5 (0.23)	9.0 (0.84)
							30°	2.9 (0.26)	10.2 (0.95)
							45°	4.2 (0.39)	14.1 (1.31)
							60°	4.6 (0.42)	15.3 (1.42)
							90°	5.4 (0.50)	17.7 (1.64)
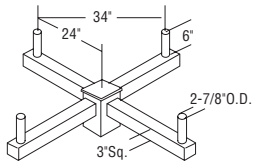 SBA49	SBA49-4	22	100	1.7 (0.15)	4 @ 90°	4 x 70 = 280	0°	2.3 (0.21)	10.9 (1.01)
							15°	2.5 (0.23)	11.7 (1.09)
							30°	2.9 (0.26)	13.3 (1.24)
							45°	4.2 (0.39)	18.5 (1.72)
							60°	4.6 (0.42)	20.1 (1.87)
							90°	5.4 (0.50)	23.3 (2.16)

Wall Mount Brackets

	Catalog Number	Weight (lbs.)	Max Luminaire Weight/Arm (lbs.)	Bracket EPA ft² (m²)	Bracket Configuration	Weight of Luminaires (lbs.)	Luminaire Tilt	Luminaire EPA ft² (m²)	Total EPA ft² (m²)
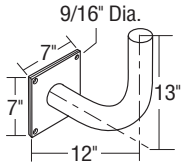	FRWB	12	80	N/A	1	1 x 70 = 70	0°	2.3 (0.21)	N/A
							15°	2.5 (0.23)	
							30°	2.9 (0.26)	
							45°	4.2 (0.39)	
							60°	4.6 (0.42)	
							90°	5.4 (0.50)	

FEATURES & SPECIFICATIONS

INTENDED USE
The contemporary design of the High Lumen LED Flood reflects its embedded high performance LED technology and its versatility. It is ideal for large signage, retail, sports fields, truck yards, and many commercial applications.

CONSTRUCTION
The High Lumen LED Flood's die-cast aluminum housing has integral heat sink fins to optimize thermal management through conductive and convective cooling. The LED drivers are mounted in direct contact with the casting to promote low operating temperature and long life. Housing is completely sealed against moisture and environment contaminants (IP66). Low EPA 5.7 ft² (0.52 m²) for optimized wind loading.

FINISH
Exterior parts are protected by a zinc-infused Super Durable TGIC thermoset powder coat finish that provides superior resistance to corrosion and weathering. A tightly controlled multi-stage process ensures a minimum 3 mils thickness for a finish that can withstand extreme climate changes without cracking or peeling.

OPTICS
Specular reflectors are engineered for superior field-to-beam ratios, uniformity, and spacing. Light engines are available in 3000 K (70 CRI min.), 4000 K (70 CRI min.) and 5000 K (70 CRI min.) configurations. Optional visors minimize uplight and reduce light trespass.

ELECTRICAL
Light engines consist of chip-on-board (COB) LEDs directly coupled to the housing to maximize heat dissipation and promote long life (100,000 hrs at 25°C, L83). Class 1 electronic driver has a power factor >90%, THD <20%, and has an expected life of 100,000 hours with <1% failure rate. 10kV surge protection meets a minimum Category C low operation per ANSI/IEEE C62.41.2.

INSTALLATION
Integral adjustable slipfitter or yoke mounting assemblies facilitate quick and easy installation with a variety of mounting accessories. This secure connection enables the High Lumen LED Flood to withstand up to a 1.5 G vibration load rating per ANSI/IEEE C136.31.

LISTINGS
CSA certified to U.S. and Canadian standards. IP 66 rated for outdoor applications. Rated for -40°C minimum ambient conditions.
DesignLights Consortium® (DLC) qualified product. Not all versions of this product may be DLC qualified. Please check the DLC Qualified Products List at www.designlights.org to confirm which versions are qualified.

WARRANTY
5-year limited warranty. Complete warranty terms located at:
www.acuitybrands.com/CustomerResources/Terms_and_conditions.aspx.

Note: Actual performance may differ as a result of end-user environment and application. All values are design or typical values, measured under laboratory conditions at 25 °C. Specifications subject to change without notice.

© 2014-2017 Acuity Brands Lighting, Inc. All rights reserved.

SINCE 1945 KEYSTONE

DIRECTDRIVE LED
LINE VOLTAGE T8 TUBES

KT-LED10.5T8-48G-840-D
T8 LED LAMP

DESCRIPTION
10.5W T8 LED | 4000K | >83 CRI | High Efficiency

LAMP TYPE: Linear	
BULB TYPE: T8 LED	
BASE TYPE: G13 (Medium Bi-Pin)	
WATTAGE: 10.5W	
COLOR TEMPERATURE: 4000K	
COLOR RENDERING INDEX (CRI): >83	
WARRANTY: 5 Years	

PRODUCT FEATURES
- Replacement for Conventional Fluorescent Lamp
- 50,000+ Hour Lifetime
- Approximately 40% More Energy Efficient that Standard F32T8 Lamps
- Environmentally Friendly: No Mercury Used
- UL Classified
- Operating Temperature: -20ºC/-4ºF to 45ºC/113ºF
- Listed on DLC Qualified Product List
- Integral Driver (Isolated), Eliminates the Need for External Driver or Ballast
- 100+ Lumens per Watt
- Instant Startup
- Frosted Lens Eliminates Pixelation

OPERATING SPECIFICATIONS

ELECTRICAL CHARACTERISTICS

Input Voltage	Power Consumption	Power Factor	Input Current
120-277Vac	10.5W	>0.9	.094A @ 120V .040A @ 277V

PHOTOMETRIC CHARACTERISTICS

Color Temperature (CCT)	4000K
Luminous Flux	1730 lm
Color Rendering Index (CRI)	>83
Efficacy	160 lm/W
Beam Angle	240º
Visible Light Area	325º

RATED LIFE

L70 (Hours)	50,000

SPECTRAL DISTRIBUTION

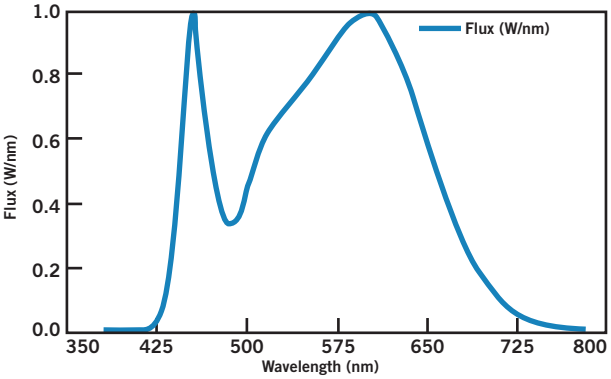

POLAR CANDELA DISTRIBUTION

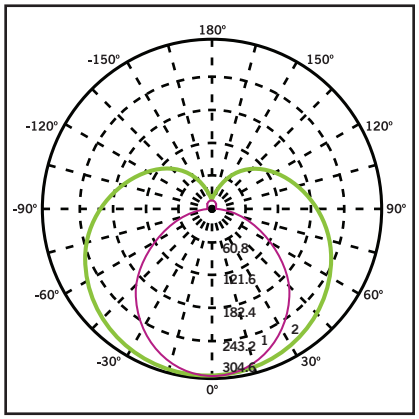

Maximum Candela = 1248.55
Located at Horizontal Angle = 0, Vertical Angle 0

1. **Violet** Vertical Plane through Horizontal Angles (90-270)
2. **Green** Vertical Plane through Horizontal Angles (0-180)

Keystone Technologies • 1390 Welsh Road, North Wales, PA 19454 • Phone (800) 464-2680 • Fax (888) 966-0556 • **www.keystonetech.com**

SINCE 1945 KEYSTONE

DIRECT DRIVE LED
LINE VOLTAGE T8 TUBES

KT-LED10.5T8-48G-840-D

T8 LED LAMP

WIRING DIAGRAMS

1. Cut all existing connections to ballast as shown below and remove ballast.

Typical Ballast Configurations:

PROGAM START

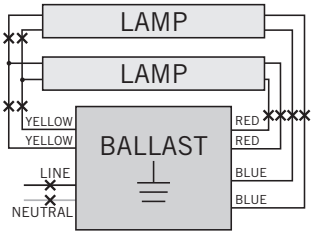

PREHEAT WITH STARTER

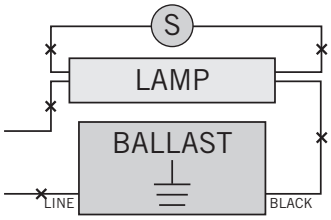

INSTANT START

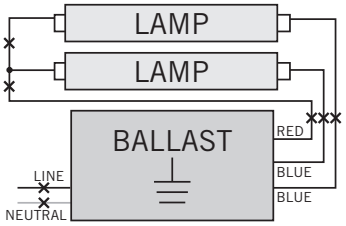

CAUTION: INSTANT START BALLAST WITH SHUNTED SOCKETS.

Typical Non-Shunted Lampholder

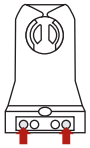

Connect wires directly to these terminals

CAUTION: Use only non-shunted lampholders. Do not install product in a fixture with shunted lampholders (found in all fixtures using instant start ballasts). If the current lampholders are shunted, remove them and replace them with non-shunted lampholders. Make new connections directly to terminals as indicated above.

Keystone can provide any style replacement lampholders. Call us at 800-464-2680.

2. Re-wire fixture as shown below.

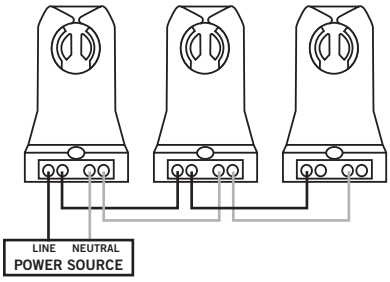

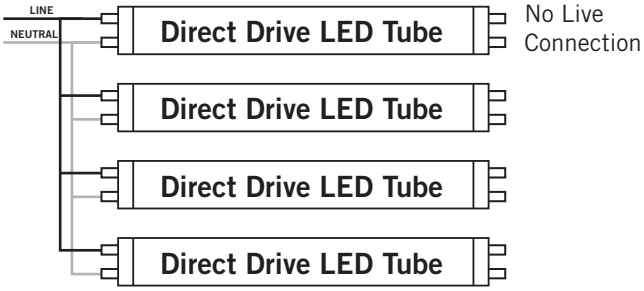

PHYSICAL CHARACTERISTICS

LAMP DIMENSIONS

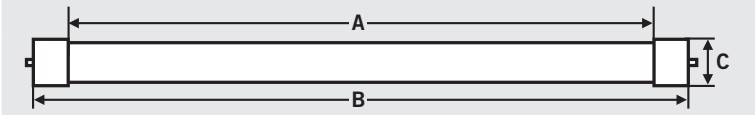

A (Illuminated Length)	44.38”
B (Body Length)	47.15”
C (Diameter)	1.10”

NOMINAL LENGTH: 48” **BASE TYPE:** G13 (Medium Bi-Pin)

ORDERING INFORMATION

ORDER CODE	PACKAGING STYLE	PACK QTY.	ITEM STATUS
KT-LED10.5T8-48G-840-D-CP	Carton Pack (Egg Crate Packaging)	25	Quick Ship

CATALOG NUMBER BREAKDOWN

KT-LED10.5T8-48G-840-D-CP

KT	LED	10.5	T8	48	G	840	D	CP
Keystone Technologies	LED Lamp	Wattage	Lamp Type	Nominal Length (Inches)	Glass	800 Series	Color Temp.	Direct Drive Series	Packaging Style

SINCE 1945 KEYSTONE | DIRECTDRIVE LED LINE VOLTAGE T5 TUBES

KT-LED25T5HO-48GC-840-D

T5 LED LAMP

DESCRIPTION

25W T5 LED | 4000K | >80 CRI | High Efficiency | Dedicated 277V Input

LAMP TYPE:	Linear
BULB TYPE:	T5 LED
BASE TYPE:	G5 (Miniature Bi-Pin)
WATTAGE:	25W
COLOR TEMPERATURE:	4000K
COLOR RENDERING INDEX (CRI):	>80
WARRANTY:	5 Years

PRODUCT FEATURES

- Listed on DLC QPL
- Replacement for Conventional Fluorescent Lamp
- 50,000+ Hour Lifetime
- Environmentally Friendly: No Mercury Used
- Instant Startup
- Direct Replacement for F54T5/HO Fluorencent Lamp
- Frosted Lens Eliminates Pixelation
- UL Classified
- Operating Temperature: -20ºC/-4ºF to 45ºC/113ºF
- Integral Driver (Isolated), Eliminates the Need for External Driver or Ballast
- 120+ Lumens per Watt
- Improved Lamp Durability with Shatterproof Coated Glass
- ETL Sanitation Listed NSF/ANSI Standard 2 - Food Equipment

OPERATING SPECIFICATIONS

ELECTRICAL CHARACTERISTICS

Input Voltage	Power Consumption	Power Factor	Input Current
277Vac	25W	>0.9	0.09A @ 277V

RATED LIFE

L70 (Hours)	50,000

PHOTOMETRIC CHARACTERISTICS

Color Temperature (CCT)	4000K
Luminous Flux	3300 lm
Color Rendering Index (CRI)	>80
Efficacy	132 lm/W
Beam Angle	240º
Visible Light Area	325º

SPECTRAL DISTRIBUTION

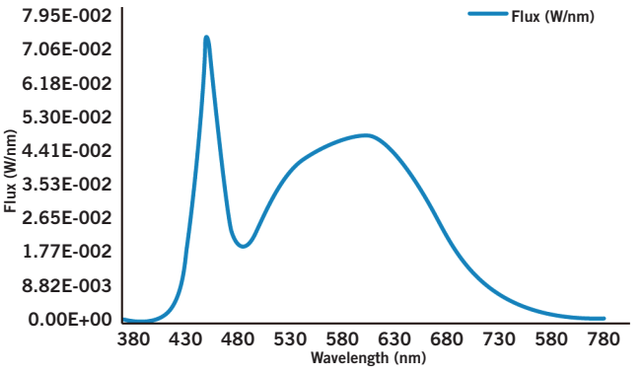

POLAR CANDELA DISTRIBUTION

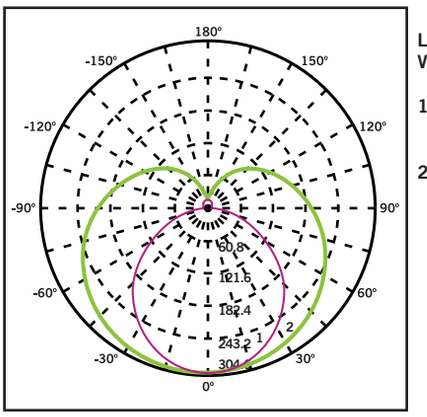

Located at Horizontal Angle = 0, Vertical Angle 0

1. **Violet** Vertical Plane through Horizontal Angles (90-270)
2. **Green** Vertical Plane through Horizontal Angles (0-180)

Keystone Technologies • 1390 Welsh Road, North Wales, PA 19454 • Phone (800) 464-2680 • Fax (888) 966-0556 • **www.keystonetech.com**

SINCE 1945 KEYSTONE | DIRECTDRIVE LED LINE VOLTAGE T5 TUBES

KT-LED25T5HO-48GC-840-D

T5 LED LAMP

WIRING DIAGRAMS

1. Cut all existing connections to ballast as shown below and remove ballast.

Typical Ballast Configurations:

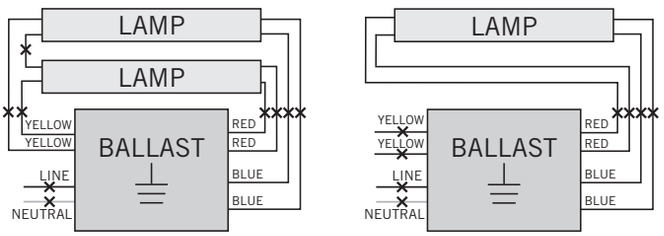

2. Re-wire fixture as shown below.

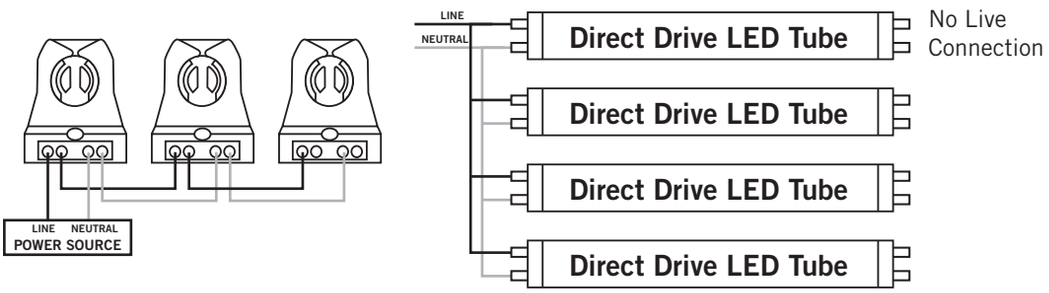

Typical Non-Shunted Lampholder

Connect wires directly to these terminals

CAUTION: Use only non-shunted lampholders.

Do not install product in a fixture with shunted lampholders (found in all fixtures using instant start ballasts). If the current lampholders are shunted, remove them and replace them with non-shunted lampholders. Make new connections directly to terminals as indicated above.

Keystone can provide any style replacement lampholders. Call us at 800-464-2680.

PHYSICAL CHARACTERISTICS

LAMP DIMENSIONS

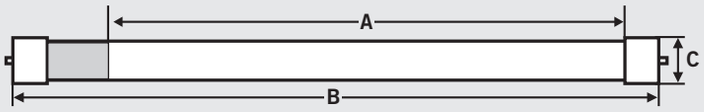

A (Illuminated Length)	41.38”
B (Body Length)	45.19”
C (Diameter)*	0.82”

NOMINAL LENGTH: 48” **BASE TYPE:** G5 (Miniature Bi-Pin)

*Though nominally referred to as a T5, this lamp has a T6 diameter

ORDERING INFORMATION

ORDER CODE	PACKAGING STYLE	PACK QTY.	ITEM STATUS
KT-LED25T5HO-48GC-840-D-CP	Carton Pack (Egg Crate Packaging)	25	Quick Ship

CATALOG NUMBER BREAKDOWN

KT-LED25T5HO-48GC-840-D-CP

KT	LED	25	T5HO	48	GC	840	D	CP
Keystone Technologies	LED Lamp	Wattage	Lamp Type	Nominal Length (Inches)	Shatter-Proof Coated Glass	800 Series	Color Temp.	Direct Drive Series	Packaging Style

d"series

D-Series Size 3
LED Flood Luminaire

Catalog Number

Notes

Type

Hit the Tab key or mouse over the page to see all interactive elements.

Specifications

EPA:	1.4 ft² (0.13 m²)
Depth:	5" (12.7 cm)
Width:	13" (33.0 cm)
Height:	13-5/8" (34.6 cm)
Overall Height	17-1/2" (44.5 cm)
Weight:	21 lbs (9.5 kg)

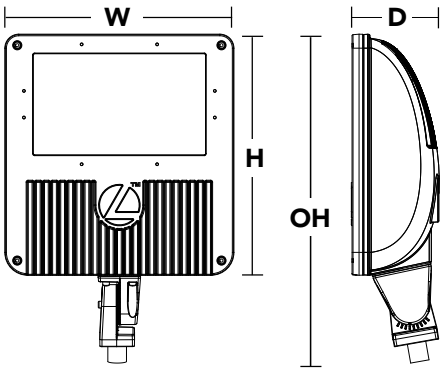

A+ Capable Luminaire

This item is an A+ capable luminaire, which has been designed and tested to provide consistent color appearance and system-level interoperability.

- All configurations of this luminaire meet the Acuity Brands' specification for chromatic consistency
- This luminaire is A+ Certified when ordered with DTL® controls marked by a shaded background. DTL DLL equipped luminaires meet the A+ specification for luminaire to photocontrol interoperability1
- This luminaire is part of an A+ Certified solution for ROAM® or XPoint™ Wireless control networks, providing out-of-the-box control compatibility with simple commissioning, when ordered with drivers and control options marked by a shaded background[1]

To learn more about A+, visit www.acuitybrands.com/aplus.

1. See ordering tree for details.
2. A+ Certified Solutions for ROAM require the order of one ROAM node per luminaire. Sold Separately: Link to Roam; Link to DTL DLL

A+ Capable options indicated by this color background.

Ordering Information

EXAMPLE: DSXF3 LED 6 P2 40K FL MVOLT THK DDBXD

DSXF3 LED

Series	Light Engines	Performance Package	Color Temperature	Distribution		Voltage		Mounting	
DSXF3 LED	6 Six COB engines	P1 P2	30K 3000 K 40K 4000 K 50K 5000 K	NSP Narrow spot MSP Medium spot MFL Medium flood FL Flood	WFL Wide flood WFR Wide flood, rectangular HMF Horizontal medium flood	MVOLT[1] 120[2] 208[2] 240[2]	277[2] 347[2] 480[2]	**Shipped included** THK Knuckle with 3/4" NPT threaded pipe YKC62 Yoke with 16-3 SO cord IS Integral slipfitter (fits 2-3/8" O.D. tenon)	**Shipped separately[3]** FTS CG6 Tenon slipfitter (fits 2-3/8" to 2-7/8" O.D. tenon. YKC62 required)

Options

Shipped installed

PER	NEMA twist-lock receptacle only (controls ordered separate)[4]
PER5	Five-wire receptacle only (controls ordered separate)[4,5]
DMG	0-10V dimming driver (controls ordered separate)
SF	Single fuse (120, 277, 347V)[2]
DF	Double fuse (208, 240, 480V)[2]
WTB	Utility terminal block

Shipped installed

PNMTDD3	Part night, dim till dawn[6]
PNMT5D3	Part night, dim 5 hrs.[6]
PNMT6D3	Part night, dim 6 hrs.[6]
PNMT7D3	Part night, dim 7 hrs.[6]
BL30	Bi-level switched dimming, 30%[7]
BL50	Bi-level switched dimming, 50%[7]

Shipped separately[8]

UBV	Upper/bottom visor (universal)
FV	Full visor
VG	Vandal guard
WG	Wire guard

Finish *(required)*

DDBXD	Dark bronze
DBLXD	Black
DNAXD	Natural aluminum
DWHXD	White

© 2011-2018 Acuity Brands Lighting, Inc. All rights reserved.

Ordering Information

Accessories

Ordered and shipped separately.

FTS CG6 DDBXD U	Slipfitter for 2-3/8" to 2-7/8" OD tenons; mates with yoke mount (specify finish)
FRWB DDBXD U	Radius wall bracket, 2-3/8" OD tenon (specify finish)
FSPB DDBXD U	Steel square pole bracket, 2-3/8" OD tenon (specify finish)
DSXF3UBV DDBXD U	Upper/bottom visor accessory (specify finish)
DSXF3FV DDBXD U	Full visor accessory (specify finish)
DSXF3VG U	Vandal guard accessory
DSXF3WG DBLXD U	Wire guard accessory
DLL127F 1.5 JU	Photocell - SSL twist-lock (120-277V)[8]
DLL347F 1.5 CUL JU	Photocell - SSL twist-lock (347V)[8]
DLL480F 1.5 CUL JU	Photocell - SSL twist-lock (480V)[8]
DSHORT SBK U	Shorting cap[8]

For more mounting options, visit our Floodlighting Accessories pages.

For more control options, visit DTL and ROAM online.

Stock configurations are offered for shorter lead times:

Standard Part Number	Stock Part Number	CI Code
DSXF3 LED 6 P1 40K WFL MVOLT IS DDBXD	**DSXF3 LED 6 P1 40K IS**	***236CXJ**
DSXF3 LED 6 P1 50K WFL MVOLT IS DDBXD	**DSXF3 LED 6 P1 50K IS**	***236CXG**
DSXF3 LED 6 P1 40K WFL MVOLT YKC62 DDBXD	**DSXF3 LED 6 P1 40K YKC62**	***236CXH**
DSXF3 LED 6 P1 50K WFL MVOLT YKC62 DDBXD	**DSXF3 LED 6 P1 50K YKC62**	***236CX8**
DSXF3 LED 6 P2 40K WFL MVOLT IS DDBXD	**DSXF3 LED 6 P2 40K IS**	***236CX6**
DSXF3 LED 6 P2 50K WFL MVOLT IS DDBXD	**DSXF3 LED 6 P2 50K IS**	***236CX3**
DSXF3 LED 6 P2 40K WFL MVOLT YKC62 DDBXD	**DSXF3 LED 6 P2 40K YKC62**	***236CX5**
DSXF3 LED 6 P2 50K WFL MVOLT YKC62 DDBXD	**DSXF3 LED 6 P2 50K YKC62**	***236CX2**

NOTES

1. MVOLT driver operates on any line voltage from 120-277V.
2. Single fuse (SF) requires 120, 277 or 347 voltage option. Double fuse (DF) requires 208, 240 or 480 voltage option.
3. Must be ordered as an accessory; see Accessories information at left.
4. For units with a photocontrol receptacle, the mounting must be restricted to ± 45° from horizontal aim per ANSI C136.10-2010.
5. Specifies a ROAM® enabled luminaire with 0-10V dimming capability; PER5 option required. Additional hardware and services required for ROAM® deployment; must be purchased separately. Call 1-800-442-6745 or email: sales@roamservices.net.
6. MVOLT only. Not available with 347V, 480V, PER5, BL30 or BL50.
7. Requires (2) separately switched circuits. MVOLT only. Not available with 347V, 480V, or PER5.
8. Requires luminaire to be specified with PER option. Reference PER table on Page 2 for functionality.

Performance Data

Lumen Output

Lumen values are from photometric tests performed in accordance with IESNA LM-79-08. Data is considered to be representative of the configurations shown, within the tolerances allowed by Lighting Facts. Contact factory for performance data on any configurations not shown here.

Light Engines	Performance Package	System Watts	Dist. Type	Field Angle		Beam Angle		30K (3000 K, 70 CRI)			40K (4000 K, 70 CRI)			50K (5000 K, 70 CRI)		
				°H	°V	°H	°V	Max Cd	Lumens	LPW	Max Cd	Lumens	LPW	Max Cd	Lumens	LPW
6	P1	129	NSP	38	35	18	18	84476	13,510	105	88800	14,201	110	88800	14,201	110
			MSP	53	52	27	27	49237	12,774	99	51757	13,428	104	51757	13,428	104
			MFL	59	59	45	45	22746	12,986	101	23911	13,650	106	23911	13,650	106
			FL	84	90	61	71	11658	13,952	108	12255	14,666	114	12255	14,666	114
			WFL	104	105	73	76	9435	14,454	112	9918	15,194	118	9918	15,194	118
			WFR	104	91	80	72	9546	14,377	111	10035	15,113	117	10035	15,113	117
			HMF	121	67	94	55	10455	13,238	103	10991	13,916	108	10991	13,916	108
	P2	183	NSP	38	35	18	18	105595	16,887	92	111000	17,751	97	111000	17,751	97
			MSP	53	52	27	27	61546	15,968	87	64696	16,785	92	64696	16,785	92
			MFL	59	59	45	45	28433	16,232	89	29888	17,063	93	29888	17,063	93
			FL	84	90	61	71	14573	17,440	95	15319	18,333	100	15319	16,548	90
			WFL	104	105	73	76	11794	18,067	99	12397	18,992	104	12397	18,992	104
			WFR	104	91	80	72	11933	17,972	98	12543	18,891	103	12543	18,891	103
			HMF	121	67	94	55	13069	16,548	90	13738	17,395	95	13738	17,395	95

Lumen Ambient Temperature (LAT) Multipliers

Use these factors to determine relative lumen output for average ambient temperatures from 0-35°C (32-95°F).

Ambient		Lumen Multiplier
0°C	32°F	1.08
0°C	50°F	1.05
20°C	68°F	1.02
25°C	**77°F**	**1.00**
30°C	86°F	0.98
35°C	95°F	0.96

Projected LED Lumen Maintenance

Data references the extrapolated performance projections for the DSXF3 LED 6 P2 platform based on 13,000 hours of LED testing (tested per IESNA LM-80-08 and projected per IESNA TM-21-11).

To calculate LLF, use the lumen maintenance factor that corresponds to the desired number of operating hours below. For other lumen maintenance values, contact factory.

Operating Hours	0	25,000	50,000	100,000
Lumen Maintenance Factor	1.0	0.97	0.97	0.96

Electrical Load

Performance Package	System Watts	Current (A)					
		120V	208V	240V	277V	347V	480V
P1	129	1.08	0.62	0.54	0.47	0.38	0.29
P2	183	1.54	0.87	0.75	0.65	0.53	0.40

PER Table

Control	PER (3 wire)	PER5 (5 wire)		PER7 (7 wire)		
			Wire 4/Wire5		Wire 4/Wire5	Wire 6/Wire7
Photocontrol Only (On/Off)	✓	⚠	Wired to dimming leads on driver	⚠	Wired to dimming leads on driver	Wires Capped inside fixture
ROAM	⊘	✓	Wired to dimming leads on driver	⚠	Wired to dimming leads on driver	Wires Capped inside fixture
ROAM with Motion	⊘	⚠	Wired to dimming leads on driver	⚠	Wired to dimming leads on driver	Wires Capped inside fixture
Futureproof*	⊘	⚠	Wired to dimming leads on driver	✓	Wired to dimming leads on driver	Wires Capped inside fixture
Futureproof* with Motion	⊘	⚠	Wired to dimming leads on driver	✓	Wired to dimming leads on driver	Wires Capped inside fixture

*Futureproof means: Ability to change controls in the future.

✓ Recommended

⊘ Will not work

⚠ Alternate

© 2011-2018 Acuity Brands Lighting, Inc. All rights reserved.

Photometric Diagrams

To see complete photometric reports or download .ies files for this product, visit Lithonia Lighting's D-Series Flood Size 3 homepage.

Isocandela plots for the DSXF3 LED 6 P2 40K. Distances are in units of mount height (20ft).

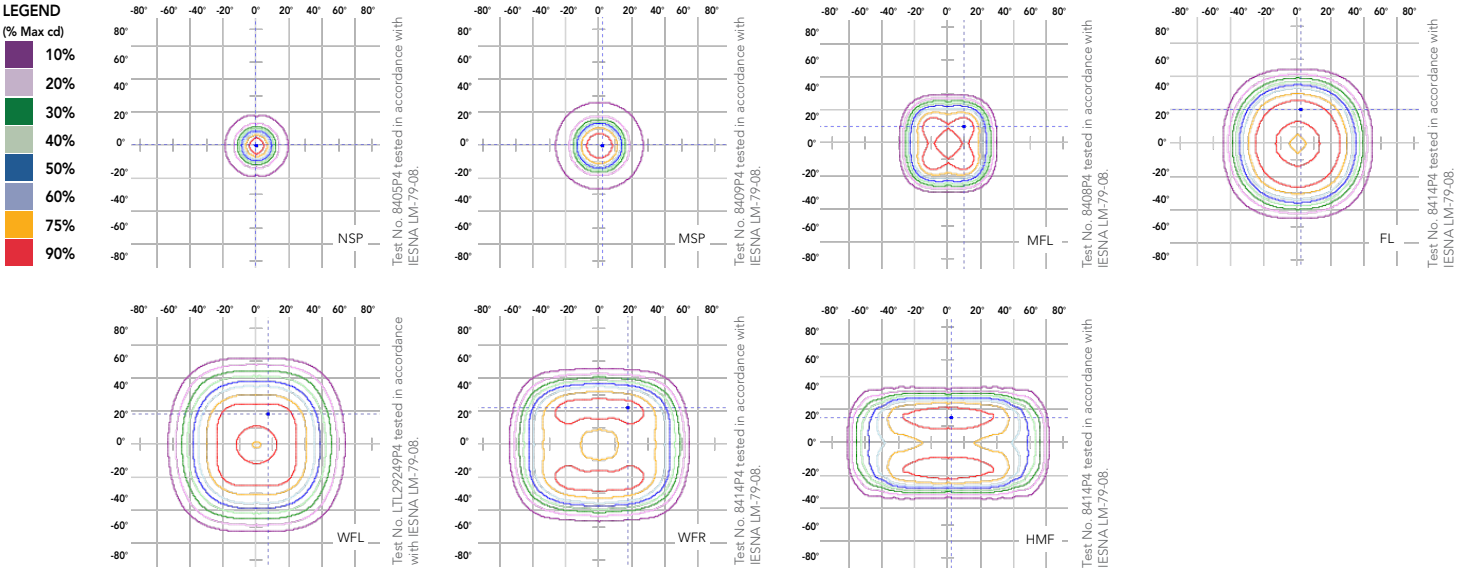

Mounting, Options and Accessories

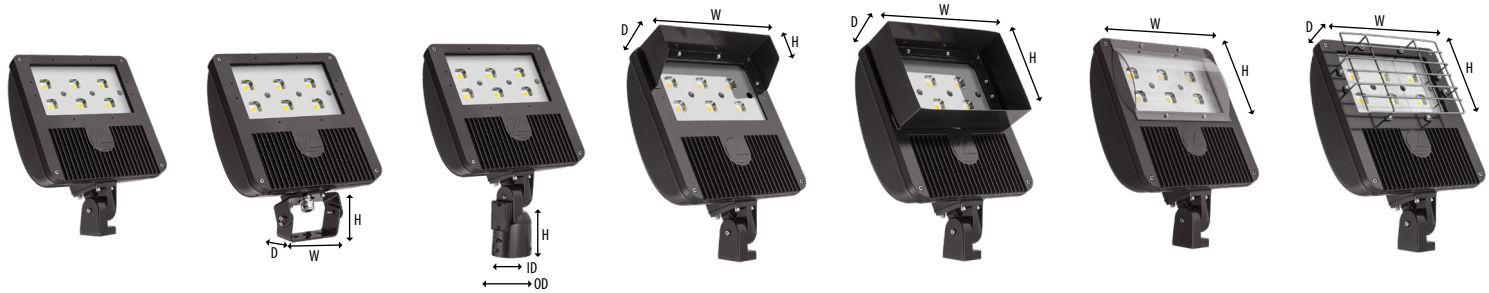

THK - Knuckle with 3/4" NPT threaded pipe

YKC62 - Yoke with SO cord
W= 5" (12.7 cm)
H= 3-1/2" (8.8 cm)
D= 2" (5.0 cm)

IS – Integral slipfitter
H= 4-1/2" (11.4 cm)
ID= 2-3/8" (6.0 cm)
OD= 3-1/2" (8.8cm)

UBV – Upper/bottom visor
W= 12" (30.4 cm)
H= 7-1/5" (19.0 cm)
D= 3" (7.6 cm)

FV – Full visor
W= 12" (30.4 cm)
H= 7-1/5" (19.0 cm)
D= 3" (7.6 cm)

VG – Vandal guard
W= 10-1/2" (26.6 cm)
H= 7-1/2" (19.0 cm)

WG – Wire guard
W= 10-1/2" (26.6 cm)
H= 7-1/2" (19.0 cm)
D= 1-1/5" (3.8 cm)

FEATURES & SPECIFICATIONS

INTENDED USE
The sleek design of the D-Series Size 3 Flood reflects the embedded high performance LED technology. It is ideal for wallwash, security and general area lighting in many commercial and institutional applications.

CONSTRUCTION
Die-cast aluminum housing has integral heat sink fins to optimize thermal management through conductive and convective cooling. The LED driver is mounted in direct contact with the casting to promote low operating temperature and long life. Housing is completely sealed against moisture and environmental contaminants (IP66). Low EPA (1.4 ft^2) for optimized wind loading.

FINISH
Exterior parts are protected by a zinc-infused Super Durable TGIC thermoset powder coat finish that provides superior resistance to corrosion and weathering. A tightly controlled multi-stage process ensures a minimum 3 mils thickness for a finish that can withstand extreme climate changes without cracking or peeling.

OPTICS
A variety of precision-molded vacuum-metallized specular reflectors are engineered for superior field-to-beam ratios, uniformity and spacing. Light engines are available in 3000 K (70 CRI min.), 4000 K (70 CRI min.) or 5000 K (70 CRI min.) configurations. Optional visors offer additional versatility.

ELECTRICAL
Light engines consist of chip-on-board (COB) LEDs directly coupled to the housing to maximize heat dissipation and promote long life (100,000 hrs, L80). Class 1 electronic driver has a power factor >90%, THD <20%, and has an expected life of 100,000 hours with <1% failure rate. Surge protection meets a minimum Category C Low operation (per ANSI/IEEE C62.41.2).

INSTALLATION
Integral adjustable knuckle with 3/4-14 NPT threaded pipe, or yoke mounting, facilitates quick and easy installation to a variety of mounting accessories. This secure connection enables the D-Series Size 3 to withstand up to a 1.5 G vibration load rating per ANSI C136.31.

LISTINGS
CSA certified to U.S. and Canadian standards. Luminaire is IP66 rated. Rated for -40°C minimum ambient.
DesignLights Consortium® (DLC) qualified product. Not all versions of this product may be DLC qualified. Please check the DLC Qualified Products List at www.designlights.org to confirm which versions are qualified.

WARRANTY
5-year limited warranty. Complete warranty terms located at:
www.acuitybrands.com/CustomerResources/Terms_and_conditions.aspx.

Note: Actual performance may differ as a result of end-user environment and application. All values are design or typical values, measured under laboratory conditions at 25 °C. Specifications subject to change without notice.

© 2011-2018 Acuity Brands Lighting, Inc. All rights reserved.

PROJECT NAME:_____ CATALOG NUMBER:_____

NOTES:_____ FIXTURE SCHEDULE:_____

LED OMNIDIRECTIONAL A-LAMP

OPEN & ENCLOSED RATED A19 GEN 2 JA8 SERIES

10W, E26

10W, GU24

PRODUCT DESCRIPTION:

Designed to meet Title 24 code for the State of California, these JA8 LED A-lamps deliver even lighting equivalent to that of a 60W incandescent bulb, while consuming nearly 83 percent less energy. Open and enclosed rated models are available in two color temperatures.

FEATURES:

- Wattage: 10W, replacement for 60W Inc.
- Lumens: 800
- ENERGY STAR certified
- JA8 Listed
- CEC Listed
- CRI: ≥92
- R9: ≥50
- Beam Angle: 300˚
- Min. Dimming: ≤10%
- Saves more than 83% on energy
- Power factor: ≥ 0.90
- Tc Max = 100°C
- Suitable for use in damp locations
- Suitable for use in fully enclosed luminaires (E10A19DLED927/G2/JA8, E10A19DLED930/G2/JA8, E10A19GUD927/G2/JA8 & E10A19GUD930/G2/JA8)
- Five year limited warranty
- 25,000 hour life (L70 standards)

APPLICATIONS:

- Pendants
- Table and floor lamps
- Sconces

MODEL SELECTION (Full list of order codes on pg. 2) — Typical order example: 10A19DLED927/G2/JA8

10A19	DLED	
FAMILY	**BASE & DIMMABILITY**	**CRI & CCT**
10A19= 10 watts, Open Rated A19	**DLED=** E26, Dimmable	**927/G2/JA8=** 92 CRI, 2700K **930/G2/JA8=** 92 CRI, 3000K
E10A19	**DLED**	
FAMILY	**BASE & DIMMABILITY**	**CRI & CCT**
E10A19= 10 watts, Enclosed Rated A19	**DLED=** E26, Dimmable	**927/G2/JA8=** 92 CRI, 2700K **930/G2/JA8=** 92 CRI, 3000K
E10A19	**GUD**	
FAMILY	**BASE & DIMMABILITY**	**CRI & CCT**
E10A19= 10 watts, Enclosed Rated A19	**GUD=** GU24, Dimmable	**927/G2/JA8=** 92 CRI, 2700K **930/G2/JA8=** 93 CRI, 3000K

NOTES:

1. See page 3 for a list of compatible dimmers.

SPECIFICATIONS:

ITEM	SPECIFICATION	10A19DLED9xx/G2/JA8	E10A19DLED9xx/G2/JA8	E10A19GUD9xx/G2/JA8
		OPEN RATED - DETAILS	ENCLOSED RATED - DETAILS	
GENERAL PERFORMANCE	Power Consumption	10W		
	Lumens Delivered	800		
	Efficacy (lm/w)	80		
	CRI	≥92		
	R9	≥50		
	Color Temperature (CCT)	2700K, 3000K		
	Lumen Maintenance (L70)	25,000 Hours		
ELECTRICAL	Power Factor	≥0.90		
	Input Voltage	120V		
PHYSICAL	Base Type	E26		GU24
	Operating Temperature	-4°F - 104°F		
CERTIFICATION	Environment	Dry, Damp	Dry, Damp, Enclosed	
	Warranty	5 Year Limited		

ORDERING:

ORDER CODE	MODEL	ENERGY STAR	CCT	WATTS	EQUIVALENCY	OUTPUT (LUMENS)	EFFICACY (lm/W)	CRI	DIMENSIONS (D" x MOL")
OPEN RATED - E26 BASE MODEL									
1408959	10A19DLED927/G2/JA8	★	2700K	10	60W Inc.	800	80	92	2.36" x 4.30"
1409224	10A19DLED930/G2/JA8	★	3000K						
ENCLOSED RATED - E26 BASE MODEL									
1408960	E10A19DLED927/G2/JA8	★	2700K	10	60W Inc.	800	80	92	2.36" x 4.30"
1409192	E10A19DLED930/G2/JA8	★	3000K						
ENCLOSED RATED - GU24 BASE MODEL									
1409883	E10A19GUD927/G2/JA8	★	2700K	10	60W Inc.	800	80	92	2.36" x 4.21"
1409884	E10A19GUD930/G2/JA8	★	3000K					93	

★ **ENERGY STAR Certified**

COMPATIBLE DIMMER LIST:

MANUFACTURE	DIMMER MODEL
AH	SDM/600
	SDM3/1000
ALMOND	LUXDM600-12
CTL	DM600-12-3
GE	18024
LEVITON	6631
	6672
	6683
	603-6631-A

MANUFACTURE	DIMMER MODEL
LEVITON	6631-A
	6631-LA
	6683-10Z
	IPI06-1LZ
	IPI10-1LZ
	IPL06
LUTRON	AYCL-153P-WH
	AYCL-153PH
	DVCL-153P-WH

MANUFACTURE	DIMMER MODEL
LUTRON	DVWCL-153PH-WHC
	S-603PH-WH
	SCL-153PH-WH
	TGCL-153PH-WH
MAAXIMA	MEW-DM600

LED OMNIDIRECTIONAL A-LAMP

ENCLOSED RATED A21 JA8 SERIES

17W, E26

PRODUCT DESCRIPTION:

Designed to meet Title 24 code for the State of California, these JA8 LED A-lamps deliver even lighting equivalent to that of a 100W incandescent bulb, while consuming nearly 83 percent less energy. Enclosed rated models are available in two color temperatures.

FEATURES:

- Wattage: 17W, replacement for 100W Inc.
- Lumens: 1,600
- Efficacy (lm/W): 94
- ENERGY STAR Certified
- CRI: ≥91
- R9: ≥50
- Beam Angle: 300˚
- Min. Dimming: ≤10%
- Saves more than 83% on energy
- Power factor: ≥ 0.90
- Standard E26 base
- Tc Max = 100°C
- Suitable for use in damp locations
- Suitable for use in fully enclosed luminaires
- Five year limited warranty
- 25,000 hour life (L70 standards)
- JA8 Listed
- CEC Listed

APPLICATIONS:

- Pendants
- Table and floor lamps
- Sconces

MODEL SELECTION (Full list of order codes on pg. 2) — Typical order example: E17A21DLED927/JA8

E17A21	DLED	
FAMILY	**BASE & DIMMABILITY**	**CRI & CCT**
E17A21= 17 watts, Enclosed Rated A21	**DLED=** E26, Dimmable	**927/JA8=** 91 CRI, 2700K **930/JA8=** 92 CRI, 3000K

NOTES:

1. Compatible dimmers list on page 2

SPECIFICATIONS:

ITEM	SPECIFICATION	E17A21DLED9xx/JA8 DETAILS
GENERAL PERFORMANCE	Power Consumption	17W
	Lumens Delivered	1600
	Efficacy (lm/w)	94
	CRI	≥91
	R9	≥50
	Color Temperature (CCT)	2700K, 3000K
	Lumen Maintenance (L70)	25,000 Hours
ELECTRICAL	Power Factor	≥0.90
	Input Voltage	120V
PHYSICAL	Base Type	E26
	Operating Temperature	-4°F - 104°F
CERTIFICATION	Environment	Dry, Damp
	Warranty	5 Year Limited

ORDERING:

ORDER CODE	MODEL	ENERGY STAR	WATTS	EQUIVALENCY	OUTPUT (LUMENS)	EFFICACY (lm/W)	CRI	CCT	DIMENSIONS (D" x MOL")
ENCLOSED RATED - E26 BASE MODEL									
1409885	E17A21DLED927/JA8	★	17	100W Inc.	1600	80	91	2700K	2.82" x 5.47"
1409886	E17A21DLED930/JA8	★					92	3000K	

★ **ENERGY STAR Certified**

COMPATIBLE DIMMER LIST:

MANUFACTURE	DIMMER MODEL
AH	SDM/600
	SDM3/1000
CTL	SW-DM600-12-3
GE	18024
LEVITON	6631-A
	6631-LA

MANUFACTURE	DIMMER MODEL
LUTRON	AYCL-153P
	AYCL-153PH
	D-600R
	D-600PH-DK
	DV-600PH
	DV-603P
	DV-603PH
	DV-603PR
	DVW-600PH

MANUFACTURE	DIMMER MODEL
LUTRON	LGCL-153PLH
	MACL-153MH
	MACL-153MLH
	MACL-153MR
	S-600
	S-600P
	S-603PH
	TGCL-153PH
	TG-600PH

d#series

D-Series Size 1
LED Flood Luminaire

Catalog Number

Notes

Type

Hit the Tab key or mouse over the page to see all interactive elements.

Introduction

D-Series Size 1 Flood features advanced optics and precision illumination in a sleek and compact form that seamlessly blends with the environment. State of the art reflector design with cutting edge chip-on-board LED technology produces excellent uniformity using precision beam patterns. Provides long-life replacement for 70-150W metal halide floodlights offering up to 77% energy savings with expected service life of over 100,000 hours.

Specifications

EPA:	0.6 ft² (0.05 m²)
Depth:	3-1/8″ (8.0 cm)
Width:	8-7/8″ (22.4 cm)
Height:	7-3/4″ (19.8 cm)
Overall Height	12″ (30.5 cm)
Weight:	7.2 lbs (3.3 kg)

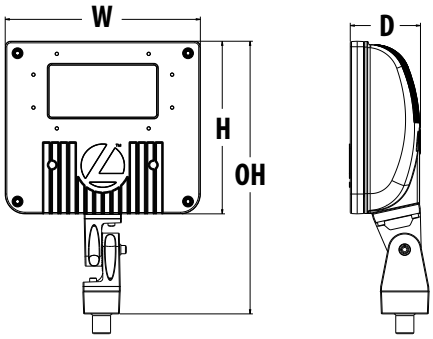

Ordering Information

EXAMPLE: DSXF1 LED P1 40K MSP MVOLT THK DDBXD

DSXF1 LED

Series	Performance Package	Color Temperature	Distribution	Voltage	Mounting	Options	Finish *(required)*
DSXF1 LED	P1 P2	30K 3000K 40K 4000K 50K 5000K	NSP Narrow spot MSP Medium spot MFL Medium flood FL Flood WFL Wide flood WFR Wide flood, rectangular HMF Horizontal flood	MVOLT [1] 120 [2] 208 [2] 240 [2] 277 [2] 347 [2]	**Shipped included** THK Knuckle with 1/2″ NPS threaded pipe IS Integral slipfitter (fits 2-3/8″ O.D. tenon) YKC62 Yoke with 16-3 SO cord **Shipped separately** [3] DSXF1/2TS Tenon slipfitter (2-3/8″ O.D. THK required) FTS CG6 Tenon Slipfitter (fits 2-3/8″ to 2-7/8″ O.D. tenon. YKC62 required)	**Shipped installed** PE Photocontrol, button style [4,5] PEX Photocontrol external threaded adjustable [5] SF Single fuse (120, 277, 347V) [2] DF Double fuse (208, 240) [2] DMG 0-10V dimming driver (no controls) **Shipped separately** [3] UBV Upper/bottom visor (universal) FV Full visor VG Vandal guard	DDBXD Dark bronze DBLXD Black DNAXD Natural aluminum DWHXD White

Accessories

Ordered and shipped separately.

DSXF1/2TS DDBXD U	Slipfitter for 1-1/4″ to 2-3/8″ OD tenons; mates with 1/2″ threaded knuckle (specify finish)
FRWB DDBXD U	Radius wall bracket, 2-3/8″ OD tenon (specify finish)
FSPB DDBXD U	Steel square pole bracket, 2-3/8″ OD tenon (specify finish)
DSXF1UBV DDBXD U	Upper/bottom visor accessory (specify finish)
DSXF1FV DDBXD U	Full visor accessory (specify finish)
DSXF1VG U	Vandal guard accessory

For more mounting options, visit our Floodlighting Accessories pages.

Stock configurations are offered for shorter lead times:

Standard Part Number	Stock Part Number	CI Code
DSXF1 LED P1 40K WFL MVOLT THK DDBXD	DSXF1 LED P1 40K	*240TJH
DSXF1 LED P1 50K WFL MVOLT THK DDBXD	DSXF1 LED P1 50K	*240TJG
DSXF1 LED P1 40K WFL MVOLT YKC62 DDBXD	DSXF1 LED P1 40K YK	*263KL9
DSXF1 LED P1 50K WFL MVOLT YKC62 DDBXD	DSXF1 LED P1 50K YK	*263UJE
DSXF1 LED P2 40K WFL MVOLT THK DDBXD	DSXF1 LED P2 40K	*240TJL
DSXF1 LED P2 50K WFL MVOLT THK DDBXD	DSXF1 LED P2 50K	*240TJJ
DSXF1 LED P2 40K WFL MVOLT YKC62 DDBXD	DSXF1 LED P2 40K YK	*263KLA
DSXF1 LED P2 50K WFL MVOLT YKC62 DDBXD	DSXF1 LED P2 50K YK	*263UJG
DSXF1/2 Slip-fitter Tenon Accessory DDBXD	DSXF1/2TS DDBXD U	*216G5K

NOTES

1. MVOLT driver operates on line voltage from 120-277V.
2. Single fuse (SF) requires 120V, 277V or 347V. Double fuse (DF) requires 208V, 240V or 480V.
3. Also available as accessories; see Accessories information at left.
4. Rated 25C maximum ambient for performance package P2. Specify PEX for higher ambient temperatures.
5. Photocontrol (PE, PEX) requires 120, 208, 240, 277 or 347 voltage option.
6. Must specify 120, 277 or 347 voltage option.

© 2012-2018 Acuity Brands Lighting, Inc. All rights reserved.

Performance Data

Lumen Output

Lumen values are from photometric tests performed in accordance with IESNA LM-79-08. Data is considered to be representative of the configurations shown, within the tolerances allowed by Lighting Facts. Actual performance may differ as a result of end-user environment and application. Actual wattage may differ by +/- 8% when operating between 120-480V +/- 10%. Contact factory for performance data on any configurations not shown here.

Performance Package	System Watts	Dist. Type	Field Angle		Beam Angle		30K (3000K, 70 CRI)			40K (4000K, 70 CRI)			50K (5000K, 70 CRI)		
			°H	°V	°H	°V	Max Cd	Lumens	LPW	Max Cd	Lumens	LPW	Max Cd	Lumens	LPW
P1	21W	NSP	37	38	18	19	16,316	2,601	124	18,039	2,876	137	18,039	2,876	137
		MSP	51	51	27	28	9,908	2,578	123	10,954	2,850	136	10,954	2,850	136
		MFL	60	60	46	45	4,027	2,435	116	4,452	2,692	128	4,452	2,692	128
		FL	84	91	59	72	2,255	2,682	128	2,494	2,965	141	2,494	2,965	141
		WFL	109	101	86	85	1,494	2,766	132	1,652	3,058	146	1,652	3,058	146
		WFR	103	92	80	71	1,809	2,794	133	2,000	3,089	147	2,000	3,089	147
		HMF	124	63	100	48	2,001	2,329	111	2,212	2,575	123	2,212	2,575	123
P2	42W	NSP	37	38	18	19	29,740	4,741	113	32,881	5,242	125	32,881	5,242	125
		MSP	51	51	27	28	18,060	4,699	112	19,967	5,195	124	19,967	5,195	124
		MFL	60	50	46	45	7,340	4,439	106	8,115	4,908	117	8,115	4,908	117
		FL	84	91	59	72	4,111	4,889	116	4,545	5,406	129	4,545	5,405	129
		WFL	109	101	86	85	2,568	4,753	113	3,011	5,573	133	3,011	5,573	133
		WFR	103	92	80	71	3,297	5,094	121	3,645	5,631	134	3,645	5,632	134
		HMF	124	63	100	48	3,647	4,245	101	4,032	4,693	112	4,032	4,693	112

IF REPLACING OLD BELOW	USE NEW BELOW	RECOMMENDED	ALSO CONSIDER
DSXF1 LED 1	DSXF1 LED P1	Summary, customer gets ~ 900 more lumens* at slightly higher watts	---
DSXF1 LED 2	DSXF1 LED P2	Summary, customer gets ~ 1500 more lumens* at higher watts	Consider dropping down to DSXF1 LED P1, however 900 lumens less VS. older design, but at half the watts
DSXF2 LED 3	DSXF1 LED P2	Summary, use size 1-P2 at lower watts, roughly same lumens	If staying with size two, same watts, but 2000 more lumens
DSXF2 LED 4	DSXF2 LED P1	Summary, use size 2-P1 at lower watts, roughly same lumens	---

Lumen Ambient Temperature (LAT) Multipliers

Use these factors to determine relative lumen output for average ambient temperatures from 0-40°C (32-104°F).

Ambient	
0°C	32°F
10°C	50°F
20°C	68°F
25°C	**77°F**
30°C	86°F
40°C	104°F

Projected LED Lumen Maintenance

Data references the extrapolated performance projections for the **DSXF1 LED P2** platform noted in a 25C ambient, based on 10,000 hours of LED testing (tested per IESNA LM-80-08 and projected per IESNA TM-21-11).

To calculate LLF, use the lumen maintenance factor that corresponds to the desired number of operating hours below. For other lumen maintenance values, contact factory.

Operating Hours	0	25,000	50,000	100,000
Lumen Maintenance Factor	1.0	0.97	0.96	0.95

Electrical Load

		Current (A)					
Light Engines	System Watts	120	208	240	277	347	480
P1	21W	0.18	0.1	0.09	0.08	0.07	-
P2	42W	0.35	0.20	0.18	0.15	0.12	-

Photometric Diagrams

To see complete photometric reports or download .ies files for this product, visit Lithonia Lighting's D-Series Flood Size 1 homepage.

Isocandela plots for the DSXF1 LED P2 40K.

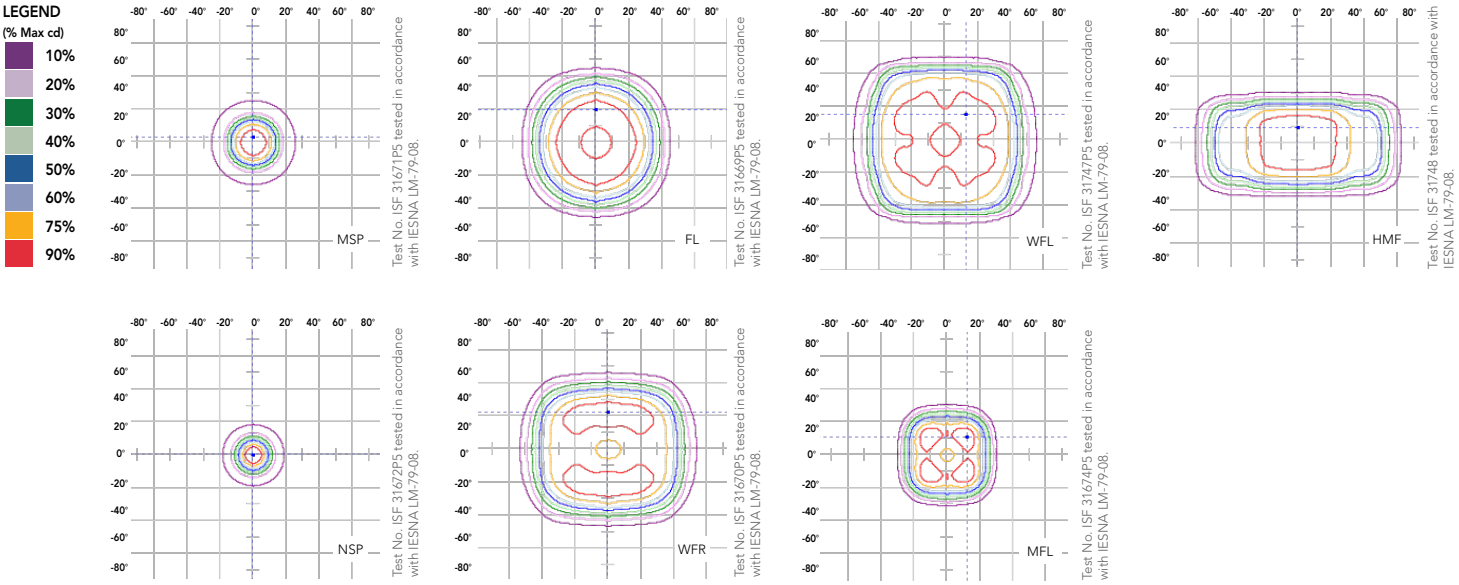

© 2012-2018 Acuity Brands Lighting, Inc. All rights reserved.

Mounting, Options and Accessories

THK - Knuckle with 1/2" NPS threaded pipe

YKC62 - Yoke with SO cord
H= 4-1/4" (10.7 cm)
D= 2-1/4" (5.7 cm)

IS – Integral slipfitter
H= 2-1/2" (6.3 cm)
ID= 2-3/8" (6.0 cm)
OD= 3-1/2" (8.8 cm)

UBV – Upper/bottom visor
W= 5-1/4" (13.3 cm)
H= 2-1/2" (6.3 cm)
D= 3" (7.6 cm)

FV – Full visor
W= 5-1/4" (13.3 cm)
H= 2-1/2" (6.3 cm)
D= 3" (7.6 cm)

VG – Vandal guard
W= 6-1/2" (16.5 cm)
H= 4" (10.1 cm)

FEATURES & SPECIFICATIONS

INTENDED USE
The sleek design of the D-Series Size 1 Flood reflects the embedded high performance LED technology. It is ideal for landscape, signage and accent lighting in many commercial and residential applications.

CONSTRUCTION
Die-cast aluminum housing has integral heat sink fins to optimize thermal management through conductive and convective cooling. The LED driver is mounted in direct contact with the casting to promote low operating temperature and long life. Housing is completely sealed against moisture and environmental contaminants using a tempered glass lens(IP66). Low EPA (0.6 ft^2) for optimized wind loading.

FINISH
Exterior parts are protected by a zinc-infused Super Durable TGIC thermoset powder coat finish that provides superior resistance to corrosion and weathering. A tightly controlled multi-stage process ensures a minimum 3 mils thickness for a finish that can withstand extreme climate changes without cracking or peeling.

OPTICS
A variety of precision-molded vacuum-metallized specular reflectors are engineered for superior target illumination, uniformity and spacing. Light engines are available in 3000K (70 CRI min.), 4000K (70 CRI min.) or 5000K (70 CRI min.) configurations. Optional visors offer additional versatility.

ELECTRICAL
Light engine(s) consist of chip-on-board (COB) LEDs directly coupled to the housing to maximize heat dissipation and promote long life (100,000 hrs, L80). Single-engine unit uses a Class 2 electronic driver; dual-engine unit uses a Class 1 electronic driver. Both drivers have a power factor >90%, THD <20%, and an expected life of 100,000 hours. Standard 6KV surge protection meets a minimum Category C Low operation (per ANSI/IEEE C62.41.2).

INSTALLATION
Integral adjustable knuckle with 1/2-14NPS threaded pipe, tenon slipfitter, or integral slipfitter, facilitates quick and easy installation to a variety of mounting accessories. This secure connection enables the D-Series Size 1 to withstand up to a 1.5 G vibration load rating per ANSI C136.31.

LISTINGS
CSA certified to U.S. and Canadian standards. Luminaire is IP66 rated. Rated for -40°C minimum ambient.

DesignLights Consortium® (DLC) Premium qualified product and DLC qualified product. Not all versions of this product may be DLC Premium qualified or DLC qualified. Please check the DLC Qualified Products List at www.designlights.org/QPL to confirm which versions are qualified.

WARRANTY
5-year limited warranty. Complete warranty terms located at:
www.acuitybrands.com/CustomerResources/Terms_and_conditions.aspx.

Note: Actual performance may differ as a result of end-user environment and application. All values are design or typical values, measured under laboratory conditions at 25 °C. Specifications subject to change without notice.

© 2012-2018 Acuity Brands Lighting, Inc. All rights reserved.

TWH LED
LED Wall Luminaire

Catalog Number

Notes

Type

Hit the Tab key or mouse over the page to see all interactive elements.

Specifications

Width: 16-1/4" *(41.3 cm)*

Height: 15-3/4" *(40.0 cm)*

Depth: 8" *(20.3 cm)*

Weight: 28 lbs *(12.7 kg)*

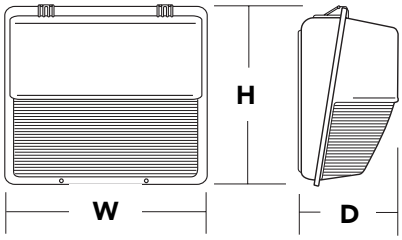

A+ Capable Luminaire

This item is an A+ capable luminaire, which has been designed and tested to provide consistent color appearance and system-level interoperability.

- All configurations of this luminaire meet the Acuity Brands' specification for chromatic consistency
- This luminaire is A+ Certified when ordered with DTL® controls marked by a shaded background. DTL DLL equipped luminaires meet the A+ specification for luminaire to photocontrol interoperability1
- This luminaire is part of an A+ Certified solution for ROAM® or XPoint™ Wireless control networks, providing out-of-the-box control compatibility with simple commissioning, when ordered with drivers and control options marked by a shaded background[1]

To learn more about A+, visit www.acuitybrands.com/aplus.

1. See ordering tree for details.
2. A+ Certified Solutions for ROAM require the order of one ROAM node per luminaire. Sold Separately: Link to Roam; Link to DTL DLL

A+ Capable options indicated by this color background.

Ordering Information

EXAMPLE: TWH LED 30C 1000 50K T3M MVOLT DDBXD

TWH LED								
Series	**LEDs**	**Drive current**	**Color temperature**	**Distribution**	**Voltage**	**Control Options**	**Other Options**	**Finish** *(required)*
TWH LED	10C 10 LEDs (one engine) 20C 20 LEDs (two engines) 30C 30 LEDs (one engine)	1000 1000 mA (1 A)	40K 4000K 50K 5000K	T3M Type III Medium	MVOLT [1] 120 [2] 208 [2] 240 [2] 277 [2] 347 [2,3] 480 [2,3,4]	**Shipped installed** PER NEMA twist-lock receptacle only (no controls) PE Photoelectric cell, button type [2]	**Shipped installed** SF Single fuse (120, 277, 347V) [2] DF Double fuse (208, 240, 480V) [2] TP Tamper proof screws NOM NOM Certified ELSW Emergency battery backup (standard 0°C), non CEC compliant [5,6] ELCW Emergency battery backup (cold weather -20°C), non CEC compliant [5,6] **Shipped separately** VG Vandal guard [7] WG Wire guard [7]	DDBXD Dark bronze DBLXD Black DNAXD Natural aluminum DWHXD White DDBTXD Textured dark bronze DBLBXD Textured black DNATXD Textured natural aluminum DWHGXD Textured white

Stock configurations are offered for shorter lead times:

Standard Part Number	Stock Part Number	CI Codes
TWH LED 10C 1000 40K T3M MVOLT DDBXD	**TWH LED 10C 40K**	***235G4C**
TWH LED 20C 1000 40K T3M MVOLT DDBXD	**TWH LED 20C 40K**	***235G4M**
TWH LED 30C 1000 40K T3M MVOLT DDBXD	**TWH LED 30C 40K**	***235G4T**
TWH LED 10C 1000 50K T3M MVOLT DDBXD	**TWH LED 10C 50K**	***217PLV**
TWH LED 20C 1000 50K T3M MVOLT DDBXD	**TWH LED 20C 50K**	***217PLW**
TWH LED 30C 1000 50K T3M MVOLT DDBXD	**TWH LED 30C 50K**	***217PLX**

Accessories

Ordered and shipped separately.

DLL127F 1.5 JU	Photocell - SSL twist-lock (120-277V) [8]
DLL347 1.5 CUL JU	Photocell - SSL twist-lock (347V) [8]
DLL480 1.5 CUL JU	Photocell - SSL twist-lock (480V) [8]
DSHORT SBK U	Shorting cap [9]
TWHVG U	Vandal guard accessory [10]
TWHWG U	Wire guard accessory [10]

For more control options, visit *DTL* and *ROAM* online.

NOTES

1. MVOLT driver operates on any line voltage from 120-277V (50/60 Hz).
2. Single fuse (SF) requires 120, 277 or 347 voltage option. Double fuse (DF) requires 208, 240 or 480 voltage option.
3. Not available with 10C option.
4. Not available with PE option.
5. Not available with 30C, 347, 480, PER, or SPD.
6. Cannot be used in California. Not qualified under CEC T20 requirements.
7. VG and WG options cannot be installed together. Also available as a separate accessory; see Accessories information at left.
8. Requires luminaire to be specified with PER option. Ordered and shipped as a separate line item.
9. Included when ordering PER.
10. Requires field modification (only when ordered as a separate accessory).

LITHONIA LIGHTING

One Lithonia Way • Conyers, Georgia 30012 • Phone: 800.279.8041 • www.lithonia.com

© 2012-2017 Acuity Brands Lighting, Inc. All rights reserved.

Performance Data

Lumen Output

Lumen values are from photometric tests performed in accordance with IESNA LM-79-08. Data is considered to be representative of the configurations shown, within the tolerances allowed by Lighting Facts. Contact factory for performance data on any configurations not shown here.

LEDs	Drive Current (mA)	Performance Package	System Watts	Dist. Type	40K (4000K, 70 CRI)					50K (5000K, 70 CRI)				
					Lumens	B	U	G	LPW	Lumens	B	U	G	LPW
10C (10 LEDs)	1000	10C 1000 --K	39W	T3M	3,377	0	3	3	87	3,398	0	3	3	87
20C (20 LEDs)	1000	20C 1000 --K	72W	T3M	6,983	1	3	4	97	7,027	1	3	4	97
30C (30 LEDs)	1000	30C 1000 --K	104W	T3M	8,375	1	3	5	81	8,427	1	3	5	81

Lumen Ambient Temperature (LAT) Multipliers

Use these factors to determine relative lumen output for average ambient temperatures from 0-40°C (32-104°F).

Ambient		Lumen Multiplier
0°C	32°F	1.02
10°C	50°F	1.01
20°C	68°F	1.00
25°C	**77°F**	**1.00**
30°C	86°F	1.00
40°C	104°F	0.98

Projected LED Lumen Maintenance

Data references the extrapolated performance projections for the **TWH LED 30C 1000** platform in a **25°C ambient**, based on 10,000 hours of LED testing (tested per IESNA LM-80-08 and projected per IESNA TM-21-11).

To calculate LLF, use the lumen maintenance factor that corresponds to the desired number of operating hours below. For other lumen maintenance values, contact factory.

Operating Hours	0	25,000	50,000	100,000
Lumen Maintenance Factor	1.00	0.97	0.93	0.87

Electrical Load

LEDs	Drive Current (mA)	System Watts	Current (A)					
			120	208	240	277	347	480
10C	1000	39 W	0.36	0.21	0.18	0.16	-	-
20C	1000	72 W	0.67	0.38	0.33	0.29	0.23	0.17
30C	1000	104 W	0.96	0.56	0.48	0.42	0.33	0.24

Options and Accessories

VG - Vandal guard

WG - Wire guard

Photometric Diagrams

To see complete photometric reports or download .ies files for this product, visit Lithonia Lighting's TWP LED homepage.
Tested in accordance with IESNA LM-79 and LM-80 standards

LEGEND

- 0.5 fc
- 1.0 fc
- 2.0 fc

TWH LED 10C 1000 40K T3M MVOLT Mounting height - 10'

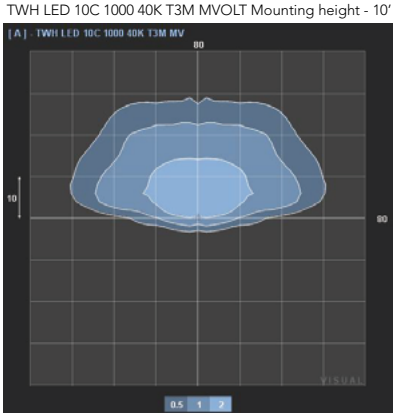

TWH LED 20C 1000 40K T3M MVOLT Mounting height - 10'

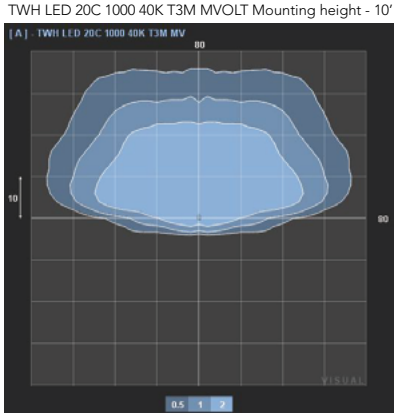

TWH LED 30C 1000 40K T3M MVOLT Mounting height - 10'

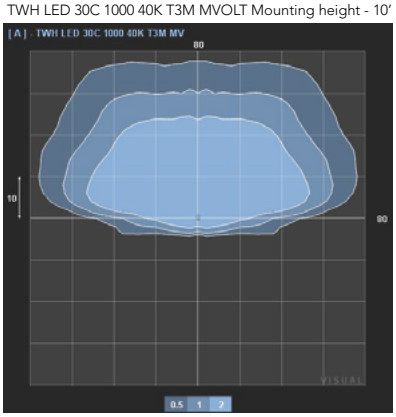

© 2012-2017 Acuity Brands Lighting, Inc. All rights reserved.

FEATURES & SPECIFICATIONS

INTENDED USE
The energy savings, long life and easy-to-install design of the TWH LED make it the smart choice for building-mounted doorway and pathway illumination for nearly any facility.

CONSTRUCTION
Die-cast aluminum housing has an impact-resistant, tempered glass lens that is fully gasketed. Modular design allows for ease of maintenance. The LED driver is mounted to the front casting to thermally isolate it from the light engine for low operating temperature and long life. Housing is completely sealed against moisture and environmental contaminants.

FINISH
Exterior parts are protected by a zinc-infused Super Durable TGIC thermoset powder coat finish that provides superior resistance to corrosion and weathering. A tightly controlled multi-stage process ensures a minimum 3 mils thickness for a finish that can withstand extreme climate changes without cracking or peeling. Available in textured and non-textured finishes.

OPTICS
Protective glass lens covers the light engine's precision-molded proprietary acrylic lenses. Light engines are available in 4000K and 5000K configurations.

ELECTRICAL
Light engine(s) consist of 10 or 30 high-efficacy LEDs mounted to a metal-core circuit board and integral aluminum heat sink to maximize heat dissipation and promote long life (L87/100,000 hrs at 25°C). The electronic driver has a power factor of >90%, THD <20%, and a minimum 2.5 KV surge rating. When ordering the SPD option, a separate surge protection device is installed within the luminaire which meets a minimum Category C low operation (per ANSI/IEEE C62.41.2).

INSTALLATION
Back housing is separated from front housing, eliminating ballast weight and promoting easy handling. Top 3/4" threaded wiring access. Back access through removable 3/4" knockout. Feed-thru wiring can be achieved by using a condulet tee. Mount on any vertical surface. Not recommended in applications where a sprayed stream of water can come in direct contact with glass lens.

LISTINGS
UL listed for wet locations. Rated for -40°C minimum ambient. Luminaire is IP55 rated.

WARRANTY
5-year limited warranty. Complete warranty terms located at www.acuitybrands.com/CustomerResources/Terms_and_conditions.aspx.

Note: Actual performance may differ as a result of end-user environment and application. All values are design or typical values, measured under laboratory conditions at 25°C. Specifications subject to change without notice.

© 2012-2017 Acuity Brands Lighting, Inc. All rights reserved.

RBI SOLAR

Ground Mount Solutions

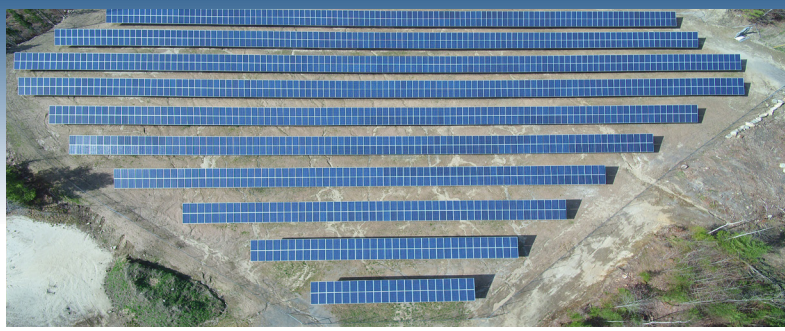

Driven | Ballasted

DESIGN • ENGINEERING • MANUFACTURING • INSTALLATION

RBI SOLAR

Complete Single-Source Solutions

RBI Solar's ground mount solar systems are designed and engineered for each customer's site specific conditions to minimize the field installation labor by eliminating field welding, drilling, or other on-site fabrication. Our meticulous project planning and precise execution combine to provide you with solar racking solutions that are tailored to the unique conditions of your location while reducing your overall total project costs. RBI provides a wide range of PV mounting systems in various sizes to offer freedom and flexibility to support every type of PV module.

Why choose RBI Solar?

- Single-source solutions aide in reduction of overall total project costs
- Streamlined production process
- Wider selection of component parts
- Higher strength steel with corrosion protection
- Uses less steel without sacrificing strength
- Pre-assembled components available
- Quick response & efficient communication
- Follow contours to mitigate civil/site work
- Nationwide installation services
- ETL Classified to UL Standard 2703
- 20-yr limited warranty
- 85+ years manufacturing experience & bankable financial backing

Ground Mount Solutions

- Customizable, site-specific solutions
- Multiple foundations available
- ETL classified to UL Standard 2703

Ballasted Mounting Solutions

- Two ballast foundation offerings
- Perfect for landfills, brownfields and non-penetrable sites

Design & Engineering

- Licensed in-house engineers
- Structural and foundation design
- Stamped drawings, including foundations
- Code compliance
- On-site pile testing

Manufacturing

- Multiple manufacturing facilities
- National & International capabilities
- ARRA compliant availability

Installation

- Dedicated Project & Construction Managers
- Highly skilled & specialized installation crews
- Company-owned post driving equipment

Our Job is to Make Yours Easier

Single-Source Provider

DESIGN

RBI Solar's in-house designers provides complete structural and foundation design. It is our focus to deliver the most effective and efficient racking solution for each project's site specific conditions.

ENGINEERING

Our licensed in-house engineers incorporate and analyze data from certified geotechnical reports, on-site pile testing and all applicable codes/loading considerations when designing each individual project.

MANUFACTURING

Having multiple state-of-the-art manufacturing facilities with vertical integration and refined manufacturing protocol, ensure RBI Solar delivers on overall quality of product with reduced lead times for material delivery to job sites.

INSTALLATION

RBI Solar provides single-source responsibility with in-house project management and a network of installation crews. Overall project coordination allows RBI Solar to focus on delivering projects on time and within budget.

Solar Racking Solutions
from the Industry's Most Trusted Team

Contact us at info@rbisolar.com or (513) 242-2051

www.rbisolar.com

RBI SOLAR

100/125kW, 1500Vdc String Inverters for North America

CPS SCH100/125KTL-DO/US-600

The 100 & 125kW medium power CPS three phase string inverters are designed for ground mount applications. The units are high performance, advanced and reliable inverters designed specifically for the North American environment and grid. High efficiency at 98.8% peak and 98.5% CEC, wide operating voltages, broad temperature ranges and a NEMA Type 4X enclosure enable this inverter platform to operate at high performance across many applications. The CPS 100/125kW products ship with the standard wire-box, each fully integrated and separable with touch safe fusing, monitoring, and AC and DC disconnect switches. The CPS Flex Gateway enables communication, controls and remote product upgrades.

Key Features

- NEC 2014/17 compliant & UL listed Arc-Fault circuit protection
- Touch safe DC Fuse holders adds convenience and safety
- CPS Flex Gateway enables remote FW upgrades
- Integrated AC & DC disconnect switches
- 1 MPPT with 16 and 20 inputs for maximum flexibility
- Copper and Aluminum compatible AC connections
- NEMA Type 4X outdoor rated, tough tested enclosure
- Advanced Smart-Grid features (CA Rule 21 compatible)
- kVA Headroom to deliver full Active Power @ 0.95PF
- Generous 1.5 DC/AC Inverter Load Ratio
- Separable wire-box design for fast service
- Standard 10 year warranty with extensions to 20 years

100/125kW Standard Wire-box

100/125kW Centralized Wire-box

Intertek
4004522
Conforms to UL Std. 1741
Cert.to CSA Std.C22.2 No.107.1-01

This device complies with part 15 of the FCC Rules

© CHINT POWER 2018/01-MKT NA

Chint Power Systems America
7060 Koll Center Parkway, Suite 318 Pleasanton, CA 94566
Tel: 855-584-7168 Mail: AmericaSales@chintpower.com Web: www.chintpowersystems.com

Model Name	CPS SCA100KTL-DO/US-600	CPS SCA125KTL-DO/US-600
DC Input		
Max. PV Power	150kW	187.5kW
Max. DC Input Voltage	1500V	
Operating DC Input Voltage Range	860-1450Vdc	
Start-up DC Input Voltage / Power	900V / 250W	
Number of MPP Trackers	1	
MPPT Voltage Range	870-1300Vdc	
Max. PV Input Current (Isc x1.25)	220A	275A
Number of DC Inputs	16 inputs / per MPPT	20 inputs / per MPPT
DC Disconnection Type	Load rated DC switch	
DC Surge Protection	Type II MOV, Up=2.5kV , In=20kA(8/20us)	
AC Output		
Rated AC Output Power	100kW	125kW
Max. AC Output Power[1]	100kVA (111KVA @ PF>0.9)	125kVA (132KVA @ PF>0.95)
Rated Output Voltage	600Vac	
Output Voltage Range[2]	528-660Vac	
Grid Connection Type[3]	3Φ / PE / (N optional) Wye or Delta	
Nominal AC Output Current @600Vac	106.9A	127.2A
Rated Output Frequency	60Hz	
Output Frequency Range[2]	57-63Hz	
Power Factor	>0.99 (±0.8 adjustable)	>0.99 (±0.8 adjustable)
Current THD	<3%	
AC Disconnection Type	Load rated AC switch	
AC Surge Protection	Type II MOV, Up=2.5kV , In=20kA(8/20us)	
System		
Topology	Transformerless	
Max. Efficiency	98.8%	
CEC Efficiency	98.5%	
Stand-by / Night Consumption	<2W	
Environment		
Enclosure Protection Degree	NEMA Type 4X	
Cooling Method	Variable speed cooling fans	
Operating Temperature Range	-22°F to +140°F / -30°C to +60°C (derating from +113°F / +45°C)	
Non-Operating Temperature Range[4]	-40°F to +158°F / -40°C to +70°C maximum[4]	
Operating Humidity	0-95%, non-condensing	
Operating Altitude	8202ft / 2500mm (no derating)	
Audible Noise	<65dBA@1m and 25°C	
Display and Communication		
User Interface and Display	LED, WiFi + APP	
Inverter Monitoring	Modbus RS485, PLC Option	
Site Level Monitoring	CPS Flex Gateway (1 per 32 inverters)	
Modbus Data Mapping	SunSpec/CPS	
Remote Diagnostics/FW Upgrade Functions	Standard	
Mechanical		
Dimensions (WxHxD)	45.28x24.25x9.84in (1150x616x250mm) with Standard Wire-box 39.37x24.25x9.84in (1000x616x250mm) with Centralized Wire-box	
Weight	Inverter: 121lbs / 55kg; Wire-box: 55lbs / 25kg (standard); 33lbs / 15kg (centralized)	
Mounting/Installation Angle	15 - 90 degrees from horizontal (vertical, angled)	
AC Termination[5]	M8 Stud Type Terminal Block (Wire range: #6 - 3/0AWG CU/AL[5], Lugs not supplied)	
DC Termination	Screw Clamp Fuse Holder (Wire range: 14AWG - 10AWG CU) - Standard Wire-box Screw Clamp Fuse Holder (Wire range: 1AWG - 250kcmil CU/AL, Lugs not supplied) - Centralized Wire-box	
Fused String Inputs (5 per MPPT)	15A fuses provided (Fuse values up to 30A acceptable)	
Safety		
Safety and EMC Standard	UL1741SA-2016[6], UL1699B, CSA-C22.2 NO.107.1-01, IEEE1547a-2014; FCC PART15	
Grid Standard[6]	IEEE 1547a-2014, CA Rule 21[6]	
Smart-Grid Features	Voltage-RideThru, Frequency-RideThru, Soft-Start, Volt-Var, Frequency-Watt	
Warranty		
Standard	10 years	
Extended Terms	15 and 20 years	

1) "Max. AC Apparent Power" rating valid within MPPT voltage range and temperature range of -30°C to +40°C (-22°F to +104°F) for 100KW PF ≥0.9 and 125KW PF ≥0.95
2) The "Output Voltage Range" and "Output Frequency Range" may differ according to the specific grid standard.
3) Wye neutral-grounded, Delta may not be corner-grounded.
4) See user manual for further requirements regarding non-operating conditions.
5) AL requires bi-metallic compression lug or bi-metallic adapter.
6) Certifications Pending.

powered by Q.ANTUM

Q.PLUS L-G4.2 340-355

Q.ANTUM SOLAR MODULE

The Q.ANTUM solar module Q.PLUS L-G4.2 with power classes up to 355 Wp is the strongest module of its type on the market globally. Powered by 72 Q CELLS solar cells Q.PLUS L-G4.2 was specially designed for large solar power plants to reduce BOS costs. Only Q CELLS offers German engineering quality with our unique triple Yield Security.

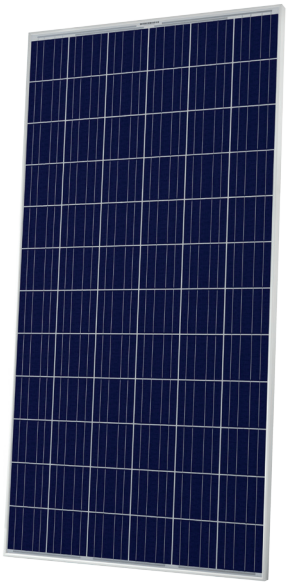

LOW ELECTRICITY GENERATION COSTS

Higher yield per surface area and lower BOS costs thanks to higher power classes and an efficiency rate of up to 18.1 %.

INNOVATIVE ALL-WEATHER TECHNOLOGY

Optimal yields, whatever the weather with excellent low-light and temperature behavior.

ENDURING HIGH PERFORMANCE

Long-term yield security with Anti-PID Technology[1], Hot-Spot-Protect and Traceable Quality Tra.Q™.

EXTREME WEATHER RATING

High-tech aluminum alloy frame, certified for high snow (5400 Pa) and wind loads (2400 Pa).

A RELIABLE INVESTMENT

Inclusive 12-year product warranty and 25-year linear performance guarantee[2].

EUPD RESEARCH TOP BRAND PV MODULES EUROPE 2017

Q CELLS YIELD SECURITY
- ANTI PID TECHNOLOGY (APT)
- HOT-SPOT PROTECT (HSP)
- TRACEABLE QUALITY (TRA.Q™)

Photon Q CELLS Best polycrystalline solar module 2014 Q.PRO-G2 235 174 modules tested

[1] APT test conditions: Cells at -1500 V against grounded, with conductive metal foil covered module surface, 25 °C, 168 h

[2] See data sheet on rear for further information.

THE IDEAL SOLUTION FOR:

Ground-mounted solar power plants

Engineered in **Germany**

Q CELLS

MECHANICAL SPECIFICATION

Format	78.5 in × 39.4 in × 1.38 in (including frame) (1994 mm × 1000 mm × 35 mm)
Weight	52.9 lbs (24 kg)
Front Cover	0.13 in (3.2 mm) thermally pre-stressed glass with anti-reflection technology
Back Cover	Composite film
Frame	Anodized aluminum
Cell	6 × 12 Q.ANTUM solar cells
Junction box	3.35-4.53 in × 2.36-3.15 in × 0.59-0.75 in (85-115 × 60-80 × 15-19 mm), Protection class ≥ IP67, with bypass diodes
Cable	4 mm² Solar cable; (+) ≥ 47.24 in (1200 mm), (-) ≥ 47.24 in (1200 mm)
Connector	MC4 or MC4-EVO 2, IP65 and IP68

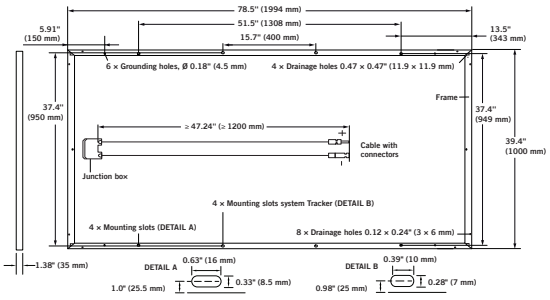

ELECTRICAL CHARACTERISTICS

POWER CLASS				340	345	350	355
MINIMUM PERFORMANCE AT STANDARD TEST CONDITIONS, STC[1] (POWER TOLERANCE +5 W / -0 W)							
Minimum	Power at MPP[2]	P_{MPP}	[W]	340	345	350	355
	Short Circuit Current*	I_{SC}	[A]	9.59	9.64	9.69	9.74
	Open Circuit Voltage*	V_{OC}	[V]	47.07	47.46	47.71	47.97
	Current at MPP*	I_{MPP}	[A]	9.03	9.09	9.15	9.21
	Voltage at MPP*	V_{MPP}	[V]	37.63	37.93	38.23	38.52
	Efficiency[2]	η	[%]	≥17.1	≥17.3	≥17.6	≥17.8
MINIMUM PERFORMANCE AT NORMAL OPERATING CONDITIONS, NOC[3]							
Minimum	Power at MPP[2]	P_{MPP}	[W]	252.1	255.8	259.5	263.2
	Short Circuit Current*	I_{SC}	[A]	7.73	7.77	7.81	7.85
	Open Circuit Voltage*	V_{OC}	[V]	43.92	44.29	44.53	44.77
	Current at MPP*	I_{MPP}	[A]	7.09	7.14	7.19	7.24
	Voltage at MPP*	V_{MPP}	[V]	35.56	35.83	36.10	36.36

[1] 1000 W/m², 25 °C, spectrum AM 1.5 G [2] Measurement tolerances STC ±3%; NOC ±5% [3] 800 W/m², NOCT, spectrum AM 1.5 G * typical values, actual values may differ

Q CELLS PERFORMANCE WARRANTY

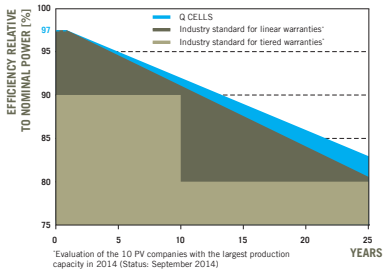

At least 97 % of nominal power during first year. Thereafter max. 0.6 % degradation per year.
At least 92 % of nominal power up to 10 years.
At least 83 % of nominal power up to 25 years.

All data within measurement tolerances. Full warranties in accordance with the warranty terms of the Q CELLS sales organization of your respective country.

PERFORMANCE AT LOW IRRADIANCE

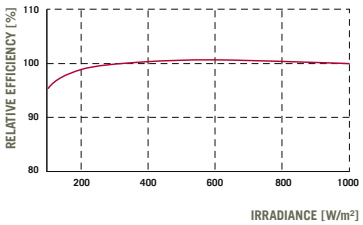

Typical module performance under low irradiance conditions in comparison to STC conditions (25 °C, 1000 W/m²).

TEMPERATURE COEFFICIENTS

Temperature Coefficient of I_{SC}	α	[%/K]	+0.04	**Temperature Coefficient of V_{OC}**	β	[%/K]	−0.29
Temperature Coefficient of P_{MPP}	γ	[%/K]	−0.40	**Normal Operating Cell Temperature**	NOCT	[°F]	113 ± 5.4 (45 ± 3 °C)

PROPERTIES FOR SYSTEM DESIGN

Maximum System Voltage V_{SYS}	[V]	1500 (IEC) / 1500 (UL)	**Safety Class**	II
Maximum Series Fuse Rating	[A DC]	20	**Fire Rating**	C (IEC) / TYPE 1 (UL)
Design load, push (UL)[2]	[lbs/ft²]	75 (3600 Pa)	**Permitted module temperature on continuous duty**	-40 °F up to +185 °F (-40 °C up to +85 °C)
Design load, pull (UL)[2]	[lbs/ft²]	33 (1600 Pa)	[2] safety factor of 1.5 included, see installation manual	

QUALIFICATIONS AND CERTIFICATES

IEC 61215 (Ed. 2); IEC 61730 (Ed. 1), Application class A

C Certified US
UL 1703
(254141)

PACKAGING INFORMATION

Number of Modules per Pallet	29
Number of Pallets per 53' Container	26
Number of Pallets per 40' Container	22
Pallet Dimensions (L × W × H)	81.3 × 45.3 × 46.9 in (2065 × 1150 × 1190 mm)
Pallet Weight	1671 lbs (758 kg)

NOTE: Installation instructions must be followed. See the installation and operating manual or contact our technical service department for further information on approved installation and use of this product.

Hanwha Q CELLS America Inc.
300 Spectrum Center Drive, Suite 1250, Irvine, CA 92618, USA | **TEL** +1 949 748 59 96 | **EMAIL** inquiry@us.q-cells.com | **WEB** www.q-cells.us

Engineered in **Germany**

Specifications subject to technical changes © **Hanwha Q CELLS** Q.PLUS L-G4.2_340-355_2017-05_Rev01_NA

Tunstall®

Established 1958

Float & Thermostatic Steam Traps

Series TA-FT

Operation

Tunstall Associates, Inc. produces a full line of Float & Thermostatic Steam Traps containing a float valve mechanism which modulates to discharge condensate continuously, while non-condensable gases are released by a separate internal balanced pressure thermostatic air vent (The Tunstall Capsule®).

The "H" pattern body on all ¾", 1" (15, 30, 75 & 125 psig) and 1-1/4" (15 & 30 psig) has been designed to offer maximum installation flexibility.

For larger sizes 1-1/2", 2" (15, 30, 75 & 125 psig) and 1-1/4" (75 & 125 psig), the inlet and outlet taps are located in the cover. This design allows for higher capacities and direct retrofits for older piping systems. All Tunstall float and thermostatic traps can be serviced without disturbing system piping.

Features

- Variety of piping connections.
- Stainless steel balanced pressure thermostatic air vent (Tunstall Capsule®).
- All stainless steel internal components
- Wide selection ¾"-2" @ 15, 30 , 75 & 125 psig differential pressures.
- Designed to withstand water hammer & high load demands.
- Designed for In-line repair.
- Made in the U.S.A.

Construction

Tunstall float and thermostatic traps feature all stainless steel interiors, heavy duty trap housings, easy access to internal parts and convenient piping connections.

Materials of Construction	
Body & Cover	Cast Iron-ASTMA 126CI B
Valve Head	Stainless Steel
Valve Seat	Stainless Steel
Valve Seat Gasket	Stainless Steel
Float	Stainless Steel
Bracket & Lever Assembly	Stainless Steel
Thermostatic Air Vent	Tunstall Capsule® Stainless Steel
Cover Bolts	Carbon Steel Grade 5
Cover Gasket	Non-Asbestos
Draining Plug	Stainless Steel

Tunstall Associates, Inc.
118 Exchange Street · Chicopee, MA 01013

Tunstall

Phone (413) 594-8695 · Fax (413) 598-8109
www.tunstall-inc.com

FLOAT & THERMOSTATIC STEAM TRAPS SERIES "TA-FT"

Engineering Specifications

CAPACITIES*

lbs. Condensate per hour

Model	Size NPT	PSIG Orifice	DIFFERENTIAL PRESSURE (PSI) 1/4	1/2	1	2	5	10	15	20	25	30	40	50	75	100	125
TA-FT3-15	¾"	.218	279	369	489	650	785	1000	1075								
TA-FT4-15	1"	.218	279	369	489	650	785	1000	1075								
TA-FT5-15	1¼"	.312	600	770	980	1240	1640	2000	2340								
TA-FT6-15	1½"	.500	1100	1700	2400	3300	5000	6600	7600								
TA-FT5-15	2"	.625	2300	2800	3600	4650	6900	9000	10900								
TA-FT3-30	¾"	.218	279	369	489	650	785	1000	1075	1210	1300	1370					
TA-FT4-30	1	.218	279	369	489	650	785	1000	1075	1210	1300	1370					
TA-FT5-30	1¼"	.228	375	500	690	910	1200	1500	1680	1800	1900	2000					
TA-FT6-30	1½"	.390	1000	1300	1700	2300	3400	4600	5500	6000	6600	7000					
TA-FT8-30	2"	.500	1300	1800	2500	3400	5200	6800	7800	8600	9300	10000					
TA-FT3-75	¾"	.166	160	213	280	365	520	700	795	875	930	970	1120	1230	1450		
TA-FT4-75	1	.166	160	213	280	365	520	700	795	875	930	970	1120	1230	1450		
TA-FT5-75	1¼"	.312	550	725	960	1300	1900	2650	3050	3400	3700	4000	4400	4750	5400		
TA-FT6-75	1½"	.312	550	725	960	1300	1900	2650	3050	3400	3700	4000	4400	4750	5400		
TA-FT8-75	2"	.421	850	1100	1500	2000	3100	4150	4750	5200	5500	5800	6400	6800	7700		
TA-FT3-125	¾"	.125	100	135	175	230	330	415	500	585	620	685	750	830	970	1110	1190
TA-FT4-125	1	.125	100	135	175	230	330	415	500	585	620	685	750	830	970	1110	1190
TA-FT5-125	1¼"	.246	400	520	680	890	1300	1700	2050	2300	2500	2700	3000	3200	3800	4200	4500
TA-FT6-125	1½"	.246	400	520	680	890	1300	1700	2050	2300	2500	2700	3000	3200	3800	4200	4500
TA-FT8-125	2"	.332	550	375	880	1225	1950	2600	3000	3250	3500	3800	4200	4600	5500	6100	6600

All ¾", 1", 1¼", TA-FT-15, TA-FT-30

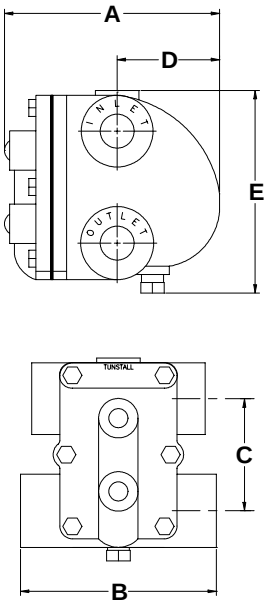

All 1½", 2", 1¼", TA-FT-75, TA-FT-125

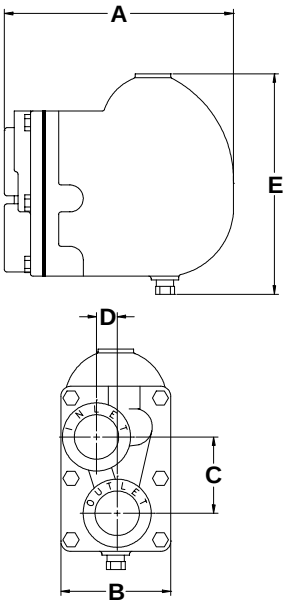

Model	Size	DIMENSIONS (Inches) A	B	C	D	E	Weight (lbs)
TA-FT3-15	¾"	6.25	5.50	3.31	3.00	5.75	9
TA-FT4-15	1"	6.25	5.50	3.31	3.00	5.75	9
TA-FT5-15	1¼"	6.25	5.75	3.00	3.81	5.75	9½
TA-FT6-15	1½"	8.50	4.25	3.00	0.70	8.40	18
TA-FT8-15	2"	9.81	4.94	4.94	0.12	9.12	26
TA-FT3-30	¾"	6.25	5.50	3.31	3.00	5.75	9
TA-FT4-30	1"	6.25	5.50	3.31	3.00	5.75	9
TA-FT5-30	1¼"	6.25	5.75	3.00	3.81	5.75	9½
TA-FT6-30	1½"	8.50	4.25	3.00	0.70	8.40	18
TA-FT8-30	2"	9.81	4.94	4.94	0.12	9.12	26
TA-FT3-75	¾"	6.25	5.50	3.31	3.00	5.75	9
TA-FT4-75	1"	6.25	5.50	3.31	3.00	5.75	9
TA-FT5-75	1¼"	8.50	4.25	3.00	0.70	8.40	18
TA-FT6-75	1½"	8.50	4.25	3.00	0.70	8.40	18
TA-FT8-75	2"	9.81	4.94	4.94	0.12	9.12	26
TA-FT3-125	¾"	6.25	5.50	3.31	3.00	5.75	9
TA-FT4-125	1"	6.25	5.50	3.31	3.00	5.75	9
TA-FT5-125	1¼"	8.50	4.25	3.00	0.70	8.40	18
TA-FT6-125	1½"	8.50	4.25	3.00	0.70	8.40	18
TA-FT8-125	2"	9.81	4.94	4.94	0.12	9.12	26

Tunstall Associates, Inc.
118 Exchange Street · Chicopee, MA 01013

Phone (413) 594-8695 · Fax (413) 598-8109
www.tunstall-inc.com

Tunstall Assoc., Inc. Reserves the right to change the design and/or materials of its products without notice.

Tunstall®

Established 1958

Inverted Bucket Steam Traps

Series TA-IB (Models 8080 & 8181)

Operation

Tunstall Associates, Inc. produces a full line of Inverted Bucket Steam Traps containing a stainless steel bucket and valve mechanism which are either in a full closed position, or a full open position to discharge condensate.

As the system starts, air and non-condensable gases vent through the orifice in the bucket; condensate also enters through the standpipe which forms a water seal in the bottom of the bucket. As steam enters the trap a simple lever mechanism attached to the inverted bucket snaps shut; then as the steam condenses the buoyancy of the bucket changes thus opening the lever mechanism, and allowing pressure to force the condensate out of the trap. This process repeats itself exactly and continuously to maximize the efficient use of energy. No cooling leg required. Refer to capacity charts when ordering.

Features

- In-Line Connection
- High Strength Cast Iron Body
- Hardened Stainless Steel Valve & Seat
- Stainless Steel Bucket
- Test Plug
- Low Maintenance

Applications

- Converters
- Dryers
- High-Pressure Drip
- Laundry Equipment
- Oil Preheaters
- Pressing Machinery
- Process Equipment
- Steam Cookers
- Steam Heated Vats
- Unit Heaters

Materials of Construction	
Body & Cover	Cast Iron-ASTM-A-126-7/Class B
Bucket & Linkage	Stainless Steel
Valve & Seat	Hardened Stainless Steel
Standpipe	Steel Pipe
Cover Gasket	Non-Asbestos

Model 8080

Max. Operating Pressure: 150 PSIG
Max. Allowable Temperature: 366°F

Model 8181

Max. Operating Pressure: 250 PSIG
Max. Allowable Temperature: 450°F

Tunstall Associates, Inc.
118 Exchange Street · Chicopee, MA 01013

Phone (413) 594-8695 · Fax (413) 598-8109
www.tunstall-inc.com

© December 2003

INVERTED BUCKET STEAM TRAPS SERIES "TA-IB"

Engineering Specifications

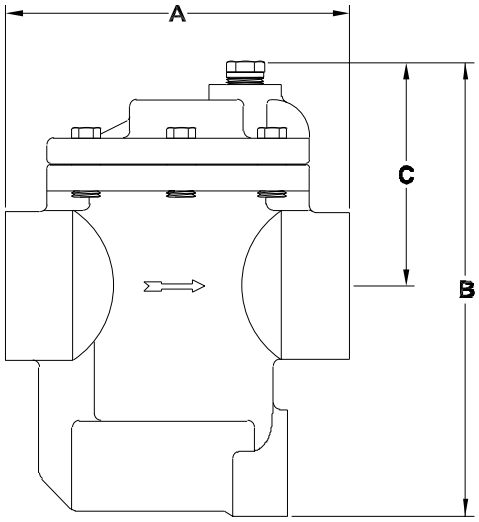

Model 8080

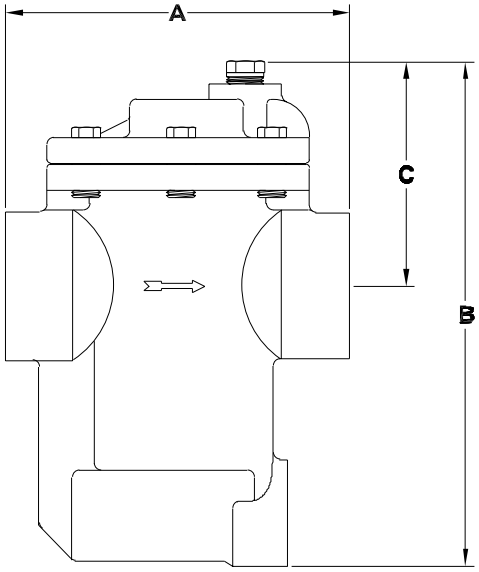

Model 8181

Capacity Chart (8080)

Differential Pressure PSI	Orifice Size (In.)	Model 8080
1/4		139
1/2		200
3/4		240
1		270
2		340
3		390
4		425
5		450
10		560
15		640
20	3/16	690
25		460
30		500
40		550
50		580
60		635
70		660
80	1/8	690
100		500
125		550
150	#38	570
180		--
200		--
225		--
250		--

Capacity Chart (8181)

Differential Pressure PSI	Orifice Size (In.)	Model 8181
1/4		191
1/2		300
3/4		395
1		450
2		590
3		680
4		750
5		830
10		950
15	1/4	1060
20		585
25		655
30		710
40		770
50		840
60		900
70	5/32	950
80		800
100		860
125	1/8	950
150		660
180		670
200		700
225		730
250	#38	760

Capacities given are in pounds of hot condensate per hour at differential indicated.

Weights and Dimensions

Model Number	Size (in.) NPT	Weight (lbs.)	Dimensions A	B	C
8080	1/2	5	5.000	5.875	3.125
8080	3/4	5	5.000	5.875	3.125
8181	1/2	6	5.000	6.875	2.625
8181	3/4	6	5.000	6.875	2.625
8181	1	6	5.000	6.875	2.625

Tunstall Associates, Inc.
118 Exchange Street · Chicopee, MA 01013

Phone (413) 594-8695 · Fax (413) 598-8109
www.tunstall-inc.com

Tunstall Assoc., Inc. Reserves the right to change the design and/or materials of its products without notice.

Tunstall®

Established 1958

Thermal-Disc™ Steam Traps
Series TA-TD

Operation

Tunstall Corporation produces a full line of Thermal-Disc™ Steam Traps. Available in 3/8", 1/2", 3/4" and 1" NPT connections, all the internal parts are stainless steel for long service life.

The Tunstall Thermal-Disc™ operates using Bernoulli's Theorem; as condensate enters the Thermal-Disc™ Trap, it lifts the thermal disc and discharges through outlet ports. Multiple outlet ports assure that the lift of the disc is parallel to the seat for efficient operation. Once the condensate reaches its flash point, the pressure on the top of the disc increases, due to higher velocity steam, causing the disc to snap closed. As the steam above the disc condenses, pressure above the disc will lower, and allow the disc to lift again and repeat the process.

Features

- In-Line Connection
- Compact Size
- High Strength Stainless Steel Construction
- Low Maintenance (Only one moving part)
- Can be installed Vertically for "Freeze Proof" installation

Applications

- Steam Main Drainage
- High Pressure Drips
- Tracer Lines
- Process Equipment
- Laundry Equipment
- Kitchen Equipment
- Superheated Steam applications
- Outdoor installations subject to freezing

Materials of Construction	
Body	Stainless Steel AISI 420F
Cap	Stainless Steel AISI 416
Disc	Stainless Steel AISI 420

Tunstall®

Tunstall Corporation
118 Exchange Street · Chicopee, MA 01013

Phone (413) 594-8695 · Fax (413) 598-8109
www.maconbalancing.com

© August 2014
We reserve the right to alter designs, specifications and information without notice.

Engineering Specifications

Installation

Valve installation is typically in the horizontal position as close to the equipment being drained as possible. A 20 mesh strainer is recommended upstream of the trap as is an isolation valve. Piping to and from the trap should be equal to the trap connection (one size larger is acceptable). Body material is not suitable for welding.

Freeze proof installation is achieved by installing the trap vertically, discharging downward. All drains must be pitched towards the trap. Discharge piping must be self-draining.

Pressure / Temperature Rating

PMA - Max. Allowable Pressure: 600 psi
TMA - Max. Allowable Temperature: 800º F
PMO - Max. Operating Pressure: 600 psi
TMO - Max. Operating Temperature: 800º F

Capacities - lbs. of condensate/hr

Inlet (psig)	TA-TD-38	TA-TD-50	TA-TD-75	TA-TD-100
3.5	180	300	415	650
5	185	315	430	680
10	190	350	475	740
15	195	380	520	815
20	200	415	565	885
25	215	440	610	940
30	220	470	650	1000
40	230	515	720	1080
50	250	580	825	1225
75	310	710	1020	1500
100	375	825	1185	1800
150	500	1020	1480	2215
200	620	1165	1710	2625
250	710	1300	1950	2935
300	800	1440	2110	3300
350	825	1565	2265	3600
400	900	1670	2490	3875
450	1070	1775	2625	4120
500	1120	1880	2780	4350
550	1185	1960	2985	4560
600	1290	2060	3140	4840

NOTE: Max. back pressure should not exceed 80% of the inlet pressure under any conditions of operation, otherwise the trap may not shut.

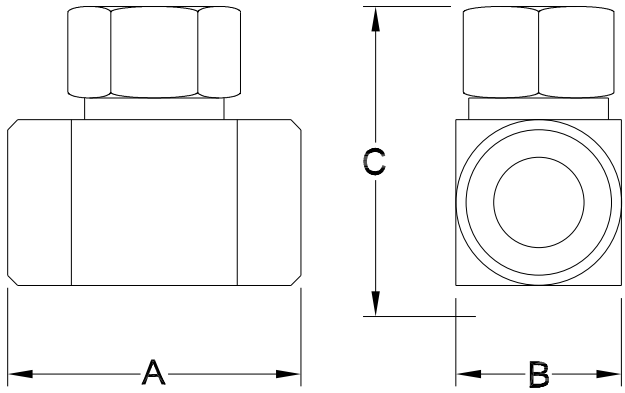

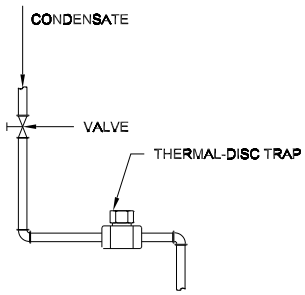

TYPICAL INSTALLATION

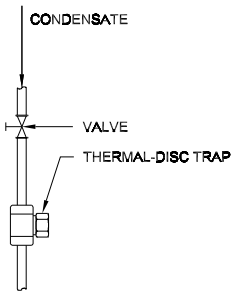

FREEZE-PROOF INSTALLATION

Dimensions and Weights						Repair Kit
Model	Size	A	B	C	Weight	
TA-TD-38	3/8”	1-3/8	2	1-11/16	0.75	TA-TD-DISC-38
TA-TD-50	1/2”	1-1/2	2-11/16	2	1.25	TA-TD-DISC-50
TA-TD-75	3/4”	1-3/4	2-13-16	2-3/8	2.00	TA-TD-DISC-75
TA-TD-100	1”	2-1/8	3-3/16	2-13/16	3.00	TA-TD-DISC-100

Note: Dimensions in inches & Weights in pounds

Tunstall Corporation
118 Exchange Street · Chicopee, MA 01013
Phone (413) 594-8695 · Fax (413) 598-8109
www.maconbalancing.com
© August 2014
We reserve the right to alter designs, specifications and information without notice.

Tunstall Steam Trap Capsules®

Submittal Data

Project:

Engineer:

Contractor:

Representative/Supplier:

Post & Spring Style

Thread Type

Installation Tool

Features:

- 100% Stainless Steel Thermostatic Capsule, TIG Welded Construction
- Stainless Steel Spring (If Required)
- Stainless Steel Seat
- Stainless Steel Bellows
- EPDM Gasket Rated to 300°F (Saturated Steam)
- 24 Month Warranty

Specifications

Spring Type

For low pressure steam radiator traps vacuum to 45 psig. Stainless steel bellows with corrosion resistant stainless steel plug and seat. All parts calibrated inside a heavy duty stainless steel capsule (housing) with a stainless steel spring inserted on a stainless steel post at the top of capsule (housing). The seat projection to be unthreaded to facilitate easy installation where the orifice in the trap body has no threads.

Thread Type

For low pressure steam radiator traps vacuum to 45 psig. Stainless steel bellows with corrosion resistant stainless steel plug and seat. All parts calibrated inside a heavy duty stainless steel capsule (housing). The seat projection to be threaded to facilitate easy installation where the orifice in the trap body is threaded. TC Tool to be provided for ease of installation.

New steam trap covers may be necessary to facilitate the capsule installation and will be provided as required.

Tunstall

118 Exchange Street • Chicopee, MA 01013
www.tunstall-inc.com

Phone (413) 594-8695 • Fax (413) 598-8109
www.maconcontrols.com

Barnes & Jones® INC. Float & Thermostatic Steam Traps Series 2000 (VAC-30 PSIG)

Features

- Variety of hook-up combinations
- Unaffected by sudden or wide pressure changes
- Responds quickly to condensate load changes
- Continuous discharge
- Condensate discharge temperature closely follows the saturated steam curve
- Function is not impaired by high back pressure
- Energy efficient
- Simple construction
- On-line repair

Description

The Barnes & Jones float and thermostatic traps, Series 2000 are designed for all types of low pressure or vacuum steam heating systems and steam process equipment. Typical applications include; unit heaters, space heaters, water heaters, pressing machines and low pressure mains and risers.

Float and thermostatic traps are specially well suited for apartments, hospitals, office buildings and schools or wherever quiet operation is necessary.

Operation

The opening and closing of the valve is caused by changes of the condensate level within the trap shell.

When the water level drops, the weight of the float closes the valve. As condensate enters the traps, the float rises and opens the valve, allowing condensate to be discharged. The float is designed to provide sufficient buoyancy to overcome the differential pressure across the valve. The internal float and valve configuration is such that the condensate level is always above the valve, creating a continuous water seal at the seat.

Air and other gasses are freely discharged as they reach the trap through the air vent. The calibrated thermostat will close the air vent immediately when the temperature surrounding the element reaches saturated steam temperature.

MATERIALS

Part	Description
Head	Cast Iron, ASTM-A278 Class 30
Body	Cast Iron, ASTM-A278 Class 30
Bolting	Steel, Grade 5
Gaskets	Non-Asbestos Fiber
Float	Stainless Steel
Plug	Stainless Steel
Seat	Brass, 15#; Stainless Steel, 30#

Construction

Barnes & Jones float and thermostatic traps are compact, of rugged design, with easy access to all interior parts. The body is cast with two inlet and two outlet pipe connections that permit four combinations of pipe hook-ups for all types of applications.* All working parts are made of corrosion resistant materials and attached to the cover casting. The repair kit consists of a complete, factory assembled head which simply bolts on for ease of repair.* No pipe connections need to be broken.

*except the 2" model which is piped through the head.

91 Pacella Park Drive • Randolph, MA 02368 • TEL 781-963-8000 * FAX 781-963-3322

Engineering Specifications

CAPACITIES (SHEMA)

lbs. condensate per hour.

Pipe Size	Model No.	Pressure Differential (PSIG)						
		1/4	1/2	1	2	5	10	15
3/4"	FT2015-3	70	100	140	200	210	220	230
1"	FT2015-4	175	250	350	500	525	550	575
1 1/4"	FT2015-5	425	600	850	1200	1260	1320	1380
1 1/2"	FT2015-6	850	1200	1700	2400	2520	2640	2760
2"	FT2015-8	1775	2500	3550	5000	5250	5500	5750

Note on capacity: Low pressure F & T Trap capacities are in accordance with standard adopted by the Steam Heating Manufacturer's Association (SHEMA) providing for the continuous elimination of air when the trap is operating at its maximum rating. No Safety factor need be applied. *Actual capacities are significantly greater than the SHEMA rating indicate.*

CAPACITIES (Gross)

lbs. condensate per hour.

Pipe Size	Model No.	Pressure Differential (PSIG)									
		1/4	1/2	1	2	5	10	15	20	25	30
3/4"	FT2015-3	293	387	513	683	824	1050	1129	–	–	–
1"	FT2015-4	293	387	513	683	824	1050	1129	–	–	–
1 1/4"	FT2015-5	630	808	1029	1302	1722	2100	2457	–	–	–
1 1/2"	FT2015-6	1155	1785	2520	3465	5250	6930	7980	–	–	–
2"	FT2015-8	2415	2940	3780	4883	7245	9450	11445	–	–	–
3/4"	FT2030-3	293	387	513	683	824	1050	1129	1271	1365	1439
1"	FT2030-4	293	387	513	683	824	1050	1129	1271	1365	1439
1 1/4"	FT2030-5	394	525	725	956	1260	1575	1764	1890	1995	2100
1 1/2"	FT2030-6	1050	1365	1785	2415	3570	4830	5775	6300	6930	7350
2"	FT2030-8	1365	1890	2625	3570	5460	7140	8190	9030	9765	10500

Note on capacity: Trap capacities are based on continuous discharge at stream temperature. The published figures are the result of an extensive testing program conducted in accordance with ANSI/ASME PTC 39.1 – 1980, *Condensate Removal Devices for Steam Systems*, at the B & J factory. Significantly greater capacities are realized when condensate temperature is below saturated steam temperature. Appropriate safety factors should be applied to these ratings.

NOTE: FLOAT TRAPS are available for those applications where draining liquid is the only requirement of the trap. In those instances the thermostatic air vent is replaced by a solid plug. To order, use the previous model numbers with the prefix "F" instead of "FT". All pipe sizes and pressure ratings are available.

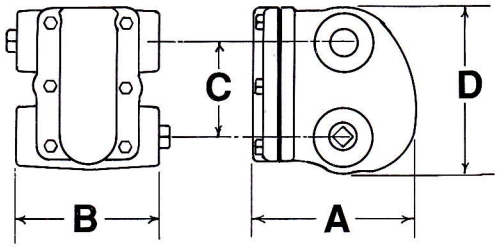

3/4" - 1 1/2"

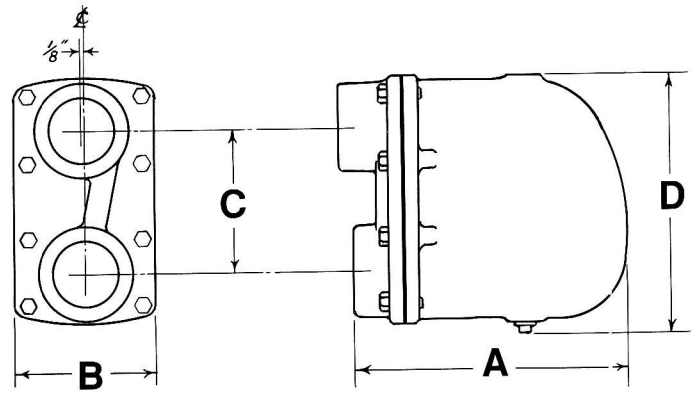

2"

DIMENSIONS

Size	Models	A	B	C	D	WT.
3/4"	FT2015-3, FT2030-3	5 11/16	5	3 5/16	5 5/8	11 lbs.
1"	FT2015-4, FT2030-4	5 11/16	5	3 5/16	5 5/8	11 lbs.
1 1/4"	FT2015-5, FT2030-5	6 1/8	5 1/2	3	5 3/8	12 lbs.
1 1/2"	FT2015-6, FT2030-6	8 1/4	6	3	8 1/4	24 lbs.
2"	FT2015-8, FT2030-8	10	4 7/8	4 7/8	9 1/4	22 lbs.

Barnes® & Jones INC.

In-Line Float & Thermostatic Steam Traps

Series FTI-2000 (VAC-125 PSIG)

Features

- Straight through piping connections
- Unaffected by sudden or wide pressure changes
- Responds quickly to condensate load changes
- Continuous discharge
- Function is not impaired by high back pressure
- Energy efficient
- Simple construction
- On-line repair
- Large air handling capacity
- Conforms to Federal Spec. WWT-696

Description

The Barnes & Jones In-line float & thermostatic traps Series FTI-2000 are designed for all types of low pressure or vacuum steam heating systems and steam process equipment. Typical applications include; unit heaters, space heaters, water heaters, pressing machines, low pressure mains and risers, and replacement of inefficient inverted bucket traps.

In-line float and thermostatic traps are especially well suited for apartments, hospitals, office buildings, and schools or wherever quiet operation is necessary.

Operation

The opening and closing of the valve is caused by changes in the condensate level within the trap shell.

MATERIALS

Part	Description
Head	Cast Iron, ASTM-A278 Class 30
Body	Cast Iron, ASTM-A278 Class 30
Bolting	Steel, Grade 5
Gaskets	Compressed Graphite
Float	Stainless Steel
Plug	Stainless Steel
Seat	Stainless Steel

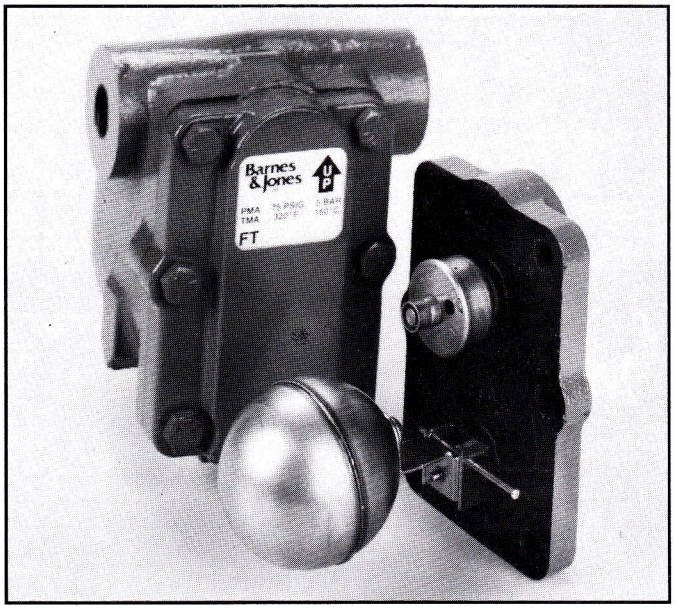

When the water level drops, the weight of the float closes the valve. As condensate enters the traps, the float rises and opens the valve, allowing the condensate to be discharged. The float is designed to provide sufficient buoyancy to overcome the differential pressure across the valve. The internal float and valve configuration is such that the condensate level is always above the valve, creating a continuous water seal at the seat.

Air and other gases are freely discharged as they reach the trap through the air vent. The calibrated thermostatic element will close the air vent immediately when the temperature surrounding the element reaches saturated steam temperature.

Construction

Barnes & Jones In-line float and thermostatic traps are compact, of rugged design, with easy access to all interior parts. The body is cast with In-line pipe connections for simple straight through pipe hook-ups. The air vent valve, seat, and the complete valve mechanism are manufactured from stainless steel. The repair kit consists of a complete, factory assembled head which simply bolts on to the body for ease of repair. No pipe connections need to be broken.

91 Pacella Park Drive • Randolph, MA 02368 • TEL (781) 963-8000 • FAX (781) 963-3322

Barnes® & Jones INC.

InLine Float & Thermostatic Engineering Specifications

CAPACITIES (Gross)

lbs. condensate per hour

Pipe Size	Model No.	Pressure Differential (PSIG)														
		¼	½	1	2	5	10	15	20	25	30	40	50	75	100	125
½"	FTI-2015-2	293	387	513	683	824	1050	1129	-	-	-	-	-	-	-	-
¾"	FTI-2015-3	293	387	513	683	824	1050	1129	-	-	-	-	-	-	-	-
1"	FTI-2015-4	293	387	513	683	824	1050	1129	-	-	-	-	-	-	-	-
1¼"	FTI-2015-5	630	808	1029	1302	1722	2100	2457	-	-	-	-	-	-	-	-
1½"	FTI-2015-6	1155	1785	2520	3465	5250	6930	7980	-	-	-	-	-	-	-	-
2"	FTI-2015-8	2415	2940	3780	4883	7245	9450	11445	-	-	-	-	-	-	-	-
½"	FTI-2030-2	293	387	513	683	824	1050	1129	1271	1375	1439	-	-	-	-	-
¾"	FTI-2030-3	293	387	513	683	824	1050	1129	1271	1375	1439	-	-	-	-	-
1"	FTI-2030-4	293	387	513	683	824	1050	1129	1271	1375	1439	-	-	-	-	-
1¼"	FTI-2030-5	394	525	725	956	1260	1575	1764	1890	1995	2100	-	-	-	-	-
1½"	FTI-2030-6	1050	1365	1785	2415	3570	4830	5775	6300	6930	7350	-	-	-	-	-
2"	FTI-2030-8	1365	1890	2625	3570	5460	7140	8190	9030	9765	10500	-	-	-	-	-
½"	FTI-2075-2	168	224	294	383	546	735	835	919	977	1019	1176	1292	1523	-	-
¾"	FTI-2075-3	168	224	294	383	546	735	835	919	977	1019	1176	1292	1523	-	-
1"	FTI-2075-4	168	224	294	383	546	735	835	919	977	1019	1176	1292	1523	-	-
1¼"	FTI-2075-5	410	578	667	956	1397	1943	2258	2520	2730	2940	3203	3465	3990	-	-
1½"	FTI-2075-6	557	761	1008	1365	1995	2783	3203	3570	3885	4200	4620	4988	5670	-	-
2"	FTI-2075-8	893	1155	1575	2100	3255	4358	4987	5460	5775	6090	6720	7140	8085	-	-
½"	FTI-2125-2	105	142	184	242	347	436	525	593	651	698	788	872	1019	1166	1249
¾"	FTI-2125-3	105	142	184	242	347	436	525	593	651	698	788	872	1019	1166	1249
1"	FTI-2125-4	105	142	184	242	347	436	525	593	651	698	788	872	1019	1166	1249
1¼"	FTI-2125-5	294	389	504	662	956	1260	1523	1733	1864	1995	2179	2363	2783	3098	3308
1½"	FTI-2125-6	420	546	714	935	1365	1785	2153	2415	2625	2835	3150	3360	3990	4410	4725
2"	FTI-2125-8	578	709	924	1286	2048	2730	3150	3413	3675	3990	4410	4850	5775	6405	6930

Note on capacity: Trap capacities are based on continuous discharge at steam temperatures. The published figures are the result of an extensive testing program conducted in accordance with ANSI/ASME PTC 39.1-1980, *Condensate Removal Devices for Steam Systems*, at the Barnes and Jones factory. Significantly greater applications are realized when condensate temperature is below saturated steam temperature. A safety factor between 2-4 should be applied to these ratings.

NOTE: FLOAT TRAPS are available for those applications where draining liquids is the only requirement of the trap. In those instances the thermostatic air vent is replaced by a solid plug. To order, use the previous model number with the prefix "FI" instead of "FTI". All pipe sizes and pressure ratings are available.

DIMENSIONS

Size	Models	A	B	C	WT.
½"-1"	FTI-2015	5"	6.25"	6.5"	11#
½"-1"	FTI-2030	5"	6.25"	6.5"	11#
½"-1"	FTI-2075	5"	6.25"	6.5"	11#
½"-1"	FTI-2125	5"	6.25"	6.5"	11#
1¼"	FTI-2015	5"	6.25"	6.5"	11#
1¼"	FTI-2030	5"	6.25"	6.5"	11#

DIMENSIONS

Size	Models	A	B	C	WT.
1¼"	FTI-2075	7.5"	10.5"	11.5"	48#
1¼"	FTI-2125	7.5"	10.5"	11.5"	48#
1½"-2"	FTI-2015	7.5"	10.5"	11.5"	47#
1½"-2"	FTI-2030	7.5"	10.5"	11.5"	47#
1½"-2"	FTI-2075	7.5"	10.5"	11.5"	47#
1½"-2"	FTI-2125	7.5"	10.5"	11.5"	47#

FTI-2000

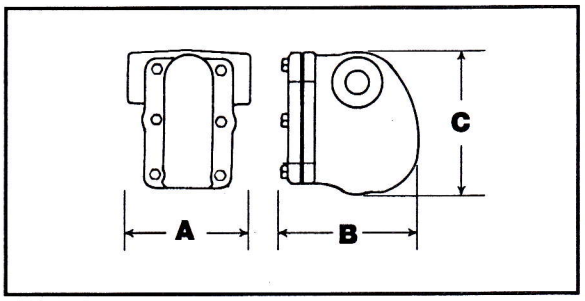

FTI-2000

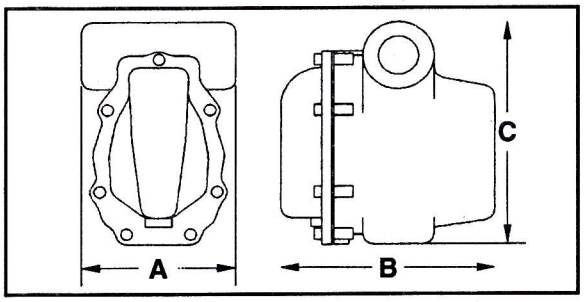

91 Pacella Park Drive • Randolph, MA 02368 • Tel. (781) 963-8000 • Fax (781) 963-3322 • www.barnesandjones.com

Thermostatic Steam Trap Repair Elements (Cage Units) for All Makes & Models VAC - 300 PSIG

Barnes & Jones INC.

Features

- Single Source for ALL your thermostatic trap elements
- Available for over 1000 makes and models
- One-piece repair reduces maintenance time and aggravation*
- No special tools needed for installation
- The only repair element available today that is calibrated to ensure maximum sensitivity in the field
- Every element is factory tested, under live steam, before shipment to you
- Improves original trap's performance with a payback in fuel savings within weeks
- Over 100 years repairing millions of steam traps.

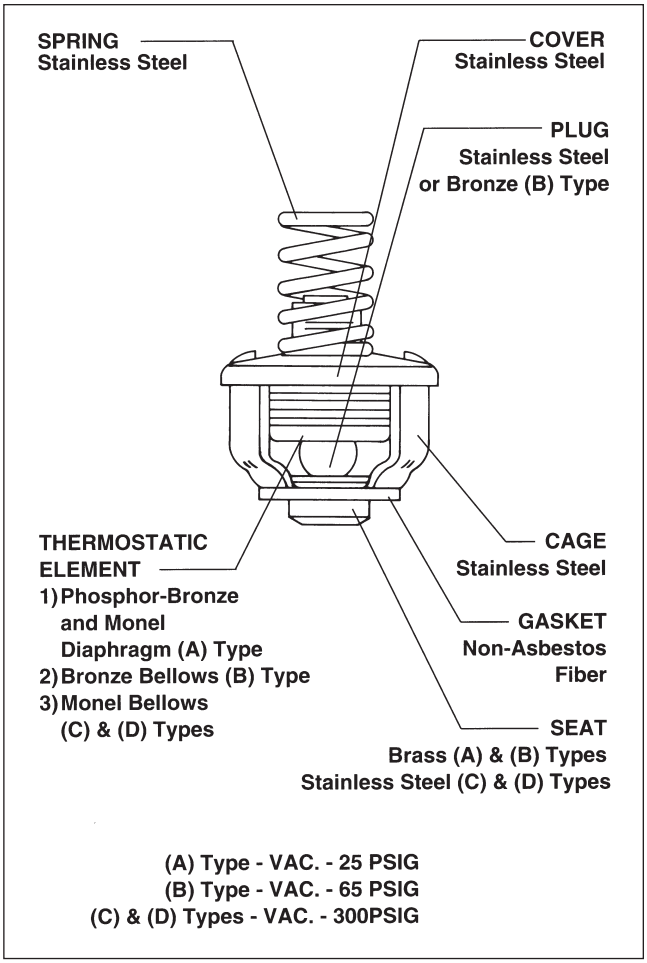

Description

The Cage Unit comprises all working parts of a thermostatic steam trap including the seat. All parts are calibrated together under actual steam conditions at our factory and are locked into the precisely correct working relationship within a stainless steel housing. This is a one piece, stand alone, fully removable and testable "trap within a trap." There are no loose parts to contend with; gone is the potential of overtightening, undertightening, crossthreading or misaligning assorted pieces of a "repair kit."

To the user, calibrated construction of the Barnes & Jones Cage Unit offers the assurance that every element will operate with the same performance in the field as it did when tested in our factory. This guarantees a greater sensitivity than could ever be promised with a bag of uncalibrated parts or any uncalibrated element.

Along with the fuel savings that accrues with the use of a more sensitive element, the Cage Unit offers increased efficiency with maintenance as well. The one piece construction allows for removal and testing of the element outside of the original trap body. See the reverse side for testing and maintenance information.

Adaptations of the Cage Unit are available for more than 1000 makes, styles and sizes of thermostatic steam traps for low, medium and high pressure service. Even if your system consists of traps from Dunham-Bush, Hoffman, Nicholson, Sarco, Warren-Webster and any other brands, Barnes & Jones Cage Units can repair them all! Ask for the "Steam Trap Repair Guide" to find the Cage Unit specifically designed to upgrade the working parts in your particular steam trap.

DO NOT be fooled by others offering a quick fix with nuggets, capsules, discs or other control devices for steam traps. Barnes & Jones has been repairing thermostatic and float & thermostatic steam traps for over 100 years and is the acknowledged leader in product performance and design.

*In some instances a new cover is needed on the first installation only. Consult the B & J Steam Trap Repair Guide.

91 Pacella Park Drive • Randolph, MA 02368 • Tel. 781-963-8000 • Fax 781-963-3322
www.barnesandjones.com

Steam Trap Maintenance & Repair

A faulty steam trap can ...

- waste valuable heating $$$
- destroy condensate pumps
- create hot and cold spots within a heating zone
- cause production inefficiency of process equipment
- produce destructive water hammer
- lead to undue wear on, and premature failure of, other traps

COMMON METHODS OF CHECKING TRAPS

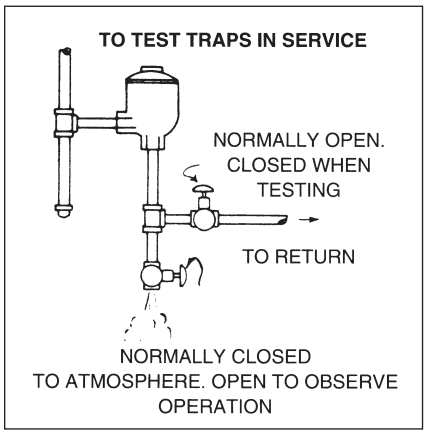

Fig. 1

Some people feel that a hot return line from the trap indicates a leak. Others listen to the trap for a tell tale whistle. Neither method is practical! A trap which is cycling properly will discharge condensate near saturated steam temperature. Obviously the return line will be hot also. In a closed system, piping will carry noises for long distances. With several traps in the vicinity, listening will not always pin point the specific trap that is bad.

Observing the discharge from the traps is the only positive way of checking the operation of a steam trap! Only then can you determine whether the trap is cycling properly and if it closes tightly. To do this in a closed system it is necessary to valve the discharge at each trap, so that the discharge from that trap is isolated from the rest of the system and the condensate can be dumped to atmosphere from the trap body as in Figure 1. It is of course a more costly installation but worth the added cost in the long run. Traps installed outdoors generally discharge to atmosphere and their operation can be observed readily.

If it is deemed too costly, or is physically impossible, to valve the discharge of every trap, the only possible way to check the trap operation (unless you use Barnes & Jones traps or Cage Units) is to remove each trap, mount it on a test rack and observe the operation. This can be time consuming and costly, perhaps as costly as to forget preventive maintenance and simply wait for each trap to fail badly before repairing it.

B & J MAKES TRAP CHECKING EASY

The Barnes & Jones thermostatic trap or any make of thermostatic trap with a B & J Cage Unit interior can, however, be easily and accurately tested by periodically replacing the Cage Unit, as in Figure 2. Then the Cage Units that have been removed can be tested in a representative trap body that has been attached to a steam line such as in Fig. 1. This can be done with complete accuracy as each Cage Unit operates independently and the trap body acts solely as a housing. This is not possible to do with other manufacturers' elements whose performance is dependent upon the relationship of a screwed in seat, element, lock washer and cover with the original trap body. The Cage Unit combines all these parts in an unalterable working relationship.

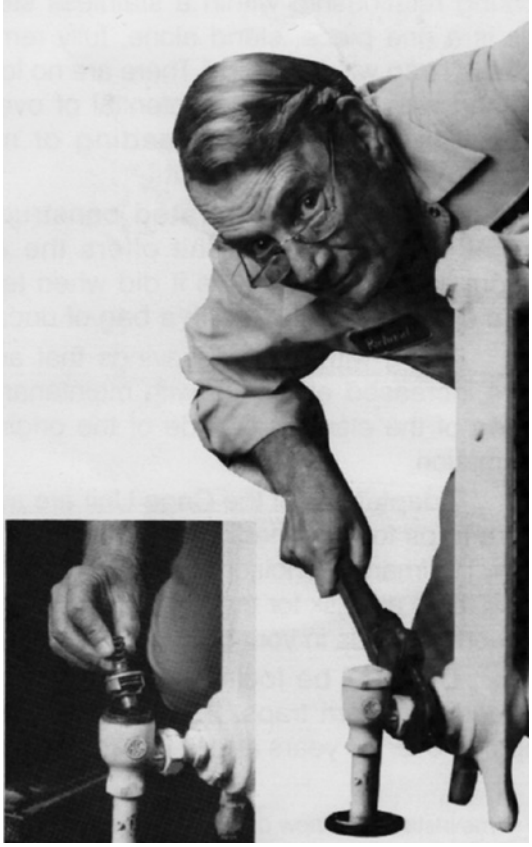

Fig. 2

YORK®
VRF

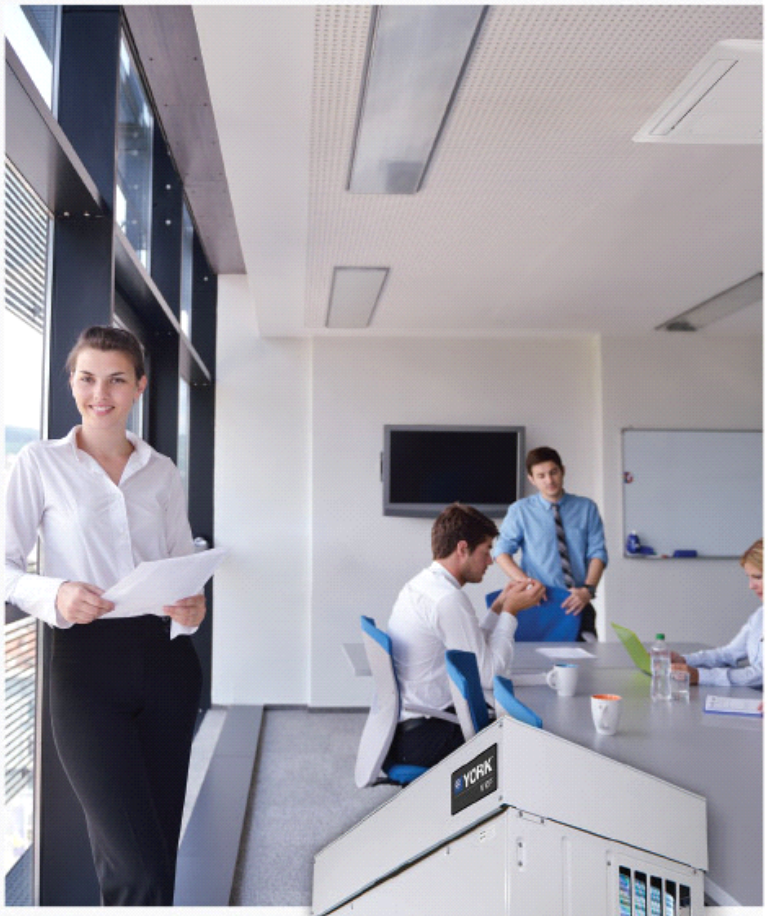

Variable Refrigerant Flow Systems
Selection Software Report

Project Name: Muncy Prison
Project Number:
Revision: 1

4/20/2018

Equipment Release and Approval Form

The following tables must be completed prior to releasing the equipment for fabrication/shipment. Please initial the column indicating the information contained in this submittal has been verified, or indicate to refer to a marked-up page.

SUBMITTAL VERIFICATION	
	Purchaser Initials:
Electrical voltage and electrical connections are compatible with jobsite requirements.	
Refrigerant Piping Lengths have been verified.	
Unit tag designations are correct.	
Equipment dimensions (length, width, and height) and weights have been verified to comply with jobsite conditions and rigging requirements. Please indicate approval by your initials on all included drawings.	

Important Notes:

1) Actual release cannot commence until this form is signed by the customer and returned to the submitter along with a release notification, want date, and ship to address.

2) Equipment "lead-time" does not start until confirmed release documentation is received, and the order is actually released to the factory.

3) Modifications to equipment configurations after release may impact cost and lead-time.

4) Attached configurations are as shown in the approved equipment submittals or as defined in superseding customer correspondence.

5) It is recommended that systems designed for operation below 14F ambient air temperature in heating mode and/or above 109F in cooling mode not exceed 100% connection ratio or total pipe length of 984ft. If exceed, the system may be at risk for reduced capacity (comfort) and/or shorter equipment lifespan. Consideration should be given to reducing connection ratio by upsizing the outdoor unit or utilizing building diversity for a true "operating" connection ratio and re-design the layout to reduce total pipe length.

6) "Want date" and/or "ship to address" changes made after this document is confirmed may impact cost and lead-time.

Please fill out the following table and refer to the receiving/rigging instructions in this submittal to help ensure a smooth delivery and installation of the equipment.

DELIVERY INFORMATION	
	Please fill out information below:
Contact name for coordinating delivery of equipment with transportation company.	
Contact phone number	
Advance notice required from transportation company prior to delivering equipment (typically 48 hours)	
Ship to address:	
Other special shipping instructions or requirements	

CUSTOMER APPROVAL:

Customer Name: _____

Signature (*) _____

Date: _____

Materials

Part number	Qty / Length	Description
YVAHP144B32S	**1**	**YVAHP144B32S Outdoor unit (YVAHP144B32S) 12 Ton VRF HP OU 208/230V 3PH - Outdoor unit 1**
YIFE015B21S	1	Indoor 1 CU-1 - 1.3 Ton Floor Exposed IU 208/230V 1PH
YIFE015B21S	1	Indoor 2 CU-1 - 1.3 Ton Floor Exposed IU 208/230V 1PH
YIFE015B21S	1	Indoor 3 CU-1 - 1.3 Ton Floor Exposed IU 208/230V 1PH
YIFE015B21S	1	Indoor 4 CU-1 - 1.3 Ton Floor Exposed IU 208/230V 1PH
YIFE015B21S	1	Indoor 5 CU-1 - 1.3 Ton Floor Exposed IU 208/230V 1PH
YIFE015B21S	1	Indoor 6 CU-1 - 1.3 Ton Floor Exposed IU 208/230V 1PH
YIFE015B21S	1	Indoor 7 CU-1 - 1.3 Ton Floor Exposed IU 208/230V 1PH
YIFE015B21S	1	Indoor 8 CU-1 - 1.3 Ton Floor Exposed IU 208/230V 1PH
YIFE015B21S	1	Indoor 9 CU-1 - 1.3 Ton Floor Exposed IU 208/230V 1PH
YIFE015B21S	1	Indoor 10 CU-1 - 1.3 Ton Floor Exposed IU 208/230V 1PH
MW-NP692A2	1	Multi kit - Multi kit
MW-NP452A2	3	Multi kit - Multi kit
MW-NP282A3	5	Multi kit - Multi kit
$^{1}/_{2}$	325.02ft	Length of pipe - not provided by manufacturer, provided by others
$^{1}/_{4}$	250.01ft	Length of pipe - not provided by manufacturer, provided by others
1 $^{1}/_{8}$	75.00ft	Length of pipe - not provided by manufacturer, provided by others
$^{3}/_{4}$	25.00ft	Length of pipe - not provided by manufacturer, provided by others
$^{3}/_{8}$	125.01ft	Length of pipe - not provided by manufacturer, provided by others
$^{5}/_{8}$	75.00ft	Length of pipe - not provided by manufacturer, provided by others
$^{7}/_{8}$	75.00ft	Length of pipe - not provided by manufacturer, provided by others
Additional refrigerant	29.3lb	Outdoor unit 1 additional refrigerant - R410A - not provided by manufacturer, provided by others
YVAHP144B32S	**1**	**YVAHP144B32S Outdoor unit (YVAHP144B32S) 12 Ton VRF HP OU 208/230V 3PH - Outdoor unit 2**
YIFE015B21S	1	Indoor 11 CU-2 - 1.3 Ton Floor Exposed IU 208/230V 1PH
YIFE015B21S	1	Indoor 12 CU-2 - 1.3 Ton Floor Exposed IU 208/230V 1PH
YIFE015B21S	1	Indoor 13 CU-2 - 1.3 Ton Floor Exposed IU 208/230V 1PH
YIFE015B21S	1	Indoor 14 CU-2 - 1.3 Ton Floor Exposed IU 208/230V 1PH

YIFE015B21S	1	Indoor 15 CU-2 - 1.3 Ton Floor Exposed IU 208/230V 1PH
YIFE015B21S	1	Indoor 16 CU-2 - 1.3 Ton Floor Exposed IU 208/230V 1PH
YIFE015B21S	1	Indoor 17 CU-2 - 1.3 Ton Floor Exposed IU 208/230V 1PH
YIFE015B21S	1	Indoor 18 CU-2 - 1.3 Ton Floor Exposed IU 208/230V 1PH
YIFE015B21S	1	Indoor 19 CU-2 - 1.3 Ton Floor Exposed IU 208/230V 1PH
MW-NP692A2	1	Multi kit - Multi kit
MW-NP452A2	2	Multi kit - Multi kit
MW-NP282A3	5	Multi kit - Multi kit
$^{1}/_{2}$	275.01ft	Length of pipe - not provided by manufacturer, provided by others
$^{1}/_{4}$	225.01ft	Length of pipe - not provided by manufacturer, provided by others
1 $^{1}/_{8}$	50.00ft	Length of pipe - not provided by manufacturer, provided by others
$^{3}/_{4}$	25.00ft	Length of pipe - not provided by manufacturer, provided by others
$^{3}/_{8}$	125.01ft	Length of pipe - not provided by manufacturer, provided by others
$^{5}/_{8}$	75.00ft	Length of pipe - not provided by manufacturer, provided by others
$^{7}/_{8}$	75.00ft	Length of pipe - not provided by manufacturer, provided by others
Additional refrigerant	24.8lb	Outdoor unit 2 additional refrigerant - R410A - not provided by manufacturer, provided by others
YVAHP144B32S	**1**	**YVAHP144B32S Outdoor unit (YVAHP144B32S) 12 Ton VRF HP OU 208/230V 3PH - Outdoor unit 3**
YIFE015B21S	1	Indoor 20 CU-3 - 1.3 Ton Floor Exposed IU 208/230V 1PH
YIFE015B21S	1	Indoor 21 CU-3 - 1.3 Ton Floor Exposed IU 208/230V 1PH
YIFE015B21S	1	Indoor 22 CU-3 - 1.3 Ton Floor Exposed IU 208/230V 1PH
YIFE015B21S	1	Indoor 23 CU-3 - 1.3 Ton Floor Exposed IU 208/230V 1PH
YIFE015B21S	1	Indoor 24 CU-3 - 1.3 Ton Floor Exposed IU 208/230V 1PH
YIFE015B21S	1	Indoor 25 CU-3 - 1.3 Ton Floor Exposed IU 208/230V 1PH
YIFE015B21S	1	Indoor 26 CU-3 - 1.3 Ton Floor Exposed IU 208/230V 1PH
YIFE015B21S	1	Indoor 27 CU-3 - 1.3 Ton Floor Exposed IU 208/230V 1PH
YIFE015B21S	1	Indoor 28 CU-3 - 1.3 Ton Floor Exposed IU 208/230V 1PH
YIFE015B21S	1	Indoor 29 CU-3 - 1.3 Ton Floor Exposed IU 208/230V 1PH
YIFE015B21S	1	Indoor 30 CU-3 - 1.3 Ton Floor Exposed IU 208/230V 1PH
MW-NP692A2	2	Multi kit - Multi kit
MW-NP452A2	3	Multi kit - Multi kit

MW-NP282A3	5	Multi kit - Multi kit
$^{1}/_{2}$	350.02ft	Length of pipe - not provided by manufacturer, provided by others
$^{1}/_{4}$	275.01ft	Length of pipe - not provided by manufacturer, provided by others
1 $^{1}/_{8}$	100.00ft	Length of pipe - not provided by manufacturer, provided by others
$^{3}/_{4}$	25.00ft	Length of pipe - not provided by manufacturer, provided by others
$^{3}/_{8}$	125.01ft	Length of pipe - not provided by manufacturer, provided by others
$^{5}/_{8}$	100.00ft	Length of pipe - not provided by manufacturer, provided by others
$^{7}/_{8}$	75.00ft	Length of pipe - not provided by manufacturer, provided by others
Additional refrigerant	33.6lb	Outdoor unit 3 additional refrigerant - R410A - not provided by manufacturer, provided by others
CBN02	1	Level 1 CC - (H-Link II System 1) - BACnet Adapter
CCL01	1	Level 2 CC - (H-Link II System 1) - Large Central Controller

Indoor unit details

Outdoor Unit	Name	Unit Type	Unit	Cooling Dry Bulb Temp (F)	Cooling Wet Bulb Temp (F)	Heating Dry Bulb Temp (F)	Total Cooling Capacity (MBH)	Sensible Cooling Capacity (MBH)	Total Heating Capacity (MBH)	Air Flow (CFM)
Outdoor unit 1 YVAHP144B32S	Indoor 1	Floor Exposed	YIFE015B21S	80.0	67.0	70.0	12.9	10.5	16.3	565
	Indoor 2	Floor Exposed	YIFE015B21S	80.0	67.0	70.0	12.9	10.5	16.3	565
	Indoor 3	Floor Exposed	YIFE015B21S	80.0	67.0	70.0	12.9	10.5	16.3	565
	Indoor 4	Floor Exposed	YIFE015B21S	80.0	67.0	70.0	12.9	10.5	16.3	565
	Indoor 5	Floor Exposed	YIFE015B21S	80.0	67.0	70.0	12.9	10.5	16.3	565
	Indoor 6	Floor Exposed	YIFE015B21S	80.0	67.0	70.0	12.9	10.5	16.3	565
	Indoor 7	Floor Exposed	YIFE015B21S	80.0	67.0	70.0	12.9	10.5	16.3	565
	Indoor 8	Floor Exposed	YIFE015B21S	80.0	67.0	70.0	12.9	10.5	16.3	565
	Indoor 9	Floor Exposed	YIFE015B21S	80.0	67.0	70.0	12.9	10.5	16.3	565
	Indoor 10	Floor Exposed	YIFE015B21S	80.0	67.0	70.0	12.9	10.5	16.3	565
Additional refrigerant (lb):		**29.3**				**Total (MBH):**	**128.5**	**105.2**	**162.9**	

Indoor unit type			**Duct 2 pipe**	**Non-duct 2 pipe**	**Mixed 2 pipe**
Outdoor unit 1	YVAHP144B32S		10206791	10206707	10207541
Cooling	**Capacity**	**[Btu/h]**	138000.00	138000.00	138000.00
	EER	**[Btu/Wh]**	11.20	10.90	11.05
	IEER	**[Btu/Wh]**	21.20	23.90	22.55
Heating	**Capacity 47F**	**[Btu/h]**	154000.00	154000.00	154000.00
	COP47F	**[W/W]**	3.40	3.42	3.41
	Capacity 17F	**[Btu/h]**	110000.00	110000.00	150000.00
	COP17F	**[W/W]**	2.15	2.12	2.14
Cooling & Heating	**SCHE**	**[Btu/Wh]**			

Outdoor unit 1	**YVAHP144B32S**
Cooling DB (°F)	88.9
Heating DB (°F)	47.0
Heating WB (°F)	43.0
Connection %	104%
Total Cooling MBH	128.5
Sensible Cooling MBH	105.2
Heating MBH	162.9

Outdoor Unit	Name	Unit Type	Unit	Cooling Dry Bulb Temp (F)	Cooling Wet Bulb Temp (F)	Heating Dry Bulb Temp (F)	Total Cooling Capacity (MBH)	Sensible Cooling Capacity (MBH)	Total Heating Capacity (MBH)	Air Flow (CFM)
Outdoor unit 2 YVAHP144B32S	Indoor 11	Floor Exposed	YIFE015B21S	80.0	67.0	70.0	13.6	11.2	20.8	565
	Indoor 12	Floor Exposed	YIFE015B21S	80.0	67.0	70.0	13.6	11.2	20.8	565
	Indoor 13	Floor Exposed	YIFE015B21S	80.0	67.0	70.0	13.6	11.2	20.8	565
	Indoor 14	Floor Exposed	YIFE015B21S	80.0	67.0	70.0	13.6	11.2	20.8	565
	Indoor 15	Floor Exposed	YIFE015B21S	80.0	67.0	70.0	13.6	11.2	20.8	565
	Indoor 16	Floor Exposed	YIFE015B21S	80.0	67.0	70.0	13.6	11.2	20.8	565
	Indoor 17	Floor Exposed	YIFE015B21S	80.0	67.0	70.0	13.6	11.2	20.8	565
	Indoor 18	Floor Exposed	YIFE015B21S	80.0	67.0	70.0	13.6	11.2	20.8	565
	Indoor 19	Floor Exposed	YIFE015B21S	80.0	67.0	70.0	13.6	11.2	20.8	565
Additional refrigerant (lb):		**24.8**				**Total (MBH):**	**122.6**	**100.4**	**187.6**	

Indoor unit type			**Duct 2 pipe**	**Non-duct 2 pipe**	**Mixed 2 pipe**
Outdoor unit 2	YVAHP144B32S		10206791	10206707	10207541
Cooling	**Capacity**	**[Btu/h]**	138000.00	138000.00	138000.00
	EER	**[Btu/Wh]**	11.20	10.90	11.05
	IEER	**[Btu/Wh]**	21.20	23.90	22.55
Heating	**Capacity 47F**	**[Btu/h]**	154000.00	154000.00	154000.00
	COP47F	**[W/W]**	3.40	3.42	3.41
	Capacity 17F	**[Btu/h]**	110000.00	110000.00	150000.00
	COP17F	**[W/W]**	2.15	2.12	2.14
Cooling & Heating	**SCHE**	**[Btu/Wh]**			

Outdoor unit 2	**YVAHP144B32S**
Cooling DB (°F)	88.9
Heating DB (°F)	47.0
Heating WB (°F)	43.0
Connection %	94%
Total Cooling MBH	122.6
Sensible Cooling MBH	100.4
Heating MBH	187.6

Outdoor Unit	Name	Unit Type	Unit	Cooling Dry Bulb Temp (F)	Cooling Wet Bulb Temp (F)	Heating Dry Bulb Temp (F)	Total Cooling Capacity (MBH)	Sensible Cooling Capacity (MBH)	Total Heating Capacity (MBH)	Air Flow (CFM)
Outdoor unit 3 YVAHP144B32S	Indoor 20	Floor Exposed	YIFE015B21S	80.0	67.0	70.0	11.8	9.7	15.9	565
	Indoor 21	Floor Exposed	YIFE015B21S	80.0	67.0	70.0	11.8	9.7	15.9	565
	Indoor 22	Floor Exposed	YIFE015B21S	80.0	67.0	70.0	11.8	9.7	15.9	565
	Indoor 23	Floor Exposed	YIFE015B21S	80.0	67.0	70.0	11.8	9.7	15.9	565
	Indoor 24	Floor Exposed	YIFE015B21S	80.0	67.0	70.0	11.8	9.7	15.9	565
	Indoor 25	Floor Exposed	YIFE015B21S	80.0	67.0	70.0	11.8	9.7	15.9	565
	Indoor 26	Floor Exposed	YIFE015B21S	80.0	67.0	70.0	11.8	9.7	15.9	565
	Indoor 27	Floor Exposed	YIFE015B21S	80.0	67.0	70.0	11.8	9.7	15.9	565
	Indoor 28	Floor Exposed	YIFE015B21S	80.0	67.0	70.0	11.8	9.7	15.9	565
	Indoor 29	Floor Exposed	YIFE015B21S	80.0	67.0	70.0	11.8	9.7	15.9	565
	Indoor 30	Floor Exposed	YIFE015B21S	80.0	67.0	70.0	11.8	9.7	15.9	565
Additional refrigerant (lb):		**33.6**				**Total (MBH):**	**130.2**	**106.6**	**175.1**	

Indoor unit type			**Duct 2 pipe**	**Non-duct 2 pipe**	**Mixed 2 pipe**
Outdoor unit 3	YVAHP144B32S		10206791	10206707	10207541
Cooling	**Capacity**	**[Btu/h]**	138000.00	138000.00	138000.00
	EER	**[Btu/Wh]**	11.20	10.90	11.05
	IEER	**[Btu/Wh]**	21.20	23.90	22.55
Heating	**Capacity 47F**	**[Btu/h]**	154000.00	154000.00	154000.00
	COP47F	**[W/W]**	3.40	3.42	3.41
	Capacity 17F	**[Btu/h]**	110000.00	110000.00	150000.00
	COP17F	**[W/W]**	2.15	2.12	2.14
Cooling & Heating	**SCHE**	**[Btu/Wh]**			

Outdoor unit 3	**YVAHP144B32S**
Cooling DB (°F)	88.9
Heating DB (°F)	47.0
Heating WB (°F)	43.0
Connection %	115%
Total Cooling MBH	130.2
Sensible Cooling MBH	106.6
Heating MBH	175.1

Total length (liquid): 475.0ft
Max. equivalent length: 250.0ft
Estimated max. equivalent length: 250.0ft
Additional refrigerant charge: 29.3lb
Total refrigerant charge: 52.9lb
Maximum indoor unit height difference: 15.0ft
Outdoor unit height compared to indoor units: 0.0ft Same level

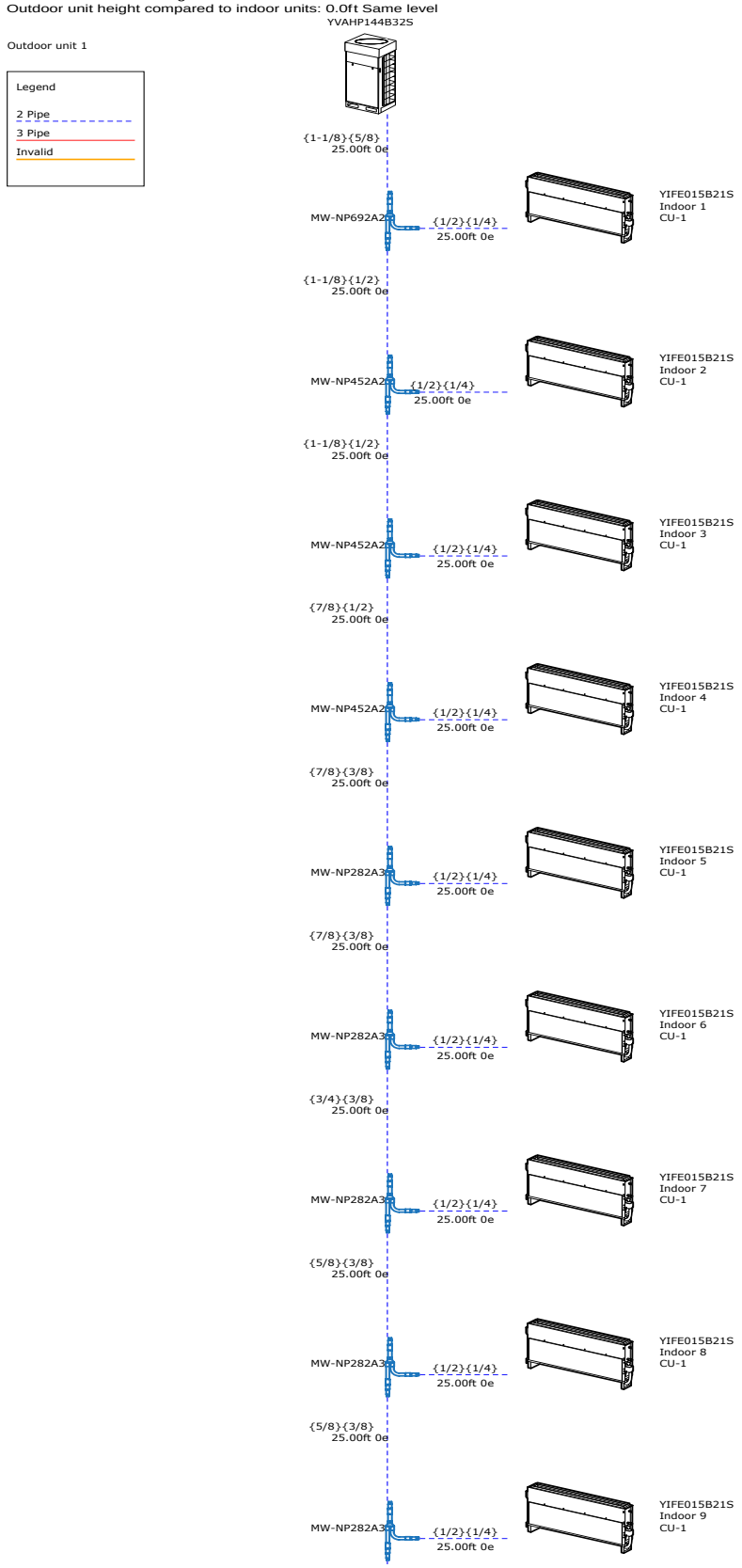

Total length (liquid): 475.0ft
Max. equivalent length: 250.0ft
Estimated max. equivalent length: 250.0ft
Additional refrigerant charge: 29.3lb
Total refrigerant charge: 52.9lb
Maximum indoor unit height difference: 15.0ft
Outdoor unit height compared to indoor units: 0.0ft Same level

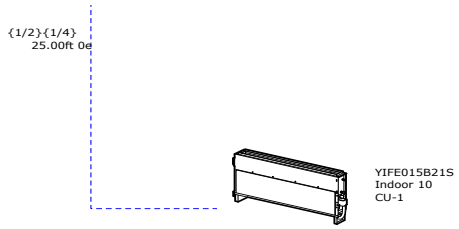

Total length (liquid): 425.0ft
Max. equivalent length: 225.0ft
Estimated max. equivalent length: 225.0ft
Additional refrigerant charge: 24.8lb
Total refrigerant charge: 48.4lb
Maximum indoor unit height difference: 15.0ft
Outdoor unit height compared to indoor units: 0.0ft Same level

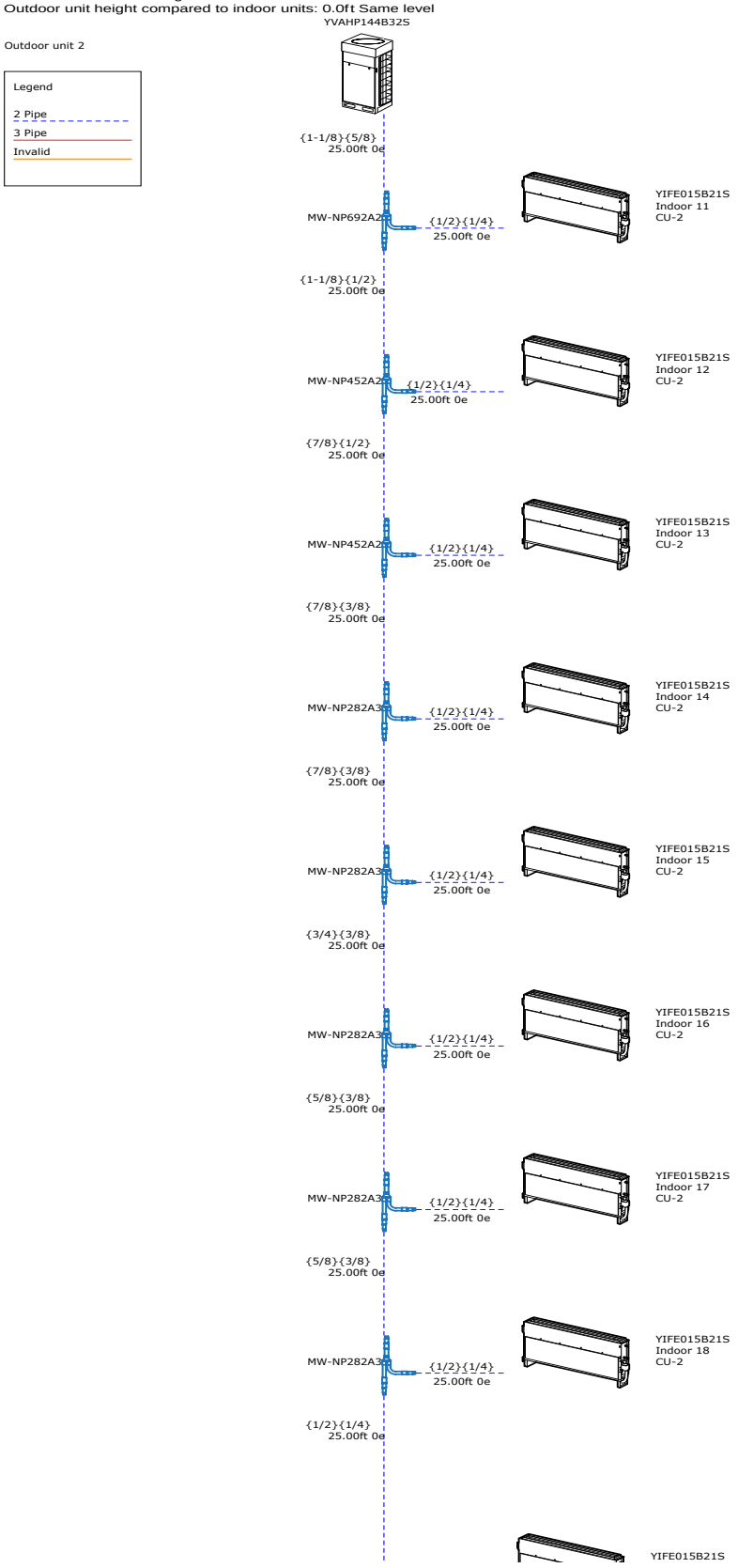

Total length (liquid): 425.0ft
Max. equivalent length: 225.0ft
Estimated max. equivalent length: 225.0ft
Additional refrigerant charge: 24.8lb
Total refrigerant charge: 48.4lb
Maximum indoor unit height difference: 15.0ft
Outdoor unit height compared to indoor units: 0.0ft Same level

Total length (liquid): 525.0ft
Max. equivalent length: 275.0ft
Estimated max. equivalent length: 275.0ft
Additional refrigerant charge: 33.6lb
Total refrigerant charge: 57.2lb
Maximum indoor unit height difference: 15.0ft
Outdoor unit height compared to indoor units: 0.0ft Same level

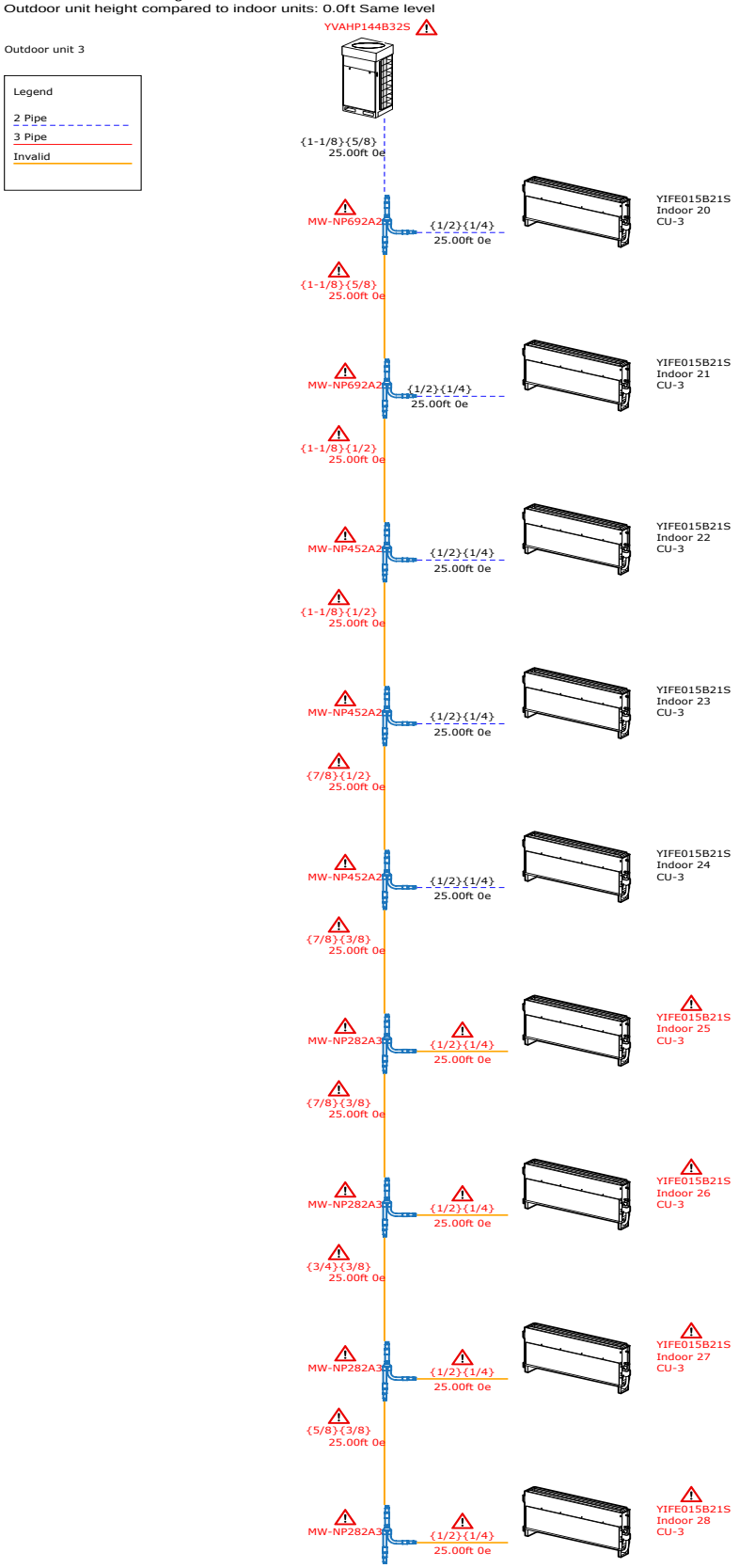

Total length (liquid): 525.0ft
Max. equivalent length: 275.0ft
Estimated max. equivalent length: 275.0ft
Additional refrigerant charge: 33.6lb
Total refrigerant charge: 57.2lb
Maximum indoor unit height difference: 15.0ft
Outdoor unit height compared to indoor units: 0.0ft Same level

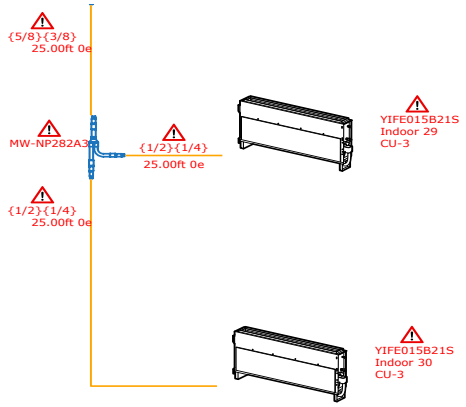

Controller details

	Level 1 CC (CBN02)				
			Zone		Indoor 1 - CU-1 (YIFE015B21S) - (YVAHP144B32S)
			Zone		Indoor 2 - CU-1 (YIFE015B21S) - (YVAHP144B32S)
			Zone		Indoor 3 - CU-1 (YIFE015B21S) - (YVAHP144B32S)
			Zone		Indoor 4 - CU-1 (YIFE015B21S) - (YVAHP144B32S)
			Zone		Indoor 5 - CU-1 (YIFE015B21S) - (YVAHP144B32S)
			Zone		Indoor 6 - CU-1 (YIFE015B21S) - (YVAHP144B32S)
			Zone		Indoor 7 - CU-1 (YIFE015B21S) - (YVAHP144B32S)
			Zone		Indoor 8 - CU-1 (YIFE015B21S) - (YVAHP144B32S)
			Zone		Indoor 9 - CU-1 (YIFE015B21S) - (YVAHP144B32S)
			Zone		Indoor 10 - CU-1 (YIFE015B21S) - (YVAHP144B32S)
			Zone		Indoor 11 - CU-2 (YIFE015B21S) - (YVAHP144B32S)
			Zone		Indoor 12 - CU-2 (YIFE015B21S) - (YVAHP144B32S)
			Zone		Indoor 13 - CU-2 (YIFE015B21S) - (YVAHP144B32S)
			Zone		Indoor 14 - CU-2 (YIFE015B21S) - (YVAHP144B32S)
H-Link II System 1		Level 2 CC (CCL01)	Zone		Indoor 15 - CU-2 (YIFE015B21S) - (YVAHP144B32S)
			Zone		Indoor 16 - CU-2 (YIFE015B21S) - (YVAHP144B32S)
			Zone		Indoor 17 - CU-2 (YIFE015B21S) - (YVAHP144B32S)
			Zone		Indoor 18 - CU-2 (YIFE015B21S) - (YVAHP144B32S)
			Zone		Indoor 19 - CU-2 (YIFE015B21S) - (YVAHP144B32S)
			Zone		Indoor 20 - CU-3 (YIFE015B21S) - (YVAHP144B32S)
			Zone		Indoor 21 - CU-3 (YIFE015B21S) - (YVAHP144B32S)
			Zone		Indoor 22 - CU-3 (YIFE015B21S) - (YVAHP144B32S)
			Zone		Indoor 23 - CU-3 (YIFE015B21S) - (YVAHP144B32S)
			Zone		Indoor 24 - CU-3 (YIFE015B21S) - (YVAHP144B32S)
			Zone		Indoor 25 - CU-3 (YIFE015B21S) - (YVAHP144B32S)
			Zone		Indoor 26 - CU-3 (YIFE015B21S) - (YVAHP144B32S)

			Zone		Indoor 27 - CU-3 (YIFE015B21S) - (YVAHP144B32S)
			Zone		Indoor 28 - CU-3 (YIFE015B21S) - (YVAHP144B32S)
			Zone		Indoor 29 - CU-3 (YIFE015B21S) - (YVAHP144B32S)
			Zone		Indoor 30 - CU-3 (YIFE015B21S) - (YVAHP144B32S)

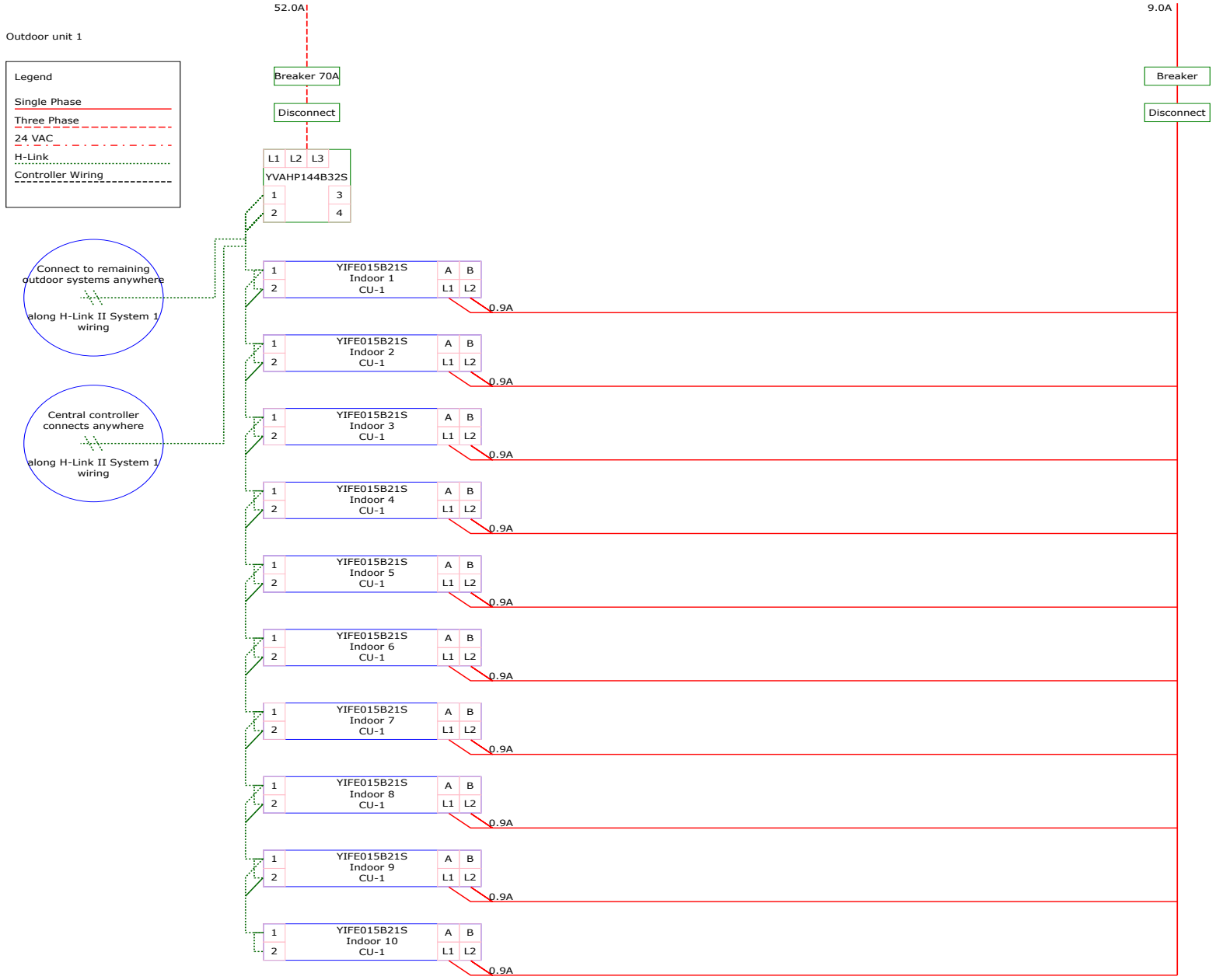
52.0A
9.0A
Outdoor unit 1
Legend
Single Phase
Three Phase
24 VAC
H-Link
Controller Wiring
Breaker 70A
Disconnect
Breaker
Disconnect
L1 L2 L3
YVAHP144B32S
1 3
2 4
Connect to remaining outdoor systems anywhere
along H-Link II System 1 wiring
Central controller connects anywhere
along H-Link II System 1 wiring
YIFE015B21S Indoor 1 CU-1
YIFE015B21S Indoor 2 CU-1
YIFE015B21S Indoor 3 CU-1
YIFE015B21S Indoor 4 CU-1
YIFE015B21S Indoor 5 CU-1
YIFE015B21S Indoor 6 CU-1
YIFE015B21S Indoor 7 CU-1
YIFE015B21S Indoor 8 CU-1
YIFE015B21S Indoor 9 CU-1
YIFE015B21S Indoor 10 CU-1
A B
L1 L2
0.9A

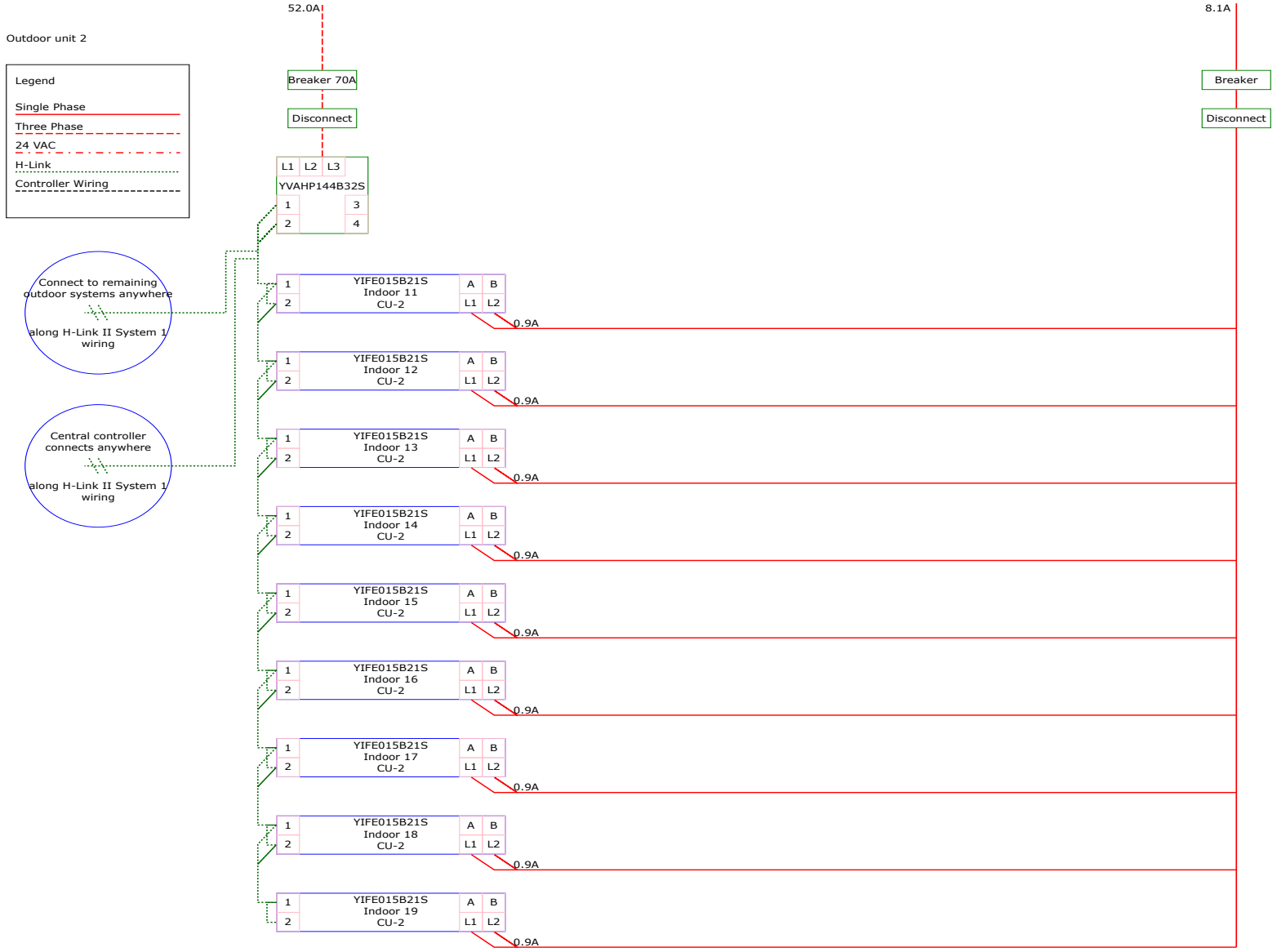
52.0A
8.1A
Outdoor unit 2
Legend
Single Phase
Three Phase
24 VAC
H-Link
Controller Wiring
Breaker 70A
Disconnect
Breaker
Disconnect
L1 L2 L3
YVAHP144B32S
1 3
2 4
Connect to remaining outdoor systems anywhere
along H-Link II System 1 wiring
Central controller connects anywhere
along H-Link II System 1 wiring
YIFE015B21S Indoor 11 CU-2
YIFE015B21S Indoor 12 CU-2
YIFE015B21S Indoor 13 CU-2
YIFE015B21S Indoor 14 CU-2
YIFE015B21S Indoor 15 CU-2
YIFE015B21S Indoor 16 CU-2
YIFE015B21S Indoor 17 CU-2
YIFE015B21S Indoor 18 CU-2
YIFE015B21S Indoor 19 CU-2
A B
L1 L2
0.9A

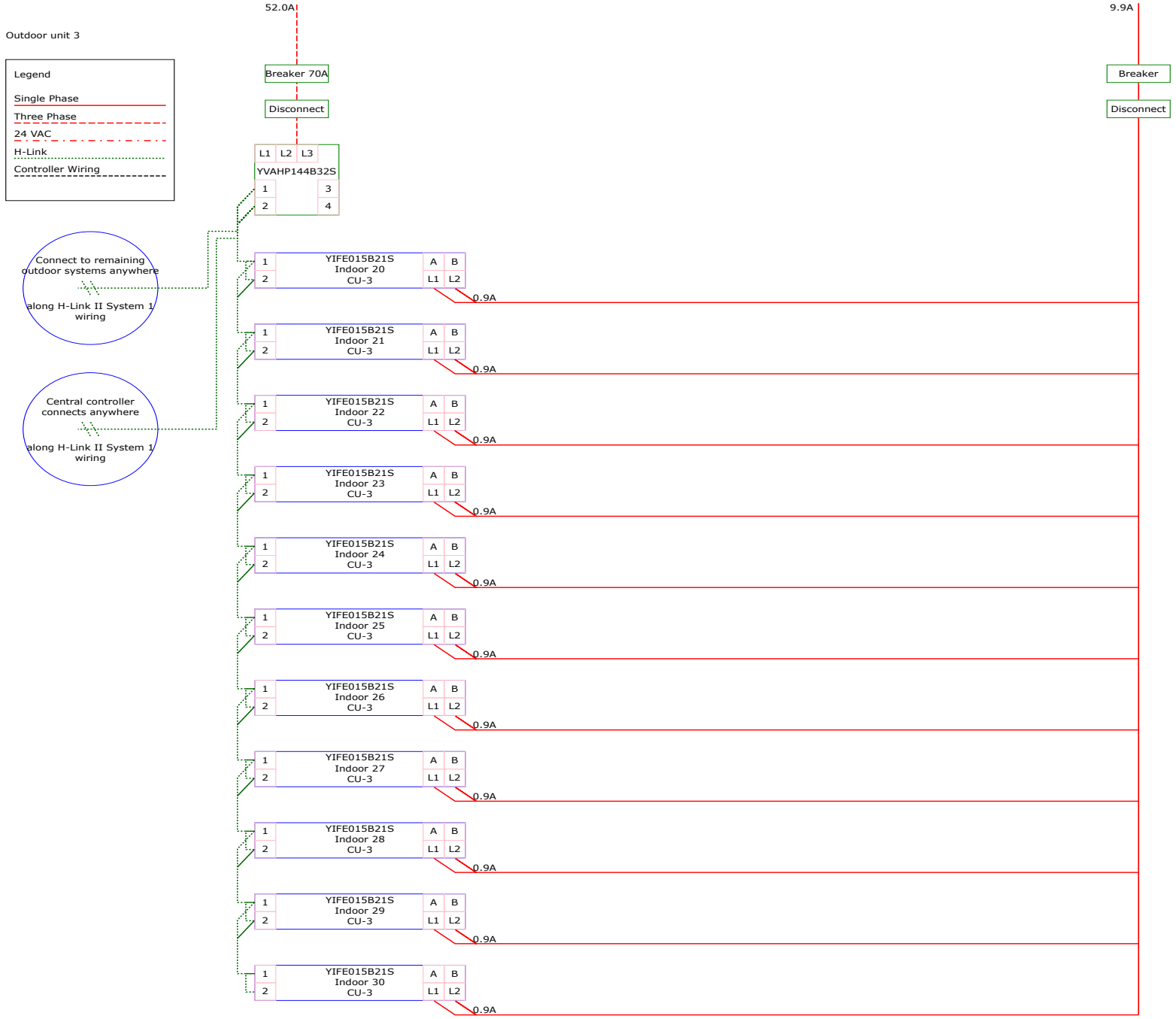
52.0A
9.9A
Outdoor unit 3
Legend
Single Phase
Three Phase
24 VAC
H-Link
Controller Wiring
Breaker 70A
Disconnect
Breaker
Disconnect
L1 L2 L3
YVAHP144B32S
1
2
3
4
Connect to remaining outdoor systems anywhere
along H-Link II System 1 wiring
Central controller connects anywhere
along H-Link II System 1 wiring
YIFE015B21S
Indoor 20
CU-3
Indoor 21
Indoor 22
Indoor 23
Indoor 24
Indoor 25
Indoor 26
Indoor 27
Indoor 28
Indoor 29
Indoor 30
A B
L1 L2
0.9A

CBN02 VRF Smart Gateway

FEATURES AND BENEFITS:

- Supports up to 64 VRF systems, up to 160 Indoor Units, and up to 200 total Indoor and Outdoor Units
- Integrates with the Metasys and FX building automation systems
- Integrates with third party building automation systems supporting the BACnet IP protocol
- BACnet Gateway (B-GW) device profile
- BACnet IP, (Annex J), BACnet Broadcast Management Device (BBMD)
- Connect up to 4 Large Central Controllers (CCCL01) simultaneously to the same H-LINK II segment

VRF Smart Gateway Specifications	
Power Consumption	12 to 15 VDC at 5.2 W maximum
Ambient Temperature Conditions	Operating: 0 to 50°C (32 to 122°F)
	Operating Survival: -30 to 60°C (-22 to 140°F)
	Non-Operating: -40 to 70°C (-40 to 158°F)
Ambient Humidity Conditions	Storage: 5 to 95% RH, 30°C (86°F) maximum dew point conditions
	Operating: 5 to 95% RH, 30°C (86°F) maximum dew point conditions
Dimensions	145.4 x 85.4 x 40.1 mm (5.72 x 3.36 x 1.58 in.) when used vertically
Weight	0.21 kg (0.46 lb) Note: Weights do not include an external power supply.
BTL Certified	Software Version 1.1 or later

Communication Specifications	
Transmission Power (Typical)	Wireless Local Area Network (WLAN) Transmission Power at CE Compliant levels:
	+14.5 dBm @ 54 Mbps; +12.5 dBm @ 65 Mbps
	Channel 6 preconfigured, supported CH 1 to 11 for United States and Canada, and CH 1 to 12 for all other countries
WLAN Receiver Sensitivity (Typical)	-76 dBm, 10% packet error rate (PER), 54 Mbps
	-73 dBm, 10% PER, 65 Mbps
Transmission Speeds	Wireless Communication: 2.4 GHz ISM bands, 802.11 b/g/n, 11/22/54 Mbps
	Serial Communication (H-LINK Bus): 9600 bps, Connection to Outdoor and Indoor Units
	Ethernet Communication: 10, 100 Mbps, Connection to BAS over BACnet IP
Transmission Range (Typical)	Wireless Communication: 30 m (98 ft) line-of-sight indoors, 91 m (299 ft) line-of-sight outdoors
	Serial Communication (H-LINK Bus): 1,000 m (3,280 ft) cable length
	Ethernet Communication: 100 m (328 ft) cable length
Wireless Security	WPA2-PSK TKIP (Wi-Fi Protected Access Pre-Shared Key mode Temporal Key Integrity Protocol)
	WPA2-EAP-PEAP, WPA2-EAP-TLS

version 201703

Indoor Unit Control Functions and Data

	Function	Description
Control Functions	Unit Enable Mode	Sets the operation of the Indoor Unit (Shutdown / Enable)
	System Mode	Sets the operational mode of the Indoor Unit (Cool / Dry / Fan / Heat / Auto)
	Zone Temperature Setpoint	Sets the room temperature setpoint of the Indoor Unit (17-30°C / 62-86°F)
	Supply Fan Speed	Sets the supply fan speed of the Indoor Unit (Low, Medium, High, Auto)
	Remote Control Operation Lockouts	Enables or disables the remote controller's ability to control the Indoor Unit
	Filter Status Reset	Resets the air intake filter status
Monitoring Points	Supply Fan Status	Reports the operational status of the Indoor Unit (Off / On)
	System Status	Reports the actual operational mode of the Indoor Unit (Cool / Dry / Fan / Heat)
	Zone Temperature	Reports the current room temperature in the Indoor Unit (-50-99°C / -58-210°F)
	Remote Zone Temperature	Reports the current temperature measured by the thermistor in the remote controller
	Supply Fan Status	Reports the actual fan speed of the Indoor Unit (Low / Medium / High)
	Filter Status	Reports the intake air filter condition of the Indoor Unit (Clean / Dirty)
	Expansion Valve Position	Reports the position of the expansion valve in the Indoor Unit from 0-100%
	Liquid Pipe Temperature	Reports the temperature of the liquid pipe feeding the Indoor Unit (-50-99°C / -58-210°F)
	Gas Pipe Temperature	Reports the temperature of the gas pipe feeding the Indoor Unit (-50-99°C / -58-210°F)
	Return Air Temperature	Reports the current air intake temperature in the Indoor Unit (-50-99°C / -58-210°F)
	Discharge Air Temperature	Reports the current discharge air temperature of the Indoor Unit (-50-99°C / 58-210°F)
	Coil Differential Temperature	Reports the difference between the Return Air Temp and Discharge Air Temp in degrees C or F
	Requested Compressor Speed	Reports the requested compressor speed in Hz
	Unit Alarm Status	Reports whether or not the Indoor Unit is operating normally and issues an alarm if the Indoor Unit detects a malfunction
	Alarm Code	Reports the specific malfunction code of the Indoor Unit

version 201703

Outdoor Unit Data

	Object	Description
Monitoring Points	System Mode	Reports the system mode of the Outdoor Unit (Heat / Cool / Auto)
	System Status	Reports a specific status value of the Outdoor Unit
	Heat Exchanger State	Reports the state the heat exchanger is operating in (COND / EVAP)
	Inverter State	Reports the state the inverter is operating in
	Fan Controller State	Reports the state the fan is operating in
	Inverter Hours	Reports the runtime hours of the inverter compressor 1
	Compressor Hours	Reports the runtime hours of the compressor 2
	Inverter Compressor Frequency	Reports the current inverter compressor frequency in Hz
	Total Frequency	Reports the total running frequency in Hz of all inverter and standard compressors
	Fan Output	Reports the fan output level from 0-100%
	Expansion Valve Position	Reports the expansion valve position from 0-100%
	Discharge Pressure	Reports the discharge or high pressure from 0-3,698.5 psi
	Suction Pressure	Reports the suction or low pressure from 0-369.8 psi
	Outdoor Air Temperature	Reports the outside air temperature, or the temperature read by the thermistor in the Outdoor Unit (-50-99°C / -58-210°F)
	Inverter Compressor Primary Current	Reports the primary current draw in Amps of inverter compressor 1 (0-127 A)
	Inverter Compressor Secondary Current	Reports the secondary current draw in Amps of inverter compressor 1 (0-127 A)
	Compressor 2 Current	Reports the current draw in Amps of compressor 2 (0-127 A)
	Inverter Compressor Top Temperature	Reports the temperature of inverter compressor 1 (0-99°C / 32-210°F)
	Compressor 2 Top Temperature	Reports the temperature of compressor 2 (0-99°C / 32-210°F)
	Protection Code	Reports the specific protection code value
	Defrost Status	Reports if the Outdoor Unit is in defrost mode (Off / On)
	Emergency Run Status	Reports if the Outdoor Unit is in emergency run mode (Off / On)
	Alarm Code	Displays a specific malfunction code of the Outdoor Unit
	Inverter Status	Reports if the inverter is running (Stop / Run)
	Fan Status	Reports if the fan is running (Stop / Run)

version 201703

CBN02

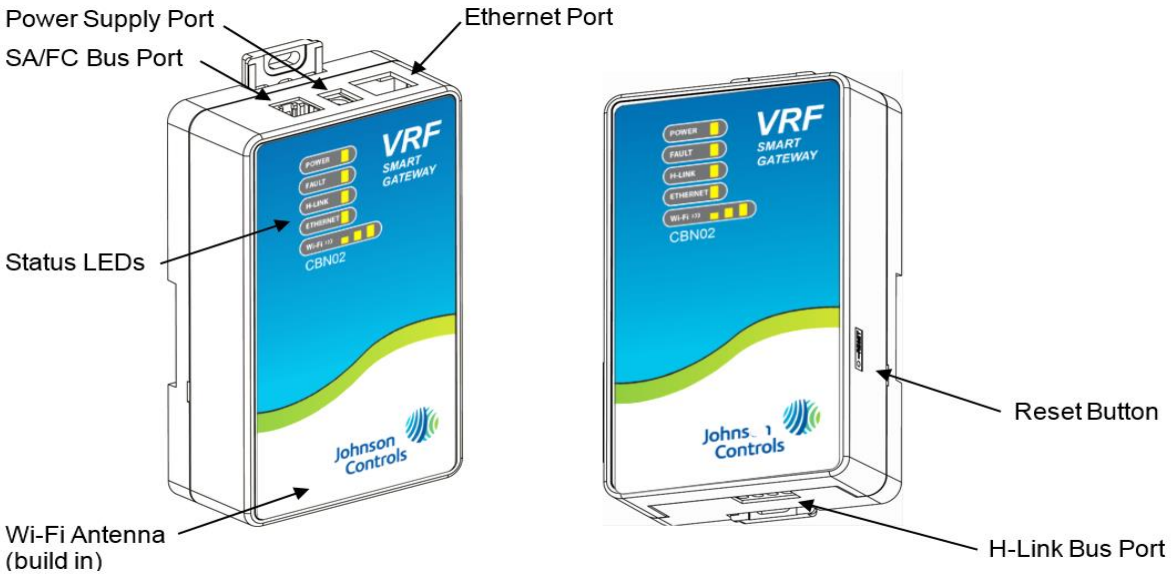

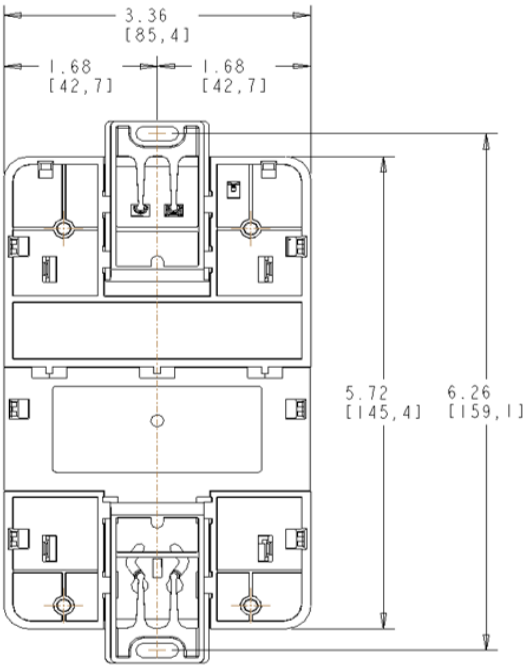

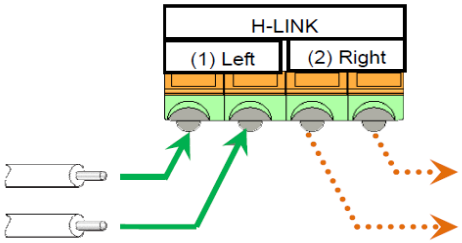

version 201703

Submittal Data Sheet

CCL01 **Large Central Controller**

Model Number	CCL01
Model Type	Large Central Controller
Control Functions	Run/Stop
	Mode
	Temperature
	Fan Speed
	Louver Angle
	Filter Sign Reset
	Schedule Timer Setting
	Holiday Setting
	Temp. Setpoint Range of Remote Control
	Group Name Register
	Accumulated Operation Time
	Daylight Saving Time Setting

FEATURES AND BENEFITS

- Controls up to 64 groups of indoor units (maximum 160 units)
- Easy-to-use touchscreen interface
- Color-coded graphics for quick reference
- Set up to 10 on/off times per day
- Up to 8 Large Controllers can be connected to the H-LINK II segment
- External input/output terminals are provided as standard. External signals enable the following options:
  - Central operation/stop
  - Demand control
  - Emergency stop
  - Central operation output
  - Central alarm output

Power Specificiation	
Rated Power Supply	24VAC, 60Hz
Electrical Power Consumption	10W (Max.)

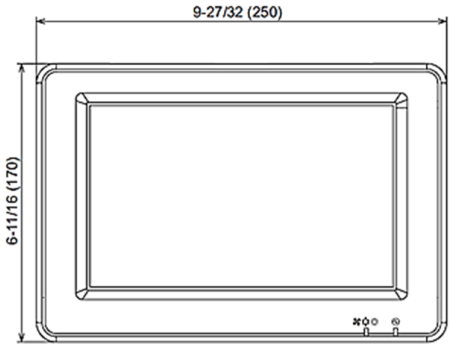

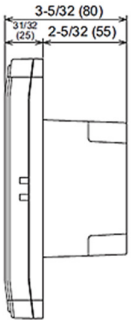

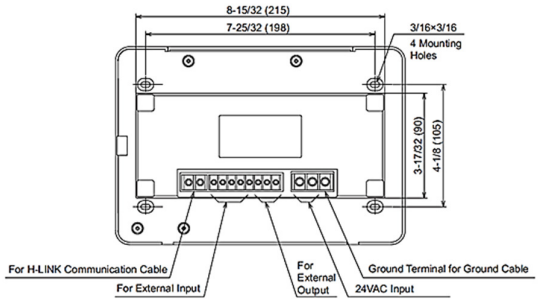

12 RT(Y,H)VAHP144B32S

Consists of one (Y,H)VAHP144B32S module.

(Heat Pump 208/230V)

FEATURES:

- All Inverter Compressors deliver maximum efficiency at part load conditions and provide comfortable individual zone control
- Large capacity single outdoor modules (up to 16 Ton) for increased flexibility, space and weight savings, and reduced piping and electrical connections
- Design flexibility with long piping lengths up to 3,280 ft. total and up to 360 ft. vertical distance between Outdoor Units and Indoor Units
- Can provide efficient heating and cooling down to -4ºF ambient air temperature. (Cooling down to 23ºF as standard and down to -4ºF with accessories installed)
- Space efficient and lightweight – provides flexibility in system layout and installation
- Maintenance friendly design of Outdoor Unit – all components accessible from the front

ACCESSORIES: (for detailed information, see VRF Engineering Manual and separate documentation for each accessory)

- Piping Kit
- Snow Protection Hood
- Protection Net
- Drain Adapter

Category		Ton			12RT	
Model (Combination)					(H,Y)VAHP144B32S	
Model (Individual)		Unit A			-	
		Unit B			-	
		Unit C			-	
Power Supply					208/230V/ 3PH 60Hz	
Capacity *1	Cooling	Capacity (Nominal)	Btu/h	(kW)	144,000	(42.2)
	Heating	Capacity (Nominal)	Btu/h	(kW)	162,000	(47.5)
Efficiency Ratings *2	Cooling	Capacity (Rated)	Btu/h	(kW)	138,000	(40.4)
		EER	Btu/Wh	(W/W)	10.9	(3.18)
		IEER	Btu/Wh	(Wh/Wh)	23.9	(6.99)
	Heating 47°F Ambient	Capacity (Rated)	Btu/h	(kW)	154,000	(45.1)
		COP	W/W		3.42	
	Heating 17°F Ambient	Capacity	Btu/h	(kW)	110,000	(32.2)
		COP	W/W		2.12	
Operating Range *3	Cooling	Indoor	°F WB (°C WB)		59(15) ~ 73(23)	
		Outdoor	°F DB (°C DB)		23(-5) ~ 118(48)	
		Outdoor (with Snow Protection Hood)	°F DB (°C DB)		14(-10) ~ 118(48)	
		Outdoor (with Cooling Damper Kit)	°F DB (°C DB)		-4(-20) ~ 118(48)	
	Heating	Indoor	°F DB (°C DB)		59(15) ~ 80(27)	
		Outdoor	°F WB (°C WB)		-4(-20) ~ 59(15)	
Cabinet Color (Munsell Code)			-		2.5Y 8/2	
Outer Dimensions	Height x Width x Depth		in		66-3/16 x 48-5/8 x 30-1/8	
			mm		1681 x 1235 x 765	
Weight	Net		lbs	(kg)	723	(328)
	Gross		lbs	(kg)	767	(348)
Connection Ratio	Standard (Extended)		%		55-130(150)	
	Max. (Recommended) Indoor Units/System			Q'ty	26 (10)	
Heat Exchanger	Type		-		Multi-Pass Cross-Finned Tube	
	Material		-		Cu-Al (Anti-corrosion)	
Compressor	Type	Inverter 1	-		AA50PHD×2	
		Inverter 2	-		-	
	Motor Output (Pole)		kW (Pole)		6.4(6)×2	
	Start Method		-		inverter	
	Operation Range		%		11 ~ 100	
	Refrigeration Oil Type		-		FVC68D	
Crank Case Heater			W×Q'ty		34.2 (230V) ×6	
Fan	Type		-		Propeller Fan	
	Motor Output (Pole)		kW (Pole)		0.39(8)×2	
	Quantity		Q'ty		2	
	Airflow Rate		cfm	(m^3/min)	9,037	(256)
	External Static Pressure *4		in.W.G.	(Pa)	0-0.32	(0-80)
	Drive		-		Direct-drive	
Electrical	Min Circuit Amps		A		58	
	Maximum Overcurrent Protective Device		A		70	
	Maximum Fuse Size		A		70	
Sound Pressure Level	Cooling		dB (A)		65	
	Heating		dB (A)		65	
Protection Devices	Cycle		-		High pressure switch at 601psi (4.15MPa)	
	Inverter		-		Over-current protection Over-heat protection	
	Compressor		-		Over-heat protection	
	PCB		-		Over-current protection	
Refrigerant	Type		-		R410A	
	Factory Charge Amount		lbs	(kg)	23.6	(10.7)
Refrigeration Oil	Factory Charge Amount		gal/Unit	(L/Unit)	2.1	(7.9)
Defrost Method			-		Reversed Refrigerant Cycle	
Main Refrigerant Piping (Heat Pump)	Gas Line		in	(mm)	1-1/8	(28.58)
	Liquid Line		in	(mm)	5/8	(15.88)

*1 Rating Conditions are based on the AHRI 1230 test standard.
*2 Efficiency ratings are based on the AHRI 1230 test standard.
*3 For more details, please refer the Engineering manual "Operation range" section.
*4 External static pressure can be changed via DSW setting 0.32 in. W.G. (80Pa).

version 20170324

Heat Pump Model: (Y,H)VAHP144B32S **System Dimensions** inch (mm)

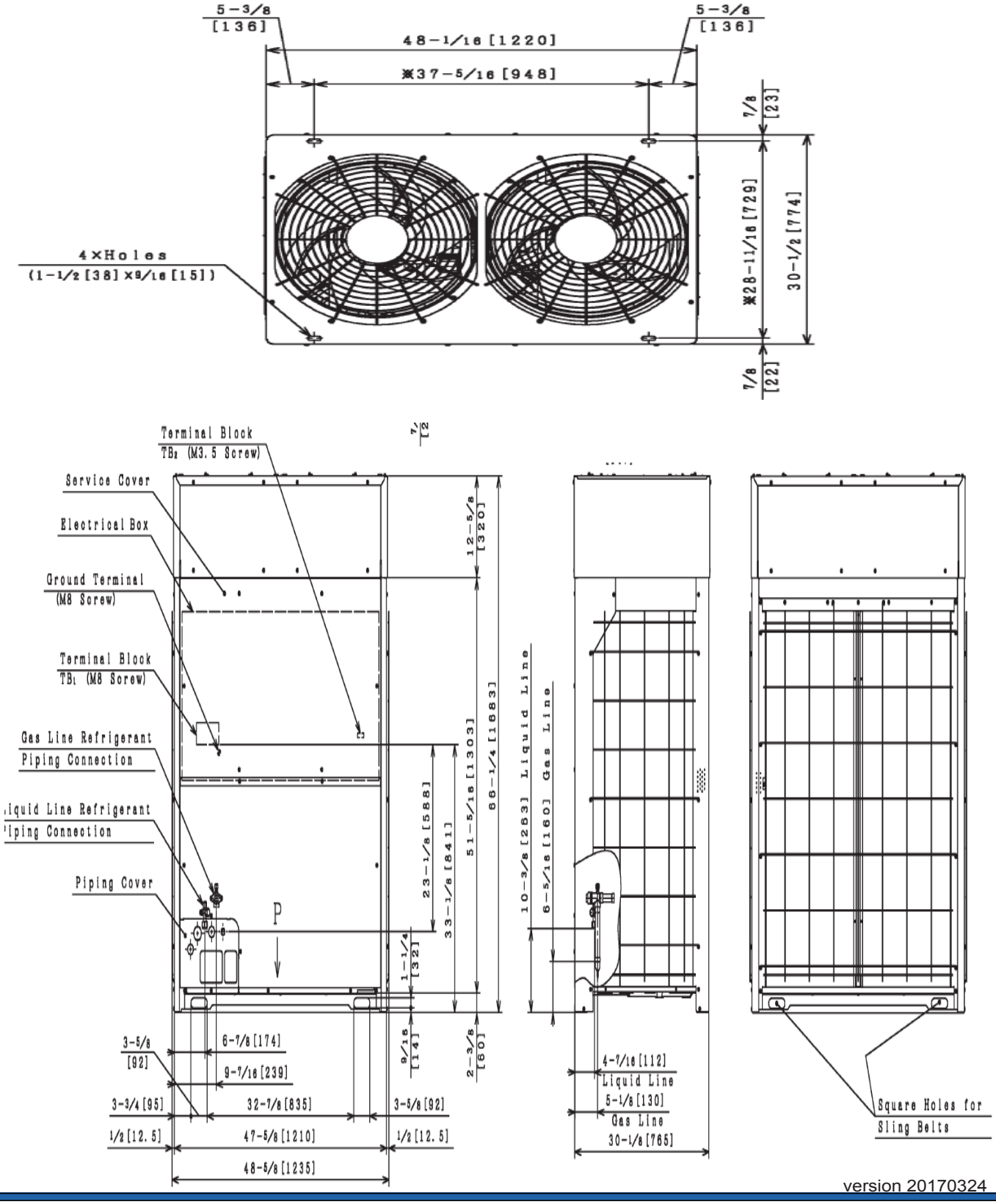

version 20170324

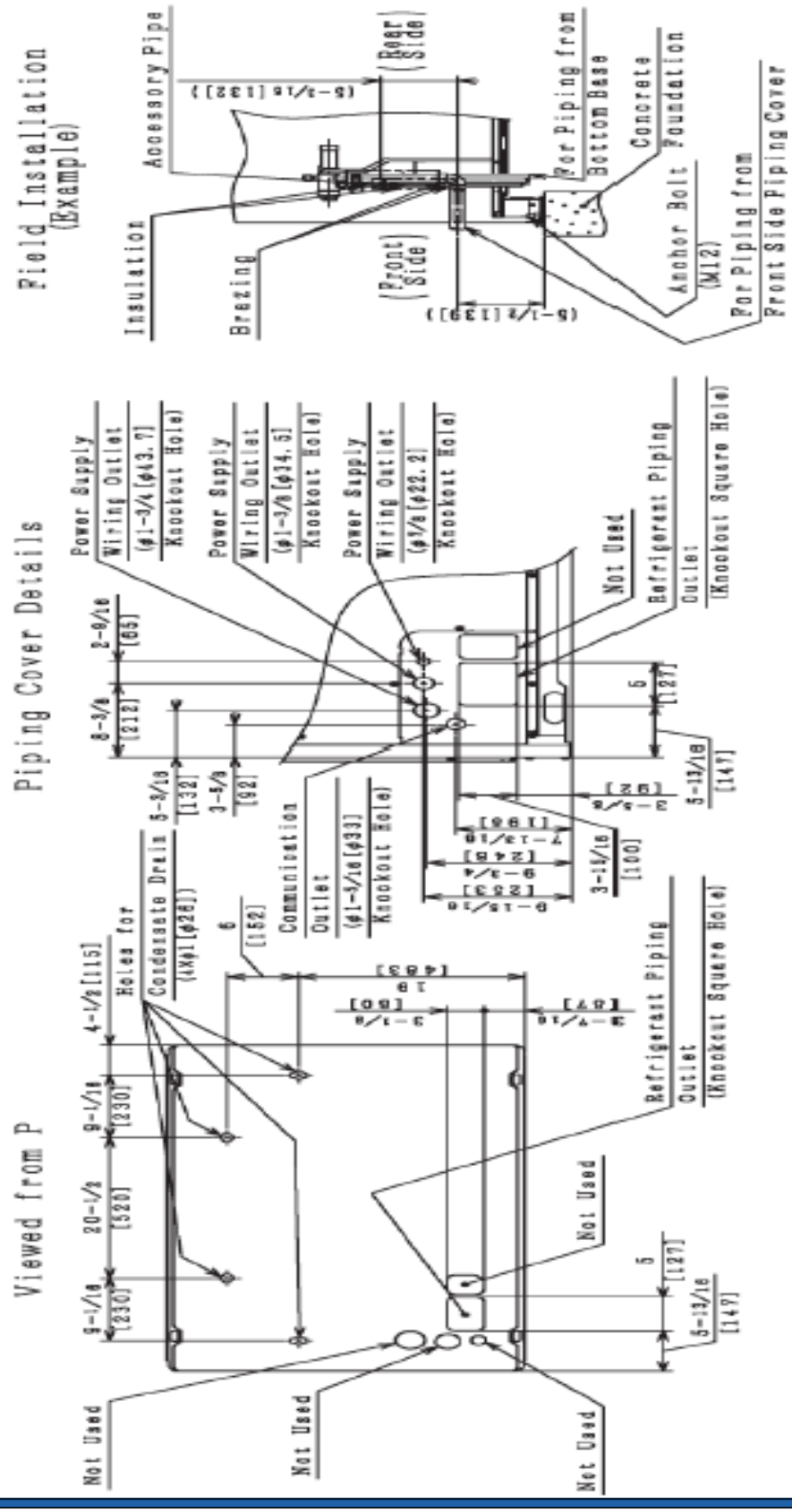

NOTES:

1. Condensation is produced by the outdoor coil during heating and defrost operation.
   1) Locate the unit where the system can be properly drained.
   2) Condensate pipe must be installed in accordance with local and national codes.
   3) Ensure the drain is sloped downward away from the outdoor for proper drainage.
   4) When the outdoor unit is installed indoors, it may be necessary to provide a secondary drain pan, condensate pump or optional drain boss for condensate management.
   5) Do not use the drain boss (optional) in locations where the drain line may freeze.
2. The dimensions marked with " * " indicate the mounting pitch dimensions for anchor bolts.

version 20170324

Piping Connection Dimensions

Unit: inch (mm)

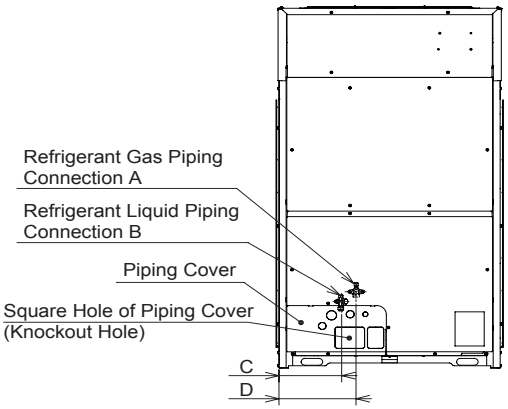

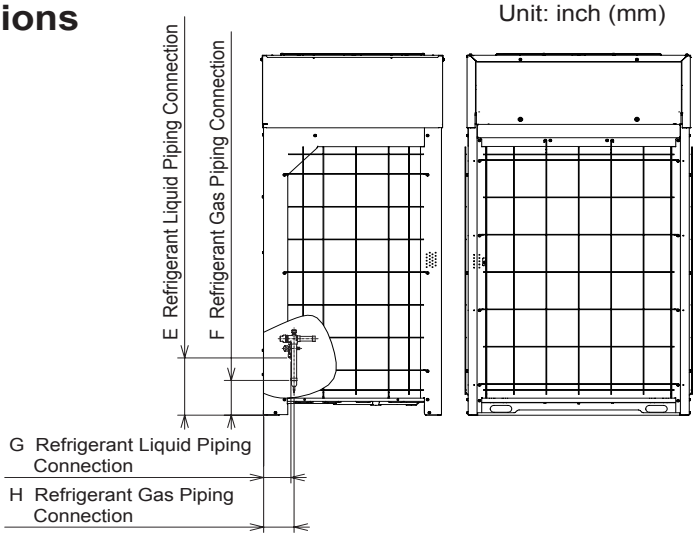

Detail of Piping Cover

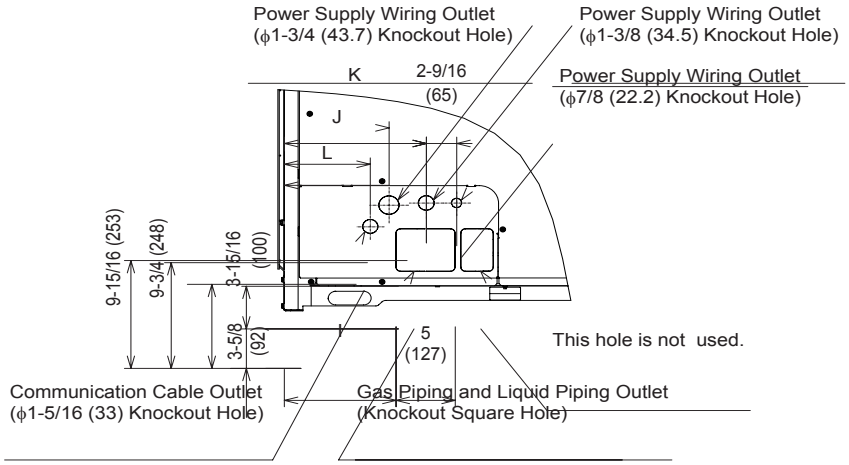

Model	Gas	Liquid	A	B	C	D	E	F	G	H	I	J	K	L
72	ϕ7/8 (22.2)	ϕ1/2 (12.7)	ϕ7/8 (22.2)	ϕ3/8 (9.52)	10-3/8 (264)	13-1/16 (331)	10-9/16 (268)	6-7/16 (163)	4-5/8 (117)	5-3/16 (131)	9-7/16 (240)	8-7/8 (225)	12 (305)	7-5/16 (185)
96	ϕ7/8 (22.2)	ϕ1/2 (12.7)	ϕ1 (25.4)	ϕ1/2 (12.7)	6-7/8 (174)	9-7/16 (239)	10-3/8 (263)	6-5/16 (160)	4-7/16 (112)	5-1/8 (130)	5-13/16 (147)	5-3/16 (132)	8-3/8 (212)	3-5/8 (92)
120	ϕ1-1/8 (28.58)	ϕ1/2 (12.7)												
144	ϕ1-1/8 (28.58)	ϕ5/8 (15.88)												
168	ϕ1-1/8 (28.58)	ϕ5/8 (15.88)	ϕ1-1/8 (28.58)	ϕ5/8 (15.88)	6-15/16 (177)	9-7/16 (239)	10-3/16 (259)	6-5/16 (160)	5-3/16 (132)	6 (152)	5-13/16 (147)	5-3/16 (132)	8-3/8 (212)	3-5/8 (92)
192	ϕ1-1/8 (28.58)	ϕ5/8 (15.88)												

Refrigerant Piping Connection and Wiring Outlet

version 20170324

Product Model: (Y,H)VAHP144B32S

Submittal Data Sheet

1.3 RT (Y, H) IFE015B21S Floor Exposed

FEATURES

- 8.7 in (220mm) depth preserves room space
- 24.8 in height leaves ample window space
- Ideal for perimeter zone air conditions

Model		(H,Y)IFE015B21S
Indoor Unit Power Supply		AC 1Phase, 208/230V, 60Hz
Nominal Cooling Capacity *1	Btu/h (kW)	15,000 (4.4)
Nominal Heating Capacity *1	Btu/h (kW)	17,000 (5.0)
Sound Pressure Level *2 (Overall A Scale)	dB	48-43-36
Outer Dimensions		
Height	in. (mm)	24-13/16 (630)
Width	in. (mm)	55-7/8 (1420)
Depth	in. (mm)	8-11/16 (220)
Net Weight	lbs (kg)	79 (36)
Refrigerant		R410A
Indoor Fan		
Air Flow Rate (Hi-Me-Lo)	cfm (m^3/min)	565-494-388 (16-14-11)
External Pressure	in.W.G (Pa)	0.0 (0)
Motor Nominal Output	W	45
Min Circuit Amps	A	0.9
Maximum Fuse Amps	A	15
Connections		
Refrigerant Piping		Flare-Nut Connection (with Flare Nuts)
Liquid Line	in. (mm)	1/4 (6.35)
Gas Line	in. (mm)	1/2 (12.70)
Condensate Drain		VP25
OD	in. (mm)	1-1/4 (32)
ID	in. (mm)	31/32 (25)

NOTES:

*1. Nominal capacity is based on combinations within the VRF system under the following conditions:

Cooling Operation Conditions

Indoor Air Inlet Temperature: 80°F DB (26.7°C DB)
67°F WB (19.4°C WB)
Outdoor Air Inlet Temperatur 95°F DB (35.0°C DB)

Heating Operation Conditions

Indoor Air Inlet Temperature: 70°F DB (21.1°C DB)
Outdoor Air Inlet Temperatur 47°F DB (8.3°C DB)
43°F WB (6.1°C WB)

Piping Length: 24 ft. 7-3/16 in. (7.5m) Piping Lift: 0ft. (0m)

*2. Sound pressure level is based on the following conditions.
4.9 ft. (1.5m) beneath the units.
The above data was measured in an anechoic chamber so that reflected sound should be taken into consideration in the field.

System Dimensions

Floor Exposed

Model: (Y, H) IFE015B21S

inch (mm)

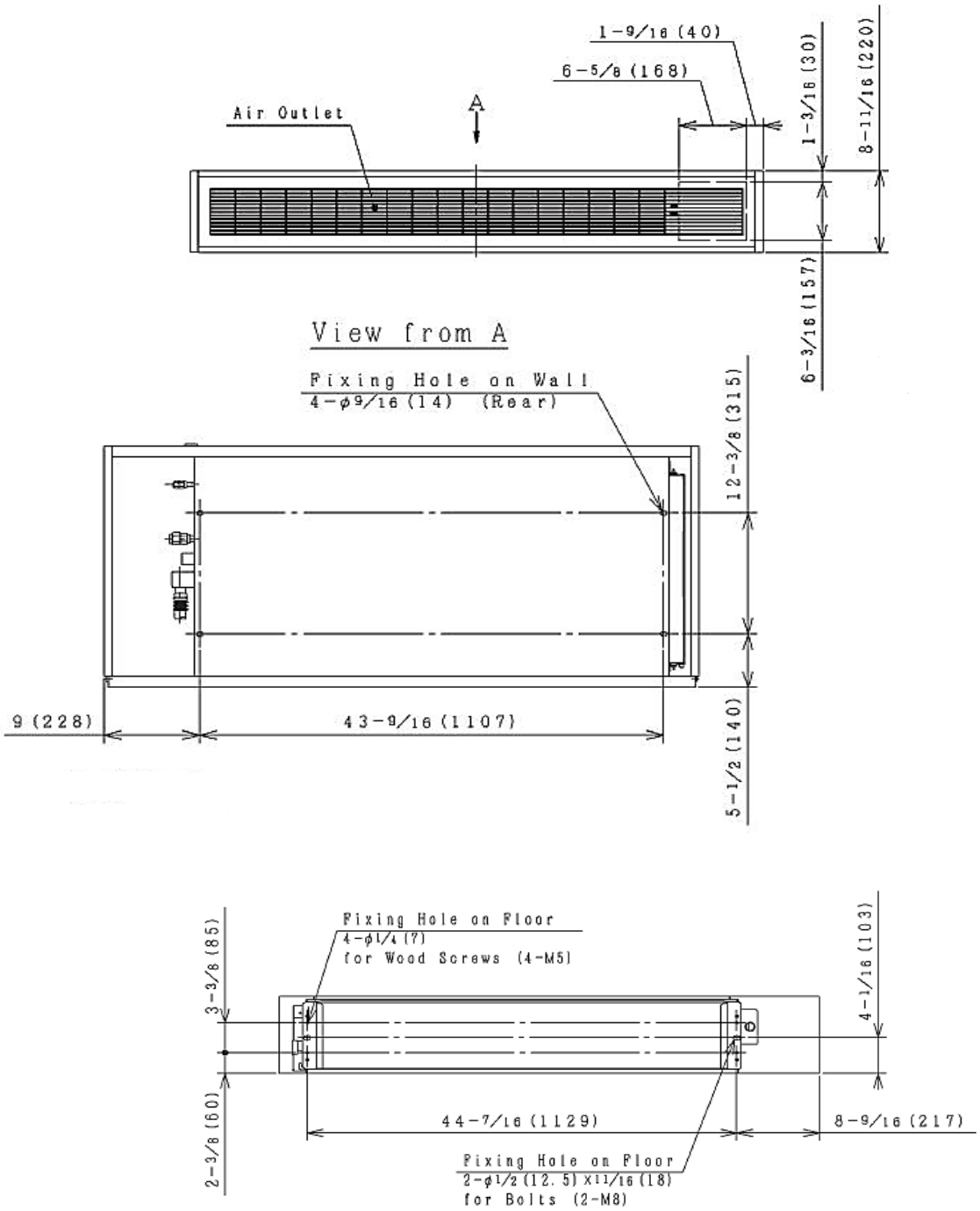

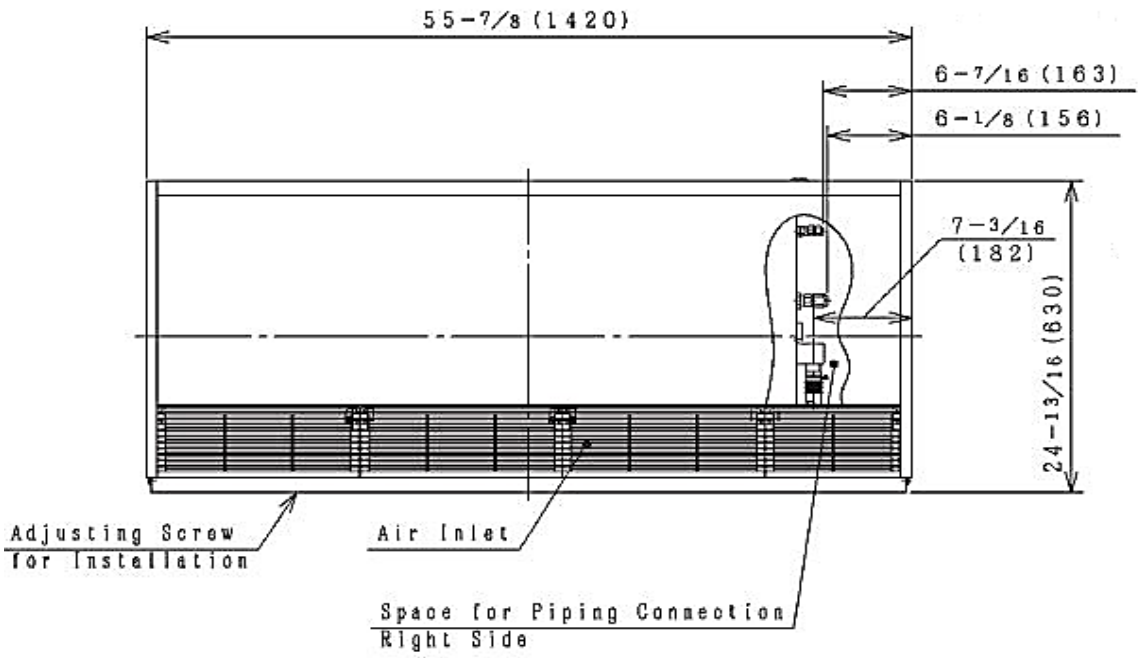
55-7/8 (1420)
6-7/16 (163)
6-1/8 (156)
7-3/16 (182)
24-13/16 (630)
Adjusting Screw for Installation
Air Inlet
Space for Piping Connection Right Side

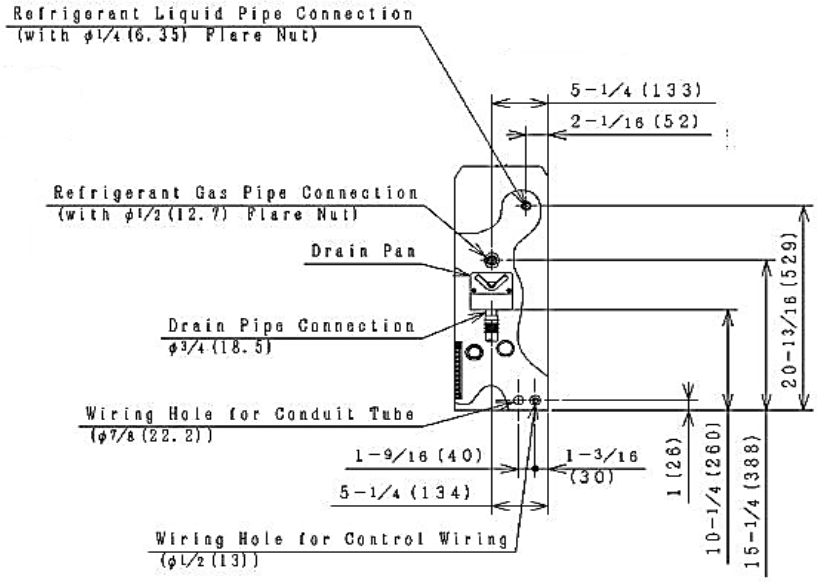
Refrigerant Liquid Pipe Connection (with φ1/4 (6.35) Flare Nut)
5-1/4 (133)
2-1/16 (52)
Refrigerant Gas Pipe Connection (with φ1/2 (12.7) Flare Nut)
Drain Pan
Drain Pipe Connection φ3/4 (18.5)
Wiring Hole for Conduit Tube (φ7/8 (22.2))
1-9/16 (40)
1-3/16 (30)
5-1/4 (134)
Wiring Hole for Control Wiring (φ1/2 (13))
20-13/16 (529)
1 (26)
10-1/4 (260)
15-1/4 (388)

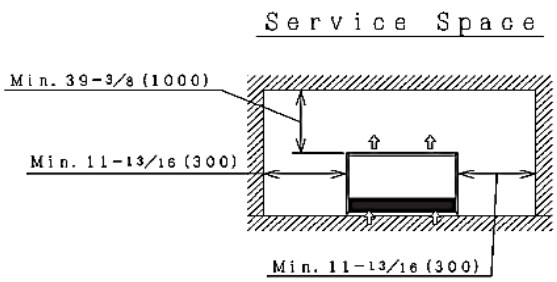
Service Space
Min. 39-3/8 (1000)
Min. 11-13/16 (300)
Min. 11-13/16 (300)

Intelli-Hood®
Melink Corporation

Product Information

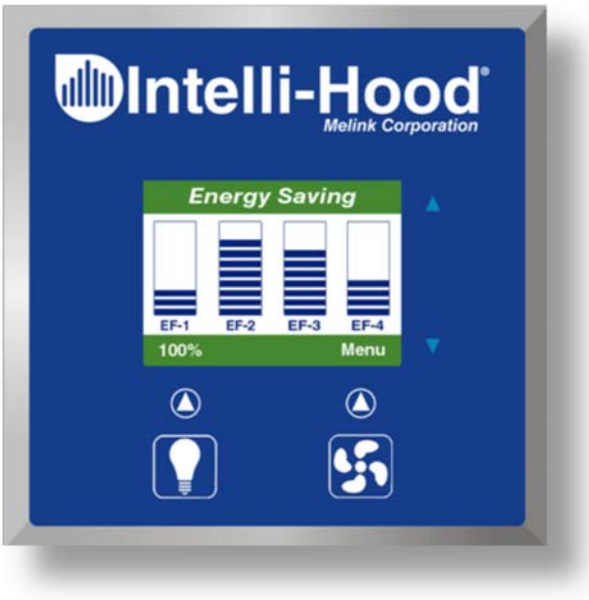

Melink®
Energy solutions for a brighter tomorrow™

●Specifications are subject to change as updates are completed●

melinkcorp.com 5140 River Valley Road Milford, OH 45150 USA 513.965.7300

Revision 180326

Intelli-Hood®

Intelli-Hood System Overview

1 SYSTEM CONTROLLER

Receives input from the Touchpad(s) and Hood Controller(s) to control the outputs for the VFDs.

2 HOOD CONTROLLER

Oversees Temperature and Optic Sensors on each hood and sends sensor data to the System Controller via RS-485 communication.

3 Touchpad

Provides switches for operation of hood lights and fans, bypass, monitoring LEDs and programming.

4 OPTIC SENSORS

Monitor the presence of smoke and vapors inside the hood. Send a signal to the Hood Controller to increase fan speed during cooking.

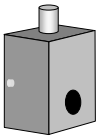

5 AIR PURGE UNITS

Miniature blowers send air into Optic Sensor housings to prevent smoke and grease from collecting on lenses.

6 TEMPERATURE SENSOR

Monitors the exhaust air temperature in the duct and sends a signal to the Hood Controller to vary fan speed in proportion to heat load.

7 VFDs

Variable Frequency Drives receive signals from the Hood Controller to control the speed of the fans based on heat and smoke load.

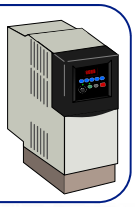

●Specifications are subject to change as updates are completed●

melinkcorp.com 5140 River Valley Road Milford, OH 45150 USA 513.965.7300

Intelli-Hood®

System Controller

Functional Description

The System Controller controls the lights and fans for up to 39 Hood Controllers. It is typically mounted above the ceiling and communicates between the hood sensors and VFDs via low-voltage Hood Network Cables. It is also connected to a Touchpad that may be mounted on the front face of one of the hoods for easy user interface.

Control Specifications

Painted enclosure for durable construction and smooth finish

Communicates to Hood Controller(s), Touchpad(s), Temp Sensor(s), and Optic Sensor(s) via proprietary RS-485 Protocol

- May communicate with up to (39) Hood Controllers, (10) Touchpads, (10) Aux Touchpads, (10) Aux Power Supplies, and (10) Aux Light Controllers. Some limitations apply.

Communicates to Variable Frequency Drives via Modbus Protocol

- Refer to VFD submittal sheet for more information
- Supports up to 64 VFDs

Programmable I/0: (3) Digital Inputs, (4) Digital Outputs, (1) Analog Output, (1) Analog Input

Adjustable Temperature vs. Fan Speed Curve

Automatic On/Off based on Hood Temperature or Clock Schedule

Versatile programming parameters for setting up exhaust and supply airflow control

Removable Memory stores setup files and operational history data

BACnet over TCP/IP Interface

Internet-based Service Application for programming and monitoring

Automatic notification of faults/alarms via BACnet and email

●Specifications are subject to change as updates are completed●

System Controller

Electrical Specifications

Input Voltage :	120 VAC to 220 VAC
Frequency :	50 Hz to 60 Hz +/- 3%
Power Consumption :	170 W
Ambient Temperature :	5 to 40°C, 41 to 104°F
Line Voltage Output Power Capacity:	15A General Purpose Load, Fused 6A Tungsten Load

Low Voltage plenum-rated, shielded cables to VFD(s), Optic Sensors, APU(s) and Temperature Sensors

Front View

Top View

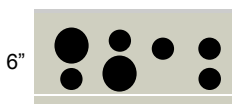

●Specifications are subject to change as updates are completed●

Intelli-Hood®

Hood Controller

Functional Description

The Hood Controller oversees Temperature and Optic Sensors on each kitchen hood and sends the sensor data to the System Controller via RS-485 communication.

Mechanical Specifications

Galvanized Steel Enclosure, 7”x7”, 2.1” tall

Temperature Rating: 0 to 49°C, 32 to 120°F

Steel Beam Clamps for installation on hoods or other mechanical structures above hood.

(4) 3/4” conduit holes for connections of Intelli-Hood Hood Network cables

(4) 3/4” conduit knockouts for connections of Intelli-Hood Hood Network cables

Electrical Specifications

Low Voltage: 24VDC from the Hood Network, via Hood Network Cables

Power Consumption: A fully loaded Hood Controller with four temperature sensors, two air purge units, and one set of optic sensors consumes approximately 15W.

Front View

7.0”

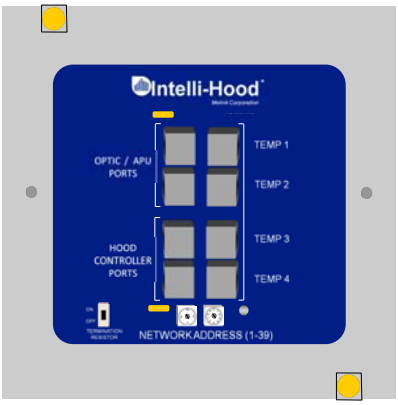

7.0”

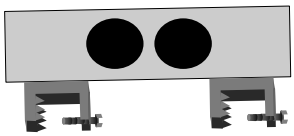

2.1”

3.3”

Side View

●Specifications are subject to change as updates are completed●

melinkcorp.com 5140 River Valley Road Milford, OH 45150 USA 513.965.7300

Intelli-Hood®

Touchpad

Functional Description

The Touchpad is the human interface point of the Intelli-Hood system. FANS and LIGHTS switches provide interface points of kitchen staff to control the hoods. A full-color screen displays the status of the fans and sensors. Setup switches provide a means of programming the system.

A System Controller may have up to ten (10) Touchpads connected to it. Programmable parameters allow the Setup Technician to dictate Touchpad and Hood relationships. Every System Controller is required to have at least one (1) Touchpad device connected to it to allow for human interface to diagnostics and programming parameters.

General Specifications

Full Color Screen: 2.5" diagonal, QVGA resolution, displays operating status and programming menus

Switches:	FANS:	Changes system from Energy Saving Mode (fans running) to Standby Mode (fans off)
	LIGHTS:	Changes state of line voltage relays which may be used to control Hood Lights circuits.
	Soft Keys:	Allow user to boost fan speeds to full speed, access programming menus, access diagnostic and help screens

Stainless steel cover plate (304L) for durable construction and smooth finish

Synthetic membrane keypad for water protection

Temperature Rating: 5 to 40°C, 41 to 104°F

Low voltage: 24VDC from the Hood Network, via Hood Network Cable

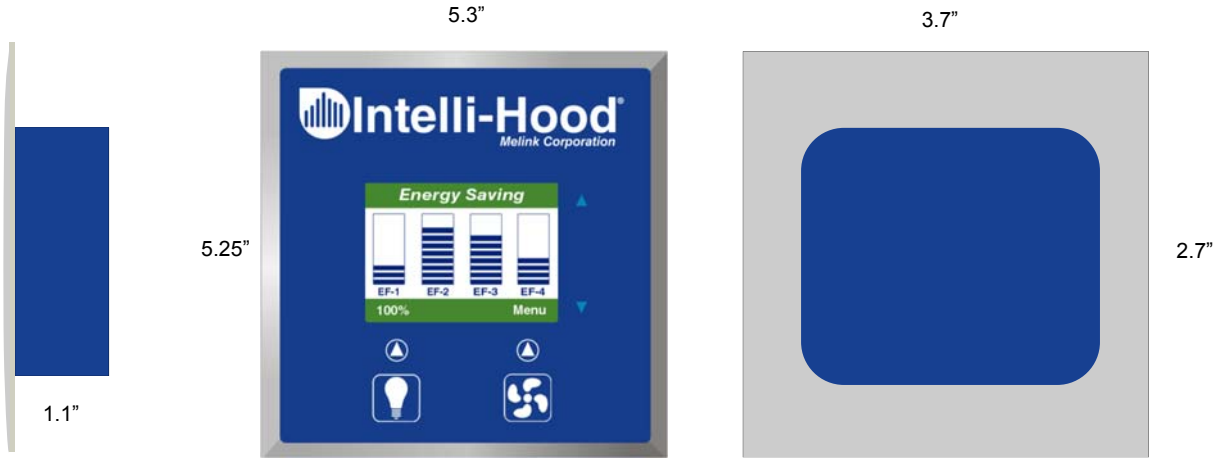

●Specifications are subject to change as updates are completed●

melinkcorp.com 5140 River Valley Road Milford, OH 45150 USA 513.965.7300

Temperature Sensors

Functional Description

A three-wire platinum resistive temperature device (RTD) sensor encased in a stainless steel tube. Threaded housing is designed to be assembled into UL-listed “Quick-Seal” exhaust duct fittings. Temperature Sensors are wired to the Hood Controllers via Hood Network Cables.

Standard sensors are installed in exhaust ducts, while Canopy sensors are installed in the hood canopy to provide enhanced automatic on/off functionality.

General Specifications

Stainless Steel Probe: 0.25” outside diameter, 2 lengths available (Standard and Canopy)

Three-Wire Configuration

Brass Body, ½” external pipe thread

8 pin, RJ-45 connector

Temperature Rating: -18 to 260°C, 0 to 500°F

RTD Rating: 100 Ohms with 0.385 platinum coefficient

Electrical Connection: Hood Network Cable

Standard

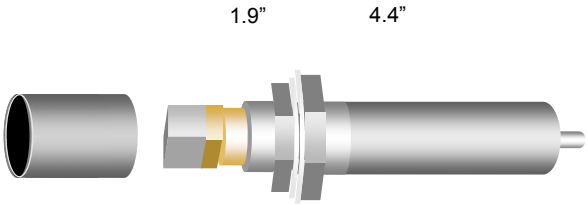

Canopy

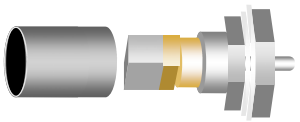

Recommended duct cut-out: 1.125” diameter.

●Specifications are subject to change as updates are completed●

Optic Sensors

Functional Description

The Optic Sensors consist of an Emitter and a Receiver which are installed on opposite ends of the kitchen hood. An infrared beam spans the length of the hood to detect any smoke or other vapors generated by the cooking appliances. Upon detection, a signal is sent to the System Controller which automatically ramps the associated fan(s) to 100% speed until the effluent is evacuated. Optic Sensors are wired to the Hood Controllers via Hood Network Cables.

General Specifications

Stainless Steel Housing for durable construction and smooth finish

Optic Span: 3 to 40 feet (automatic gain adjustment for distance)

Auto-calibration: Every day at start-up or 24 hours

Conformal-coated circuit boards and water-tight cable connectors at sensor PCB connections

Temperature Rating: 0 to 85°C, 32 to 185°F

Response Time: 0.2 seconds

Low Voltage: 12VDC from the Hood Controller, via Hood Network Cable

Ambient temperature: Max 105F purge air

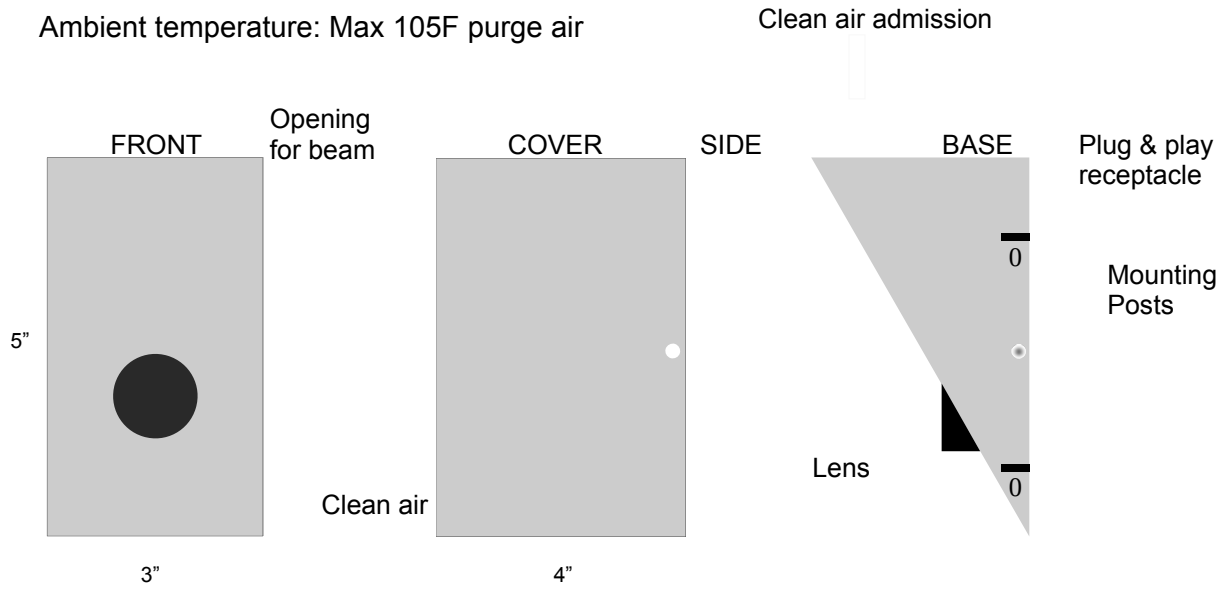

●Specifications are subject to change as updates are completed●

Air Purge Unit

Functional Description

The Air Purge Unit (APU) consists of a miniature blower in a steel box, mounted on each end of the hood above the optic sensors. The purpose of the APU is to pressurize the optic sensors housings with clean air to prevent grease vapors from fouling the lens. The blowing air also cools the optic circuit boards.

The stainless steel conduit pipe that connects the APU and Optic Sensor provides a path for the air flow and optic sensor control cable.

General Specifications

Enclosure constructed of 18 gauge galvanized steel

Adjustable support leg

Blower fan bearings permanently lubricated

Temperature Rating: 0 to 51°C, 0 to 125°F

Low Voltage: 12 VDC from the Hood Controller, via Hood Network Cable

Power Consumption: Approximately 7W

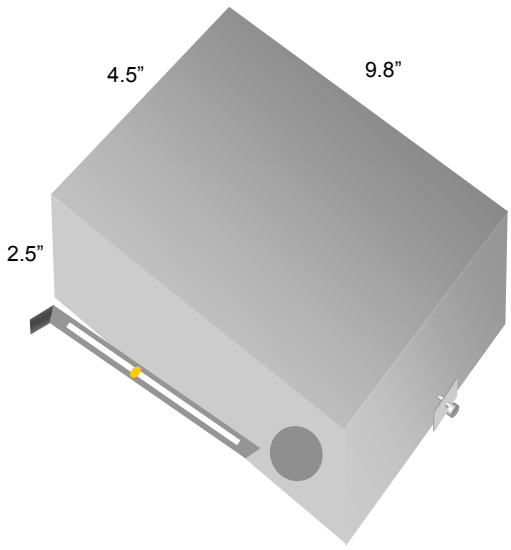

●Specifications are subject to change as updates are completed●

Variable Frequency Drive

Functional Description

The electronic motor starter is a variable frequency drive (VFD) which is used to control the exhaust and supply fan motors. The VFD modulates the speed of the fan motors by varying the output voltage and frequency based on a serial RS-485 signal received from the System Controller. The VFD also sends a feedback signal to the System Controller in order for the Touchpad to display the actual speed of the motor.

Mechanical Specifications

NEMA 1 Enclosure.

Soft-start capability.

Digital keypad displays output frequency, current, voltage, and allows programming for field modifications.

Protective Functions: motor overload, overheating, overcurrent, overvoltage, output shorts, etc.

High and low frequency limiters.

Adjustable torque boost.

Daisy-chained via Hood Network Cables

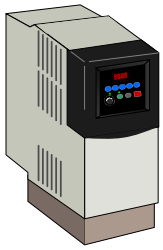

Electrical Specifications

Input Voltage :	200-240 V/1ϕ AC, 200-230 V/3ϕ AC, 380-480 V/3ϕ AC, or 460-600 V/3ϕ AC
Input Frequency :	50 Hz to 60 Hz +/- 3%
Output Voltage :	80-240 V/ 3ϕ AC or 160-480 V/ 3ϕ AC
Ambient Temperature :	-10 to 50°C, 14 to 122°F
Humidity :	20%-95% relative humidity (non-condensing)

●Specifications are subject to change as updates are completed●

Hood Network Cables

Functional Description

Custom 8-conductor cables connect the various components of Intelli-Hood. The cable is shielded, plenum rated, UL Type CMP OR CL3P FT-6. Per NFPA 70, the cable is allowed to be run in horizontal plenums and vertical chases without conduit when carrying current-limited low-voltage power and signals as it does with the Intelli-Hood.

Construction Specifications

UL TYPE OR STYLE:	CMP OR CL3P FT-6
PRIMARY INSULATION TYPE:	SGPVC
JACKET THICKNESS:	.015"
JACKET COLOR:	NEON GREEN
JACKET MATERIAL:	CMP
NOMINAL O.D.:	0.190"
TEMP. RATING:	60C
CONDUCTOR/PAIR COUNT:	4 PAIRS
INSULATION THICKNESS:	0.007"
GAUGE & STRANDING:	24 AWG, 7/32 BC
VOLTAGE RATING:	300V
SHIELD:	FFE ALUMINUM POLYESTER
DRAIN WIRE:	24 AWG, 7/32 TC

Stock Pre-Terminated Lengths

2CB3-001: 1’ (0.3m)
2CB3-005: 5’ (1.5m)
2CB3-015: 15 (4.5m)
2CB3-030: 30’ (9.1m)
2CB3-050: 50’ (15.2m)
2CB3-100: 100’ (30.5m)
2CB3-200: 200’ (61m)

●Specifications are subject to change as updates are completed●

Aux Touchpad

Functional Description

The Aux Touchpad is an additional human interface point of the Intelli-Hood system. FANS, LIGHTS, and 100% switches provide interface points of kitchen staff to control the hoods. Indicator LEDs provide status for the FANS, LIGHTS, 100%, and Faults.

A System Controller may have up to ten (10) Aux Touchpads connected to it. Programmable parameters allow the Setup Technician to dictate Aux Touchpad and Hood relationships.

General Specifications

FANS Switch: Changes associated Hoods between Active Mode (fans running) to Standby Mode (fans off)

LIGHTS Switch: Changes state of associated line voltage relays which may be used to control Hood Lights circuits.

100% Switch: Allows user to temporarily boost fan speeds to full speed on associated Hoods.

Stainless steel cover plate (304L) for durable construction and smooth finish

Synthetic overlay for water protection

Low Voltage: 24VDC from the Hood Network, via Hood Network Cable

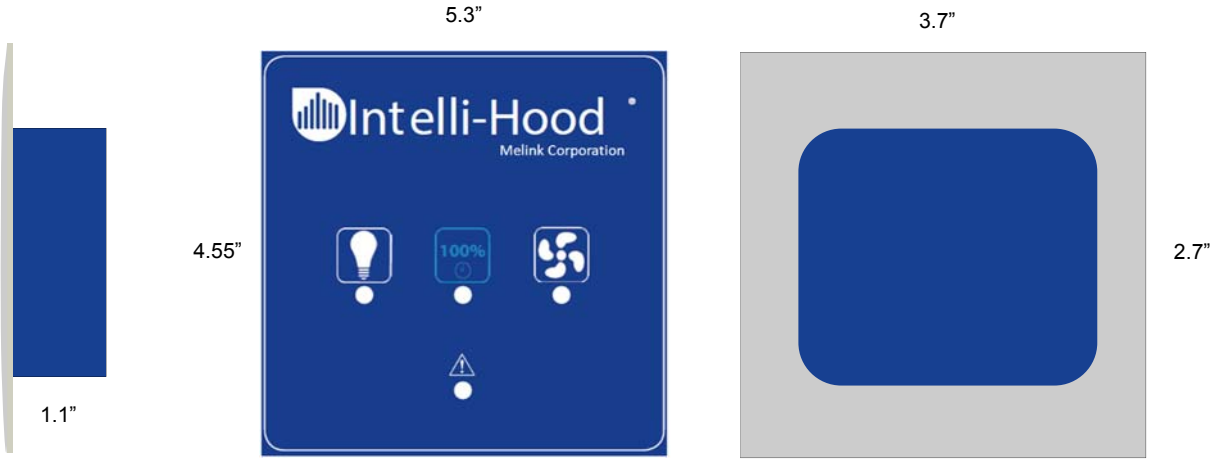

●Specifications are subject to change as updates are completed●

Aux Power Supply

Functional Description

The Aux Power Supply (APS) may be used for large installations additional power is needed to operate Hood Controllers, Optic Sensors, and Touchpads. Since each Hood Network Port is power-limited, depending on the quantity of devices in a series line and the length of cable between devices, Aux Power Supply Device(s) may be needed to provide power to the Hood Network.

A System Controller may have up to 10 Aux Power Supplies connected to it.

Electrical Specifications

Input Voltage :	120 VAC to 220 VAC
Frequency :	50 Hz to 60 Hz +/- 3%
Output Voltage:	24VDC
Frequency :	50 Hz to 60 Hz +/- 3%
Power Consumption :	60W (max)
Ambient Temperature :	5 to 40°C, 41 to 104°F
Hood Network Connection:	24VDC from the Hood Network, via Hood Network Cable

Front View

7.0”

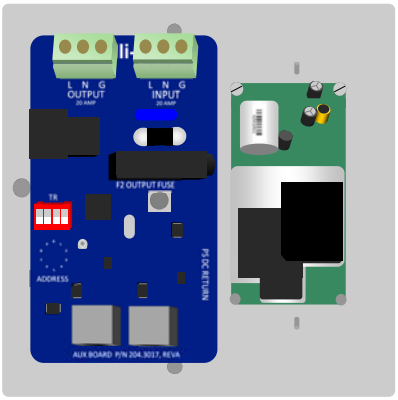

7.0”

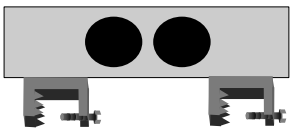

2.1”

3.3”

Side View

●Specifications are subject to change as updates are completed●

Aux Lighting Controller

Functional Description

The Aux Light Controller (ALC) may be used for large installations where there is a need to control multiple light circuits. A System Controller may have up to 10 Aux Light Controllers connected to it. Relationships among the ALC and Touchpads are programmable via field editable parameters.

A System Controller may have up to 10 Aux Lighting Controllers connected to it.

Electrical Specifications

Input Voltage :	120 VAC to 220 VAC
Frequency :	50 Hz to 60 Hz +/- 3%
Power Consumption :	5W (not including lights)
Ambient Temperature :	5 to 40°C, 41 to 104°F
Hood Lights (voltage matches input):	120 VAC to 220 VAC (15A max)
Line Voltage Output Power Capacity:	15A General Purpose Load, Fused 6A Tungsten Load

Front View

7.0”

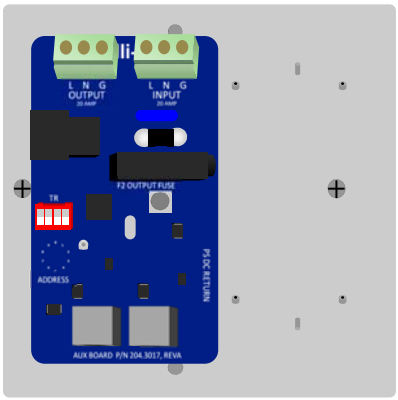

7.0”

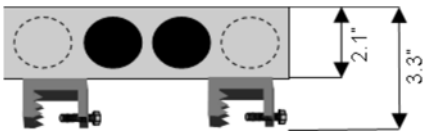

Side View

●Specifications are subject to change as updates are completed●

Copeland™
brand products

Stream - The State Of The Art Semi-Hermetic Piston Technology

EMERSON™
Climate Technologies

Pioneering Technologies And Global Expertise

For more than 80 years we have been introducing pioneering technologies to the market, from the first semi hermetic and hermetic compressor in the 1940s and 1950s, to the brand new and high efficiency semi hermetic "Stream "and scroll compressors of nowadays. With our strong investment in R&D and in product engineering combined with technically superior products from our industry leading brands such as the Copeland™ brand products, Alco Controls, Dixell and Vilter we provide for continuous improvement and innovation. Completed by a global network with strong resources turning our experience and expertise into market driven solutions we are managing the challenges of today and tomorrow.

1957
Production of the 1st semi-hermetic Copeland™ compressor

1983
Production of the 1-millionth semi-hermetic Copeland™ compressor in Europe

1986
Launch of Discus™ technology in Europe

2008
Foundation of a high-tech production & engineering centre for semi-hermetic technology in Czech Republik

2011
Sales of 11 million semi-hermetic compressors worldwide

2012
Production Launch of Stream

Challenging Applications Require Superior Technologies

Staying abreast of the market´s challenges Emerson continues to develop and improve its compressor technologies: scroll as well as semi-hermetic reciprocating. Especially in the commercial refrigeration segment where the spectrum of applications is a broad one with more customized system requirements a selection of both technologies is of utmost importance.

While scroll technology with developments such as vapor injection, digital modulation and compact design plays it strength in smaller retail businesses, the semi-hermetic reciprocating technology is the perfect fit for large scale commercial refrigeration.

For these applications the necessity to be easily serviced, remanufactured and the ability to implement capacity unloading mechanisms are of major importance. With its new Stream compressor range comprising innovations as digital modulation, multi refrigerants and CoreSense™ Diagnostics for advanced protection and preventive maintenance Emerson is at the forefront of semi-hermetic compressor technology.

The fact is whatever requirements and applications are requested, Emerson is able to offer the best solution and the best performance: with either semi-hermetic or scroll compressor technology.

Features & Benefits

Scroll Technology
- Effective equipment costs
- High seasonal efficiency
- Simple digital continuous modulation
- Light and compact, ideal for condensing units, compact racks and distributed systems
- Reliability with ability to handle liquid slugging

Semi-Hermetic Technology
- Applications requiring individual compressor repairability
- Ideal for central machine room installations
- Perfect for large central refrigerant plant
- Product and design maturity
- Integrated electronics for advanced protection and diagnostics

Sales of 100 million scroll compressor worldwide

2012

Stream Technology And Its 5 Key Benefits

Diagnostics

CoreSense™ Diagnostics technology helps your refrigeration equipment last longer. This technology offers advanced compressor protection, diagnostics, communication and power consumption measurement.

Efficiency

Its unique valve technology makes Stream 10% more efficient than any other compressor and therefore helps you reduce the carbon footprint and running cost of your installation.

Multi Refrigerant

Its unique valve technology makes Stream a multi refrigerant compressor. One model suits all applications without any compromise on performance.

Modulation

Digital technology or operation with inverter makes Stream the most flexible choice for continuous capacity modulation.

Low Sound

Sound shell technology makes Stream the quietest compressor on the market for sound critical applications.

Stream - A Broad Family For The Perfect Application Fit

Stream For HFC Refrigerants

Our Stream range provides best in class performance for today's commonly used HFCs and uprising low GWP refrigerants. The result? Significantly smaller cost of operation and reduced environmental impact compared to competing products.

The range comprises 4 and 6 cylinder models that are qualified for inverter applications as well as 4 and 6 cylinder digital models for continuous cooling capacity modulation. The compressors can be fitted with a dedicated sound shell for sound sensitive applications.

Stream 4 cylinder

Stream 6 cylinder

Digital Stream 4 cylinder

Digital Stream 6 cylinder

Stream sound shell

Stream For R744 Refrigerant - Transcritical

The Stream series comprises three models of 4 cylinder compressors for R744-transcritical applications and is the ideal solution for R744 medium temperature cascade and booster systems.

It is characterized by a design pressure range of 135 bar. Refrigerant flow and heat transfer have been optimized for best performance. These models are released for operation with frequency inverters.

Stream for R744 transcritical

In combination with the R744-subcritical scroll for the low temperature refrigeration side, Emerson Climate Technologies offers the most energy efficient package available on the market today.

CoreSense™ Diagnostics

All Stream models feature CoreSense Diagnostics offering advanced protection and diagnostics benefits for excellent system reliability, reduced service costs and increased equipment uptime.

With CoreSense technology, service engineers can now diagnose system-related problems faster or even before they occur to keep the refrigeration system in optimum condition over its entire lifetime.

CoreSense™ Diagnostics module

Diagnostics

CoreSense™ Diagnostics - Your Finger On The Pulse

Recent trends show us that intelligent electronics are becoming more and more important when it comes to energy savings, cost optimization, increased system uptime and reduced lifecycle costs. The combination of an intelligent and user-friendly diagnostics tool in one technology is an ideal and unique solution.

Emerson Climate Technologies now offers this brand new and unique solution with its CoreSense™ Diagnostics for refrigeration. as a standard to all Stream compressors.

How it works

CoreSense technology with proprietary algorithms uses the compressor as a sensor to unlock the information inside the machine and provides value-added features such as advanced motor protection, diagnostics, communication and verification.

What It Means To You

Therewith it helps customers identify and address potential problems in a quick and efficient way thereby improving compressor performance and reliability.

The monitoring of the compressor power consumption and crankcase heater control are other value-added features of CoreSense.

Intelligent CoreSense™ Diagnostics Add Value To Your System

What It Means To You

Advanced Motor Protection

Using proprietary algorithms, CoreSense goes beyond conventional basic motor protection. It protects the compressor from severe damage-causing failures like locked rotor, single phasing and voltage imbalances. Furthermore CoreSense provides discharge temperature protection.

CoreSense not only protects the compressor from these critical failures but also displays, stores and communicates this information to the customer and to responsible service technicians, so that the problem can be quickly diagnosed to avoid system downtime and food loss.

Diagnostics

The diagnostics feature of CoreSense provides the compressor alarm history and running status information. EEPROM memory in the CoreSense module stores the complete failure history including asset information of the compressor (serial number and model number of the compressor). The customer can access the information directly on site using the pack controller display or CoreSense PC interface software. This software is either installed on the service laptop or on a remote computer with access via Modbus communication.

The alarm history is stored in different ways:

- 8-day history of alarms showing the number of occurrences per day
- The most recent 10 alarms
- Accumulated number of failures since the compressor was first put into operation
  - Compressor running status information
  - Number of compressor running hours, alignment starts, resets and type of resets
  - Number of compressor running hours without insufficient oil pressure

Communication

The communication feature of the CoreSense module provides access to information like alarm history, operating parameters and the running status for a pack controller with open Modbus protocol.

It enables remote reset capability and remote monitoring of the compressor information with no requirement of actually visiting the site. An easy-to-access and user-friendly Dixell web server interface for pack controller. Dixell iProRack allows customers to read the CoreSense information remotely with a graphical interface.

In addition we offer a PC interface software for a direct service laptop connection to the CoreSense module. This enables access to CoreSense module information directly on site such as compressor operating information and alarm history.

CoreSense communication Example with Dixell iProRack

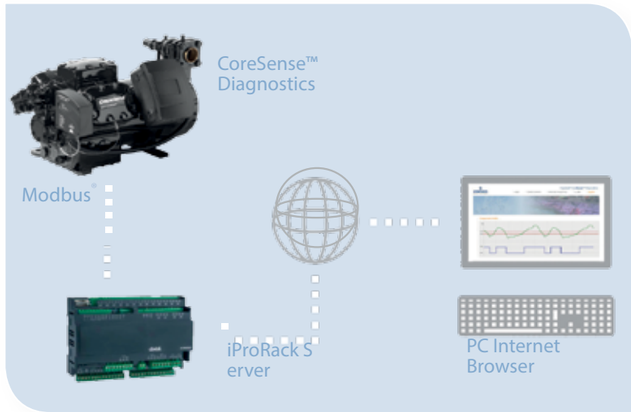

How It Works

CoreSense Architecture

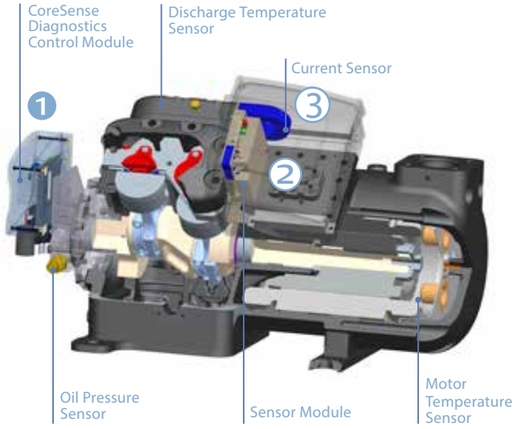

1 CoreSense Control Module

- Motor overheat protection
- Oil protection
- High discharge temperature protection
- Communication to pack controller via Modbus
- Sensor module communications
- Compressor proofing
- EEPROM memory
- Alarm history, operating history
- Local and remote reset capability
- Multi-color LEDs to indicate alarms

2 Sensor Module Inside the T-Box

- Reads and processes phase voltages by using voltage sensing leads and current sensor module
- Supplies information to CoreSense control module
- Acts as a slave to CoreSense control module
- Sensor module offers the following features:
  - Locked rotor
  - Low voltage
  - Single phasing
  - Voltage imbalance
  - Crankcase heater control
  - Power consumption monitoring protection

3 Current Sensor inside T-Box

- Reads current values as an input for the sensor Modules

CoreSense Diagnostics Features

- Basic Protection
  Against Motor overheat and insufficient oil protection
- Advanced Motor Protection
  Against single phasing, locked rotor, voltage imbalance and protection of discharge temperature and low-voltage
- Diagnostics
  Alarm history, compressor operating history, compressor running status information
- Communication
  From the CoreSense to a pack controller using open Modbus protocol
- Advanced features
  Power consumption measurement (voltage, current; power factor measurement), remote reset capability, crankcase heater control

What It Means To You

- Improved compressors reliability and performance
- Easy preventive maintenance using the diagnostics features
- Avoidance of refrigeration system downtime and food loss
- Reduced applied system costs
  - Factory installed devices: Oil protection sensor and the discharge temperature sensor are installed and connections are already made in the factory
  - Crankcase heater control is integrated in CoreSense
- Remote access to the compressor data, running status and possibility to reset alarms without visiting the installation site
- Multi-color LEDs on the module help to find any compressor issue quickly
- Power consumption monitoring of the compressor to analyze the energy costs of the compressor

More Efficient With Stream

Environmental impact and energy consumption is at the center of every discussion relating to sustainable refrigeration. Retailers face important challenges as they strive to find the right balance between ecological and economical aspects. Therefore energy efficiency is always under scrutiny as it impacts both the carbon footprint and the costs relative to an installation.

Efficiency is at the forefront of new product designs at Emerson. The introduction of Discus™ compressors in the past and the launch of Stream prove this.

Stream With Discus Valve Technology What It Means To You

Thanks to the unique Discus valve technology, significant savings can be made using Stream compressors. It is the key difference between Stream and conventional reciprocating technologies available on the market. The valve technology is at the heart of the efficiency advantage of Stream.

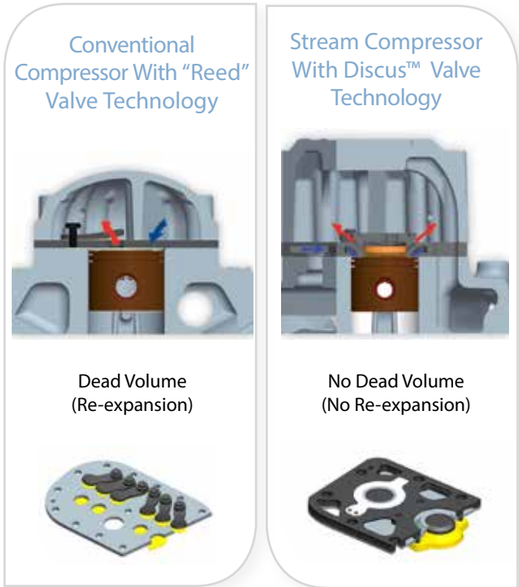

Figure 2: Key difference between conventional reed and Discus valve technology

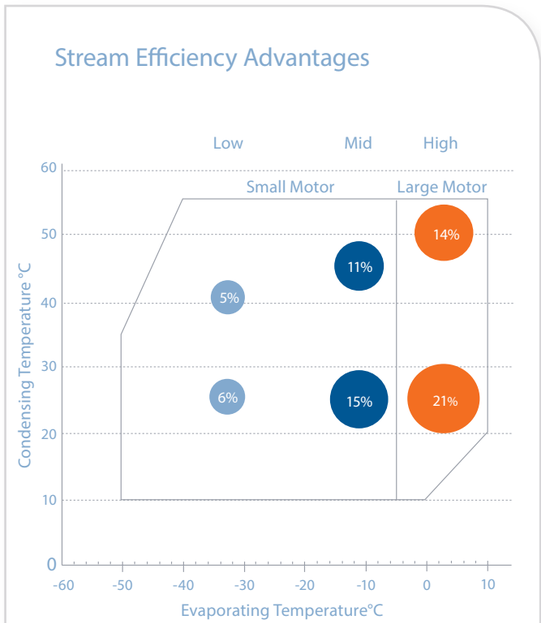

Figure 1: R404A efficiency advantages of Stream versus the next best competitive model at different running points of the envelope.

How It Works

The unique valve technology allows gas to flow into the cylinders with minimum heat gain while suction cavities are designed to smoothly route the gas to minimize losses. This leads to a superior capacity and efficiency of the compressor compared to conventional reed type compressors, giving customers much more efficiency.

Discus Valve Technology

The Discus technology takes its name from the conical discharge valve. When closed, the valve remains flush with the valve plate reducing the clearance volume to an absolute minimum when the piston is at the top of the cylinder (as shown in figure 2, right side). With a conventional machine, the reed suction valve prevents the piston coming close to the top of the cylinder causing additional "dead volume" in the discharge ports of the valve plate (figure 2, left side).

Leveraging An Unequalled Technology To Make It Even Better

By leveraging and improving the Discus valve technology, the new Stream features a series of design characteristics that make it even more efficient:

- Valve plate with large suction and discharge gas areas to minimize losses
- Optimized gas distribution in suction area
- Improved motor cooling with side body bow for larger passageways
- Refrigeration optimized motor selection

Our Selection Tool - Your Efficient Choice Of Compressor

Emerson selection software "Select" offers a number of dedicated tools to help OEMs, contractors and end-users select the best compressor technology in terms of energy efficiency. All the parameters of a refrigeration system can be defined to perform energy simulations and comparisons between several solutions.

Simulation Study - Done With Selection Software Tool

Result of a compressor energy comparison analysis

Parameters:
- Stream vs next best comparable compressor
- Medium temperature pack application with 5 compressors
- Location of application: Brussels
- Refrigerant: R404A

Result:
- 15% Reduction of energy costs using Stream.
- 50.700 kWh/ year or 5000 €/ year savings (0,1 €/kWh)

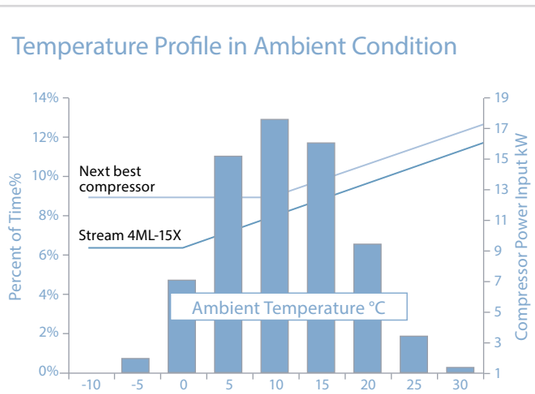

Figure 3: Temperature profile in Brussels and single compressor power input in function of ambient condition (Stream 4ML-15X with R404A).

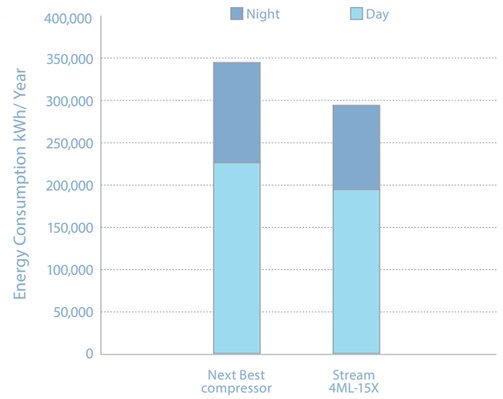

Figure 4: Comparison between Stream and next best compressor.

One Compressor - Multiple Applications At Best Efficiency

Today's most commonly used refrigerant is R404A. Improving system architectures, changing compressor technology or moving to a refrigerant with a lower Global Warming Potential (GWP) can significantly improve the carbon footprint of an installation.

Moving from R404A to R134a is one of many ways to reduce the GWP (from 3922 to 1430). While this requires a compressor of bigger displacement for the same capacity, the GWP is reduced by 64% and the system's efficiency is improved.

A recent trend shows that compressor manufacturers "optimize" their valve plate design to the refrigerant it will be used with. This leads to a better efficiency but creates product complexity and proliferation for equipment manufacturers and wholesalers.

Stream With Discus™ Valve Technology What It Means To You

The Stream valve plate is designed to provide the best efficiency level whatever the refrigerant. In fact, the same Stream model provides an efficiency advantage of more than 10% over market level when using refrigerant R404A while still outperforming so called R134a dedicated compressors from other manufacturers (shown in figure 5). The benefits are:

- One model fits all refrigerants (Universality)
- 50% less models to handle
- Easier logistics & lower stock levels
- Less variations of refrigeration equipment
- Compressors easier to service and replace

All Stream models are released with R404A, R134a, R407F, R407A, R407C and R22.

How It Works

The discharge valves of a compressor generate two types of losses:

- The pressure drop through the valve: at equal opening and closing timing, the valve that opens the most generates the least pressure losses

Efficiency Comparison

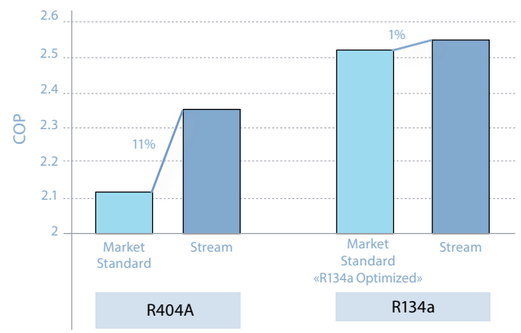

Figure 5: Example at condition -10°C/45°C/20°C SGRT: Stream 4ML-15X for R404A and R134a versus a standard compressor and "R134a Optimized" competitive models.

- The re-expansion volume of compressed gas in the compression chamber – the larger the re-expansion volume, the larger the losses.

With a reed design a compromise has to be found between these two losses: the larger the valve, the lower the pressure drop but the higher the re-expansion.

With Stream there is no need for a compressor design dedicated to each refrigerant. Multi-refrigerant valve technology offers the best compressor performance whichever the refrigerant.

A reed valve is sensitive to gas density and velocity through the valve so a compromise must be made for the given refrigerant and the condensing point. As a result a design optimization that targets an efficiency improvement at low condensing will create deterioration in high condensing.

With a Discus valve technology, the larger the valve, the lower the pressure drop. As the valve is integrated in the valve plates there is no re-expansion volume. By designing the valve to the largest size allowed by the valve plate, the optimum is reached regardless of the refrigerant and operating condition. There is no compromise to make in Stream.

Conventional Reed Valve Plate

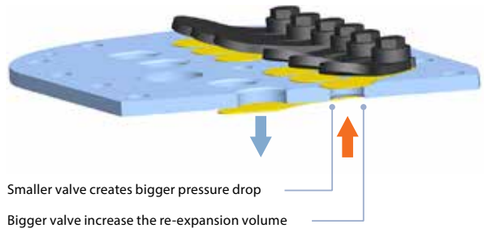

Figure 6: The reed valve type forces a design compromise between pressure drop and re-expansion volume making it impossible to achieve optimized efficiency for all refrigeratn and operating points. A dedicated refrigerant design is necessary.

Discus Valve Technology

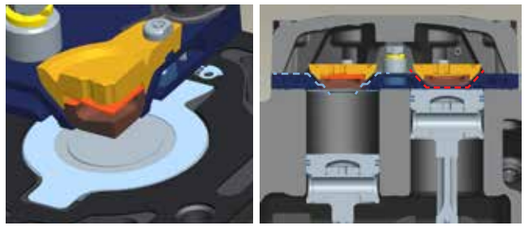

Figure 7: With the Stream design, a larger discharge passage will not increase re-expansion volume leading to the highest efficiency whatever the refrigerant and operating point. A dedicated refrigerant design is not necessary.

Our Simulation Tool - Your Efficient Choice Of Refrigerant

Refrigerant choice, system architecture design and compressor technology are key factors that determine the environmental impact of an installation. Minimizing the impact on climate change through responsible energy use and reduced carbon footprint are key objectives at Emerson.

Emerson carried out a study to provide guidance to end users, consultants, contractors and installers in the complex decision-making process of specifying supermarket cooling systems. It focuses on the refrigerant while taking into account the system architecture and technologies that have an impact on energy consumption, the carbon footprint and investment costs. Supermarkets were chosen in this study as they offer the greatest potential to integrate the latest design principles in order to improve environmental performance.

The results of the study are summarized in our report «Refrigerant Choices for Commercial Refrigeration» avaiable at www.emersonclimate.eu. The simulation tool ***The Right Balance Calculator*** for individual refrige-rant choices and their impact on installations is also available on our website

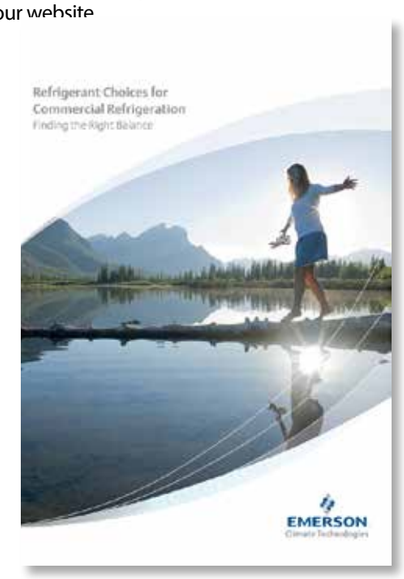

One Compressor - Two Modulation Options

There is a common goal shared by many in refrigeration: preserve and display food at safe temperatures and reasonable operating cost. Varying the capacity available to meet the load is the most significant way to achieve this objective. This ability leads to a more stable temperature in the refrigerated areas and does so at favorable power consumption since producing excess capacity is avoided.

What It Means To You

All Stream compressors are released for applications using inverter technology. In addition, and in an effort to give technology options to the refrigeration industry, Emerson Climate Technologies introduces Digital technology. Digital technology is used worldwide on scroll compressors installed in many refrigeration applications and has proven to be the simplest and most reliable means of continuous capacity modulation. Digital is also now available on Stream semi-hermetic reciprocating compressors.

Digital Modulation How It Works

A high-cycle solenoid valve is fitted on the cylinder head of the compressors and actuates a piston that controls the flow of gas into the suction area of the Stream valve plate.

When cooling capacity is required and during the normal compression process, refrigerant flows through the valve plate, past the suction reed, and into the compression cylinders. While in the cylinders, the gas is compressed to a higher pressure before being discharged past the valve and into the head. This is known as the "loaded state".

When less cooling capacity is required, by interrupting the refrigerant flow into the cylinders, there is no compression taking place. By controlling the time when actual compression is taking place, the capacity output of the Stream Digital compressor can be adjusted.

This new approach to capacity control is simple to integrate into equipment design and extremely reliable. The digital cylinder banks can be retrofitted to existing compressors.

On a 4-cylinder compressor, one cylinder bank is fitted with a simple solenoid valve mechanism that actuates 2 pistons. These pistons block the gas from entering the compression area. When less cooling capacity is required, an interruption of the refrigerant flow into the cylinders stops the compression taking place. By controlling the opening and closing cycle time of these pistons via a panel mounted digital driver, the compressor capacity will modulate from 50 to 100%.

On a 6-cylinder compressor, one cylinder bank is fitted with a solenoid mechanism as described above while the other cylinder bank is fitted with a standard on/off capacity unloader. The result is a range of continuous capacity modulation from 33 to 100%.

Stream - The Choice Is Yours

Frequency Modulation

- Dedicated refrigeration inverters from Control Techniques

Emerson inverter

Digital Capacity Modulation

- 4 cylinder compressor: 50 to 100% modulation
- 6 cylinder compressor: 33 to 100% or 67 to 100% modulation

Loaded State

Refrigerant Flow:
1. Refrigerant enters compressor
2. Passes through body
3. Into the valve plate
4. Compressed by pistons
5. Exits compressor

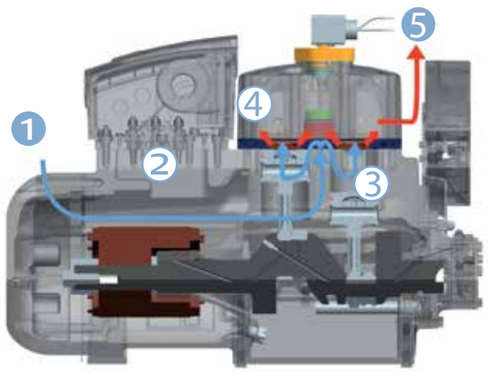

Unloaded State

Refrigerant Flow:
1. Refrigerant enters compressor
2. Passes through body
3. Unloader mechanism blocks gas before entering the valve plate

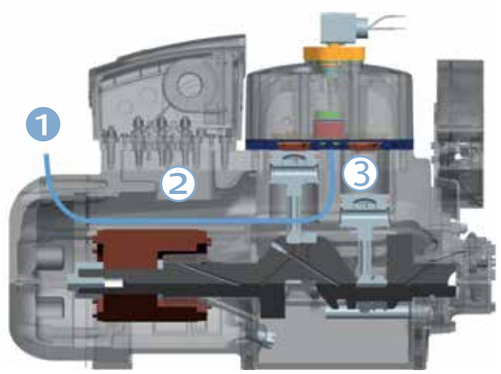

Our Digital Technology - Your Benefits

The benefits of digital modulation are the same as capacity modulation by means of a frequency inverter, in terms of energy savings, precise evaporator air temperature and suction pressure control.

Apart from these benefits digital modulation offers significiant additional advantages as described to the right.

Features & Benefits

- No specific precautions are necessary with respect to oil return as Stream Digital runs at constant speed just like a standard compressor
- No vibrations or mechanical stress on system piping and compressor parts
- Reduced compressor cycling for longer contactor and compressor life
- Simple system and control architecture whatever the compressor size
- Eliminates over/under shooting of suction pressure leading to the ability to run the system at a higher set point
- Easy to integrate in existing equipment
- Increased uptime and reduced maintenance
- Possibility to easily retrofit existing installations with digital cylinder head kit

Cycle Time

The compressor capacity is controlled by modulating the solenoid valve input over time.

Example 1 :

- Cycle time: 20 sec
- Valve active/open: 10 sec
- Valve inactive/closed: 10 sec
- Resulting capacity: 50%

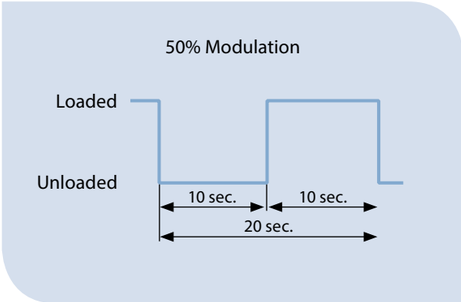

Example 2 :

- Cycle time: 20 sec
- Valve active/open: 12 sec
- Valve inactive/closed: 8 sec
- Resulting capacity: 40%

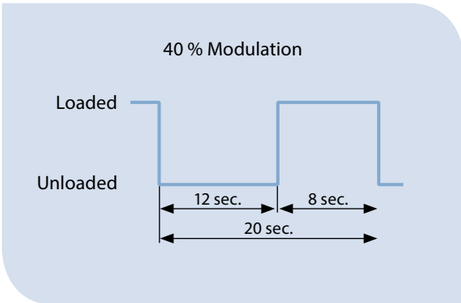

Noise Emissions - A Serious Concern

Environmental noise emissions have become a serious issue and this has led to a wide variety of contentious situations, particularly in the case of refrigeration applications. Indeed, kitchen equipment, compressor packs or condensing units are often the source of disturbing noise in urban areas.

The Quietest Compressor On The Market With Sound Shell Technology

Stream is one of the quietest reciprocating compressors on the market: design efforts have led to sound reduction of up to 7dBA compared to previous generation of compressors depending on models and application. Compressor quiet operation is not always sufficient for sound sensitive and urban application. As a result a new sound shell can be fitted on Stream compressors and provides an additional 15dBA attenuation.

Stream Sound Shell How It Works

By leveraging the success of its scroll sound shell Emerson Climate Technologies developed the Stream sound shell. Emerson engineers designed a sound shell that fully encapsulates Stream to minimize any sound leaks.

The shell is made of 5 major parts that make it easy to assemble and fit refrigeration equipment.

Noise Level

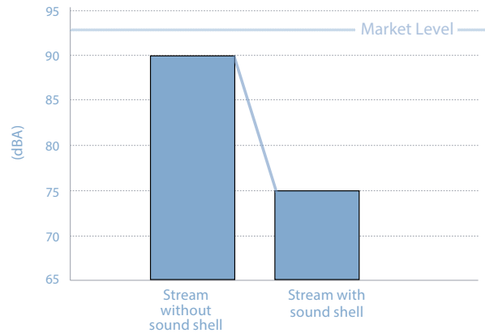

Snapped together parts allow quick access to key components of the compressor such as the oil control device if mounted, the oil service valve or the CoreSense Diagnostics reset button.

What It Means To You

Two shell versions are available: one for 4-cylinder and one for 6-cylinder compressors including digital models.

Groundbreaking design techniques and materials, derived from the automotive industry are used. Low pressure reaction injection molded parts allow up to 15 dBA sound attenuation and provide a significant improvement over conventional sound jackets that reduce compressor sound by just 3 to 6 dBA.

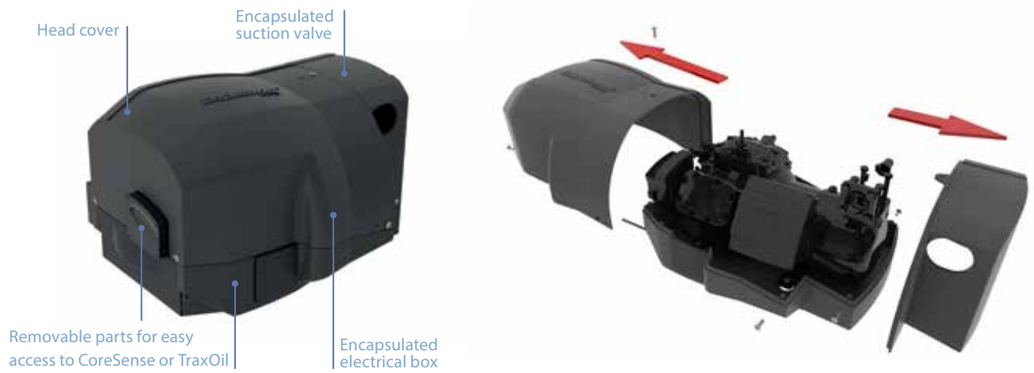

Designed For Durability And Best-In-Class Performance

The Stream line of 4 cylinder R744 compressors is the ideal solution for R744 medium temperature cascade and booster systems. It is characterised by a design pressure of 135 bar. Refrigerant flow and heat transfer have been optimized for best performance. All compressors are equipped with CoreSense™ technology and offer the possibility to diagnose system related problems faster or even before they occur.

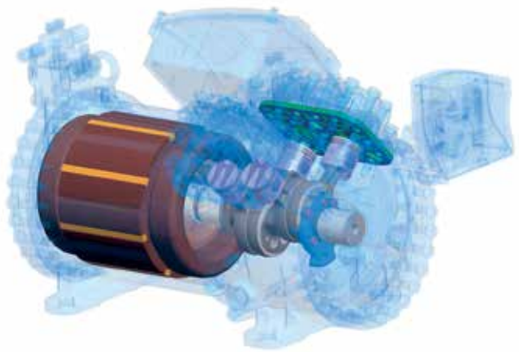

Features & Benefits

Designed for flexibility in pack design and operation

- Compact dimensions
- Integrated high and low pressure relief valve
- Discharge temperature protection
- Service valve 360° rotation for ease of piping design
- 2 sight glasses for mounting of oil management control and visual inspection
- One additional sight glass for oil visual inspection at run time
- One oil port for oil equalization in parallel system
- Oil splasher system ensuring lubrication at constant and variable speed

Designed for durability and performance in R744 applications

- Low sound, low vibration and large discharge chamber to eliminate pulsation
- High design pressures of 135 bar (high side) and 90 bar (low side)
- Burst pressures in excess of safety factor 3
- Cylinder head and discharge plenum design minimizing heat transfer to suction side
- Stepless capacity modulation via inverter
- Copeland CoreSense™ Diagnostics
- Individual compressor power consumption monitoring

Technical Specifications

Operating Envelopes With R744

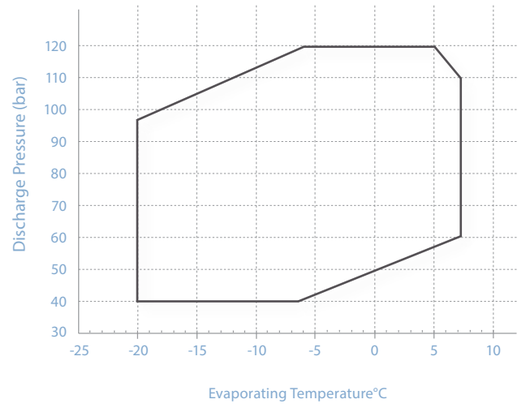

Technical Overview

Model	Nominal horsepower (hp)	Displace-ment (m^3/h)	Cooling Capacity* (kw)	COP	Pressure (high / low side)			Net Weight (kg)	Footprint (mm)
					Max. Operating (bar)	Design (bar)	Burst (bar)		
4MTL-12X	12	9.5	20	1.7	120 / 90	135 / 90	420 / 287	170	368 x 256
4MTL-15X	15	12.5	26	1.8				170	
4MTL-30X	30	17.9	38	1.8				175	

* Evaporating -10°C, gas cooler exit: 35°C / 90 bar, suction superheat 10 K, subcooling 0K

Dimensions

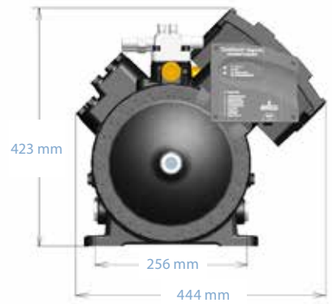

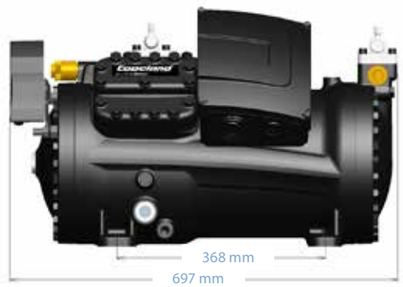

Technical Specifications

Operating Envelopes With R404A

Small Motor

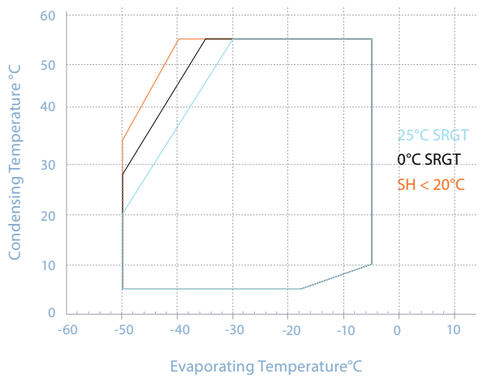

Large Motor

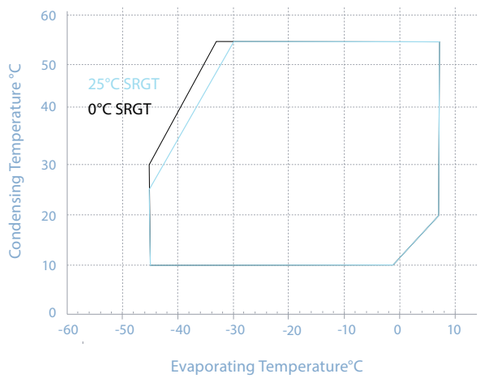

For envelopes with R134a, R407F, R407A/C, R22 refer to Selection Software.

Technical Overview

Model	Nominal Horsepower (hp)	Displacement (m3/h)	Medium Temperature						Low Temperature				Net Weight (kg)	Foot-print (mm)
			Cooling Capacity			COP			Cooling Capacity[2] (kW)		COP			
			R404A [1]	R134a [3]	R407F [1]	R404A [1]	R134a [3]	R407F [1]	R404A [1]	R407F [4]	R404A [1]	R407F [4]		
4MF-13X	13	62	31.6	18.0	31.2	2.3	2.4	2.4	10.7	8.0	1.4	1.2	177	381 x 305
4MA-22X	22	62	32.7	18.7	32.3	2.4	2.4	2.5	10.5		1.4		177	
4ML-15X	15	71	38.4	21.8	37.5	2.3	2.4	2.4	13.3	10.1	1.5	1.3	180	
4MH-25X	25	71	38.5	21.5	37.6	2.4	2.4	2.5	12.4		1.4		187	
4MM-20X	17	78	42.0	24.1	40.6	2.3	2.4	2.4	15.1	11.2	1.5	1.3	182	
4MI-30X	27	78	42.8	23.8	41.4	2.4	2.4	2.5	14.4		1.5		188	
4MT-22 X	22	88	47.6	27.4	46.1	2.3	2.4	2.4	17.0	12.9	1.5	1.3	183	
4MJ-33X	33	88	47.6	26.6	46.1	2.4	2.4	2.4	16.2		1.5		190	
4MU-25X	25	99	53.1	30.2	51.2	2.3	2.4	2.3	18.6	14.4	1.4	1.3	186	
4MK-35X	32	99	53.5	29.8	51.6	2.3	2.4	2.4	18.3		1.4		202	
6MM-30X	27	120	64.2	36.4	63.0	2.3	2.4	2.4	22.7	17.5	1.4	1.3	215	
6MI-40X	35	120	64.6	35.0	63.4	2.3	2.3	2.5	21.9		1.4		219	
6MT-35X	32	135	72.4	41.1	68.8	2.3	2.4	2.4	25.6	20.2	1.5	1.3	221	
6MJ-45X	40	135	72.4	39.7	70.1	2.3	2.4	2.4	24.3		1.5		223	
6MU-40X	40	153	81.4	44.9	77.1	2.3	2.3	2.3	28.4	22.1	1.4	1.3	225	
6MK-50X	50	153	80.9	42.5	79.1	2.3	2.2	2.4	27.3		1.4		230	

1 Evaporating -10°C, condensing 45°C, suction gas temperature 20°C, subcooling 0K
2 Evaporating -35°C, condensing 40°C, suction gas temperature 20°C, subcooling 0K
3 Evaporating -10°C, condensing 45°C, suction superheat 10K, subcooling 0K
4 Evaporating -35°C, condensing 40°C, suction superheat 20K, subcooling 0K

Technical Specifications

Operating Envelopes With R404A (100% Capacity Modulation)

Small Motor

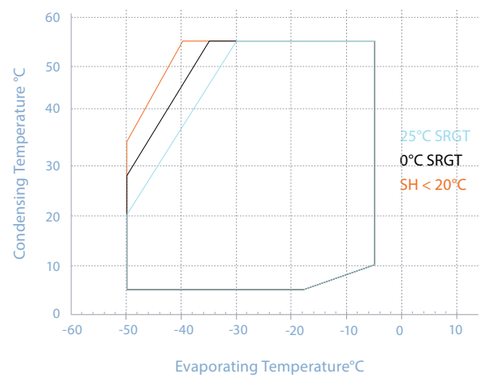

Large Motor

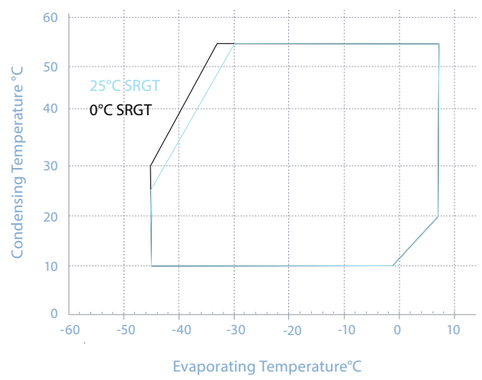

For envelopes with R134a, R407F, R407A/C, R22 refer to Selection Software.

Technical Overview (100% Capacity Modulation)

Model	Nominal Horsepower (hp)	Displacement (m3/h)	Medium Temperature						Low Temperature				Net Weight (kg)	Foot-print (mm)
			Cooling Capacity			COP			Cooling Capacity[2] (kW)		COP			
			R404A [1]	R134a [3]	R407F [1]	R404A [1]	R134a [3]	R407F [1]	R404A [1]	R407F [4]	R404A [1]	R407F [4]		
4MFD-13X	13	62	31.6	18.0	31.2	2.3	2.4	2.4	10.7	8.0	1.4	1.2	177	381 x 305
4MAD-22X	22	62	32.7	18.7	32.3	2.4	2.4	2.5	10.5		1.4		177	
4MLD-15X	15	71	38.4	21.8	37.5	2.3	2.4	2.4	13.3	10.1	1.5	1.3	180	
4MHD-25X	25	71	38.5	21.5	37.6	2.4	2.4	2.5	12.4		1.4		187	
4MMD-20X	17	78	42.0	24.1	40.6	2.3	2.4	2.4	15.1	11.2	1.5	1.3	182	
4MID-30X	27	78	42.8	23.8	41.4	2.4	2.4	2.5	14.4		1.5		188	
4MTD-22 X	22	88	47.6	27.4	46.1	2.3	2.4	2.4	17.0	12.9	1.5	1.3	183	
4MJD-33X	33	88	47.6	26.6	46.1	2.4	2.4	2.4	16.2		1.5		190	
4MUD-25X	25	99	53.1	30.2	51.2	2.3	2.4	2.3	18.6	14.4	1.4	1.3	186	
4MKD-35X	32	99	53.5	29.8	51.6	2.3	2.4	2.4	18.3		1.4		202	
6MMD-30X	27	120	64.2	36.4	63.0	2.3	2.4	2.4	22.7	17.5	1.4	1.3	215	
6MID-40X	35	120	64.6	35.0	63.4	2.3	2.3	2.5	21.9		1.4		219	
6MTD-35X	32	135	72.4	41.1	68.8	2.3	2.4	2.4	25.6	20.2	1.5	1.3	221	
6MJD-45X	40	135	72.4	39.7	70.1	2.3	2.4	2.4	24.3		1.5		223	
6MUD-40X	40	153	81.4	44.9	77.1	2.3	2.3	2.3	28.4	22.1	1.4	1.3	225	
6MKD-50X	50	153	80.9	42.5	79.1	2.3	2.2	2.4	27.3		1.4		230	

1 Evaporating -10°C, condensing 45°C, suction gas temperature 20°C, subcooling 0K
2 Evaporating -35°C, condensing 40°C, suction gas temperature 20°C, subcooling 0K
3 Evaporating -10°C, condensing 45°C, suction superheat 10K, subcooling 0K
4 Evaporating -35°C, condensing 40°C, suction superheat 20K, subcooling 0K

Stream Continuous Improvements In Detail

Technical Highlights

Stream is a brand new compressor entirely redesigned to confer outstanding benefits to the refrigeration industry:

- Improved product range versus previous Discus compressors
- Reduced overall dimensions allowing refrigeration equipment to remain compact
- Reduced compressor weight by up to 45 kg
- Wide operating envelope: one model fits all refrigeration applications, medium and low temperature
- Availability of 2 motor versions per displacement, the largest motor being the best selection for inverter applications
- No cooling fan required for low temperature (0°C suction gas return temperature) to keep applied costs low
- Extremely low condensing temperatures for increased system efficiency
- Protection and sensing devices pre-installed to reduce applied system cost
- Current sensor which enables power monitoring of individual compressors to stay on top of energy costs
- Integrated compressor status LEDs for local communication via color and flash codes
- Remote communication via Modbus® for faster service

Inside View Of Stream Compressor

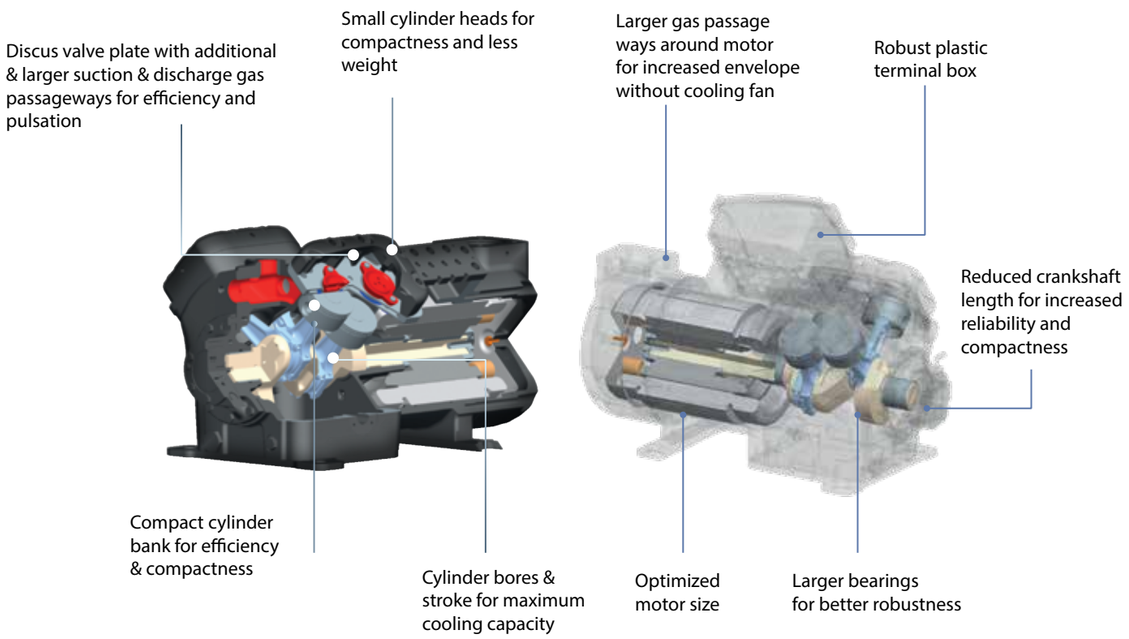

Emerson Climate Technologies at a Glance

Emerson Climate Technologies is the world's leading provider of heating, ventilation, air conditioning, and refrigeration solutions for residential, industrial and commercial applications. We combine technically superior products and services from our industry leading divisions and brands with our global engineering, design and distribution capabilities to create reliable, energy efficient climate systems that improve human comfort, safeguard food, and protect the environment.

TSH137-EN-1304

For more details see www.emersonclimate.eu

Emerson Climate Technologies - European Headquarters - Pascalstrasse 65 - 52076 Aachen, Germany
Phone: +49 (0) 2408 929 0 - Fax: +49 (0) 2408 929 570 - www.emersonclimate.eu

The Emerson Climate Technologies logo is a trademark and service mark of Emerson Electric Co. Emerson Climate Technologies Inc. is a subsidiary of Emerson Electric Co. Copeland is a registered trademark and Copeland Scroll is a trademark of Emerson Climate Technologies Inc.. All other trademarks are property of their respective owners. Emerson Climate Technologies GmbH shall not be liable for errors in the stated capacities, dimensions, etc., as well as typographic errors. Products, specifications, designs and technical data contained in this document are subject to modification by us without prior notice. Illustrations are not binding.

© 2013 Emerson Climate Technologies, Inc.

SMARTSPEED™

FAN MOTOR TECHNOLOGY

INNOVATIVE | COST EFFECTIVE | ENERGY EFFICIENT

REFRIGERATION TRENTON PRODUCTS®

Leading the Way in Quality and Value

SMARTSPEED™

FAN MOTOR TECHNOLOGY

Utilizing Trenton's patented SmartSpeed technology, customers can now benefit from reduced energy consumption and reduced system refrigerant charges, previously only available with more complex and expensive methods.

SmartSpeed offers a simplified, economical solution in order to meet the increasingly stringent efficiency levels being mandated across North America.

INNOVATIVE

The innovative feature behind the SmartSpeed technology is a two speed EC fan motor that changes speed according to system operation and ambient conditions.

On evaporators, the motor speed reduces to low speed when the compressor cycles off, saving energy without sacrificing product integrity.

On condensing units, the motor speed reduces to low speed when ambient conditions drop below 60°F, saving energy and refrigerant.

ENERGY SAVINGS

Adding SmartSpeed means system-wide savings, regardless of which option you choose. Add SmartSpeed to the condensing unit, and save up to 10% on your system energy consumption. SmartSpeed on the evaporator can mean savings up to 15%. Put SmartSpeed on both and you get the ultimate savings: **up to 25%.**

CHECK OUT OUR VIDEOS

Watch our video to learn more about the versatility and convenience of Trenton's SmartSpeed.

t-rp.com/smartspeed

SIMPLE

SmartSpeed units feature simplified wiring which does not require any additional complex controls, and is easy to operate.

PATENTED & AWARD WINNING

SmartSpeed is patented under U.S. patents 8635883, 9151525 & 9297567. SmartSpeed for Evaporators received an Honorable Mention from the 2010 AHR Expo Innovation Awards.

SMARTSPEED™ FAN MOTOR TECHNOLOGY AVAILABLE FOR EVAPORATORS

AWARD WINNING

AVAILABLE ON TLV, TTM, TLP, TPLP, TMP & TEP EVAPORATORS*

EVAPORATOR WITH SMARTSPEED POWER CONSUMPTION PER MOTOR*		
MODEL	REFRIGERATION MODE FAN FULL SPEED	OFF CYCLE FAN LOW SPEED
TLV Low Velocity	95 W	25W
TTM Two Way	52 W	15 W
TLP Low Profile	60 W	13 W
TMP Medium Profile	245 W	70 W
TEP Extended Profile	460 W	155 W

Find out more at t-rp.com/smartspeed

SMARTSPEED™

FAN MOTOR TECHNOLOGY

NOW AVAILABLE FOR CONDENSING UNITS!

CONDENSING UNIT WITH SMARTSPEED POWER CONSUMPTION PER MOTOR*		
CHASSIS SIZE SEE PRODUCT DOCUMENTATION FOR DETAILS	AMBIENTS ABOVE 55°F	AMBIENTS BELOW 55°F
	FAN FULL SPEED CRANKCASE + RECEIVER HEATERS OFF	FAN LOW SPEED CRANKCASE + RECEIVER HEATERS ON
A	102 W	19 W
B	168 W	37 W
C, D	362 W	76 W
E	630 W	152 W
F	1180 W	240 W

AVAILABLE ON HERMETIC, SCROLL OR SEMI-HERMETIC CONDENSING UNITS

MAXIMIZE YOUR SYSTEM ENERGY SAVINGS

PSC MOTOR

+

PSC MOTOR

=

INDUSTRY STANDARD

PSC MOTOR

+

SMARTSPEED™ FAN MOTOR TECHNOLOGY

=

10%

ENERGY SAVINGS*

SMARTSPEED™ FAN MOTOR TECHNOLOGY

+

PSC MOTOR

=

15%

ENERGY SAVINGS*

SMARTSPEED™ FAN MOTOR TECHNOLOGY

+

SMARTSPEED™ FAN MOTOR TECHNOLOGY

=

20%-25%

ENERGY SAVINGS*

* Actual energy savings will vary due to application, load calculation assumptions, equipment sizing and other operational variables. Contact your local rep or visit www.t-rp.com/smartspeed for further details

Trenton Refrigeration offers a complete line of commercial refrigeration products. From the smallest unit to the very largest, Trenton Refrigeration brings experience and commitment to the refrigeration industry - beginning with product design and engineering, and continuing through manufacturing, sales and after market support.

Trenton Refrigeration continues to Lead The Way, providing an award-winning line of Systems Savings Solutions, designed to reduce environmental impact, reduce energy consumption, increase system efficiency and more.

LIMITROL +

FLOATING HEAD PRESSURE CONTROL SYSTEM

Limitrol+ combines various technologies into a responsive system that floats head pressure, saving energy and reducing environmental impact

AWARD WINNING

LINK/LINK +

MULTI-COMPRESSOR REFRIGERATION SYSTEM

Provides a conveniently centralized package for compressors, electrical and controls, allowing for maximized merchandizing space.

SMARTSPEED™

FAN MOTOR TECHNOLOGY

Simple, innovative EC motor technology offers significant energy savings through an award winning patented system configuration.

AWARD WINNING

QUIETUNIT

REFRIGERATION DUTY CONDENSING UNITS

2010 AHR Expo INNOVATION AWARDS Value Impact Application Honorable Mention

The award winning Quiet Unit is designed for refrigeration duty, and ideally suited for applications where space limitations, energy efficiency or sound levels are of concern.

LOW GWP

REFRIGERANTS

We have the equipment and expertise to help you respond to needs of our ever-changing industry.

DS DISTRIBUTED

REFRIGERATION SYSTEMS

Our customizable line of commercial refrigeration equipment is ideally suited for applications that require systems to be strategically placed.

DC DEFROST CONTROL

TECHNOLOGY

Responsive evaporator controls that provide energy savings by significantly increasing system efficiency over mechanically controlled systems.

EC EC SHAFTED

MOTOR TECHNOLOGY

Improved Efficiency, Reduced Sound Levels, Speed Control, Simplicity and Reliability

REFRIGERATION TRENTON PRODUCTS ®

Leading The Way in Quality and Value

TRENTON REFRIGERATION

Brantford, ON - Longview, TX

Phone: (519) 751-0444 or 1-800-463-9517 Fax: (519) 753-1140

Available Exclusively from

UR®

1-888-578-9100

For more information about product lines go to: www.t-rp.com

Due to National Refrigeration's policy of continuous product improvement, we reserve the right to make changes without notice.

T-SS-01
1090798
28/03/18

TECHNICAL GUIDE
R-410A
ZF SERIES
6.5 - 12.5 TON
60 Hertz

ZF 6.5 THROUGH 10 TON

ZF12.5 TON

Description

ASHRAE 90.1 COMPLIANT

YORK® Predator® units are convertible single packages with a common footprint cabinet and common roof curb for all 6.5 through 12.5 ton models. All units have two compressors with independent refrigeration circuits to provide 2 stages of cooling. The units were designed for light commercial applications and can be easily installed on a roof curb, slab, or frame.

All Predator® units are self-contained and assembled on rigid full perimeter base rails allowing for 3-way forklift access and overhead rigging. Every unit is completely charged, wired, piped, and tested at the factory to provide a quick and easy field installation.

Predator® units in all tonnage sizes are convertible between side airflow and down airflow, with corresponding economizer if economizer option is desired.

Predator® units are available in the following configurations: cooling only, cooling with electric heat, and cooling with gas heat. Electric heaters are available as factory-installed options or field-installed accessories.

All units provide constant supply air volume. A variable air volume (VAV) option, which features a variable frequency drive (VFD), is available on 6.5 through 12.5 ton models.

Tested in accordance with:

Table of Contents

Description 1
Table of Contents 2
Component Location 2
Nomenclature 3
Prior Nomenclature 4
Features and Benefits 5
Guide Specifications 11
Physical Data 15
Capacity Performance 18
Airflow Performance 28
Sound Performance 36
Electrical Data 37
Typical Wiring Diagrams 45
Weights and Dimensions 61
Economizer Options 69

Component Location

Cooling With Gas Heat

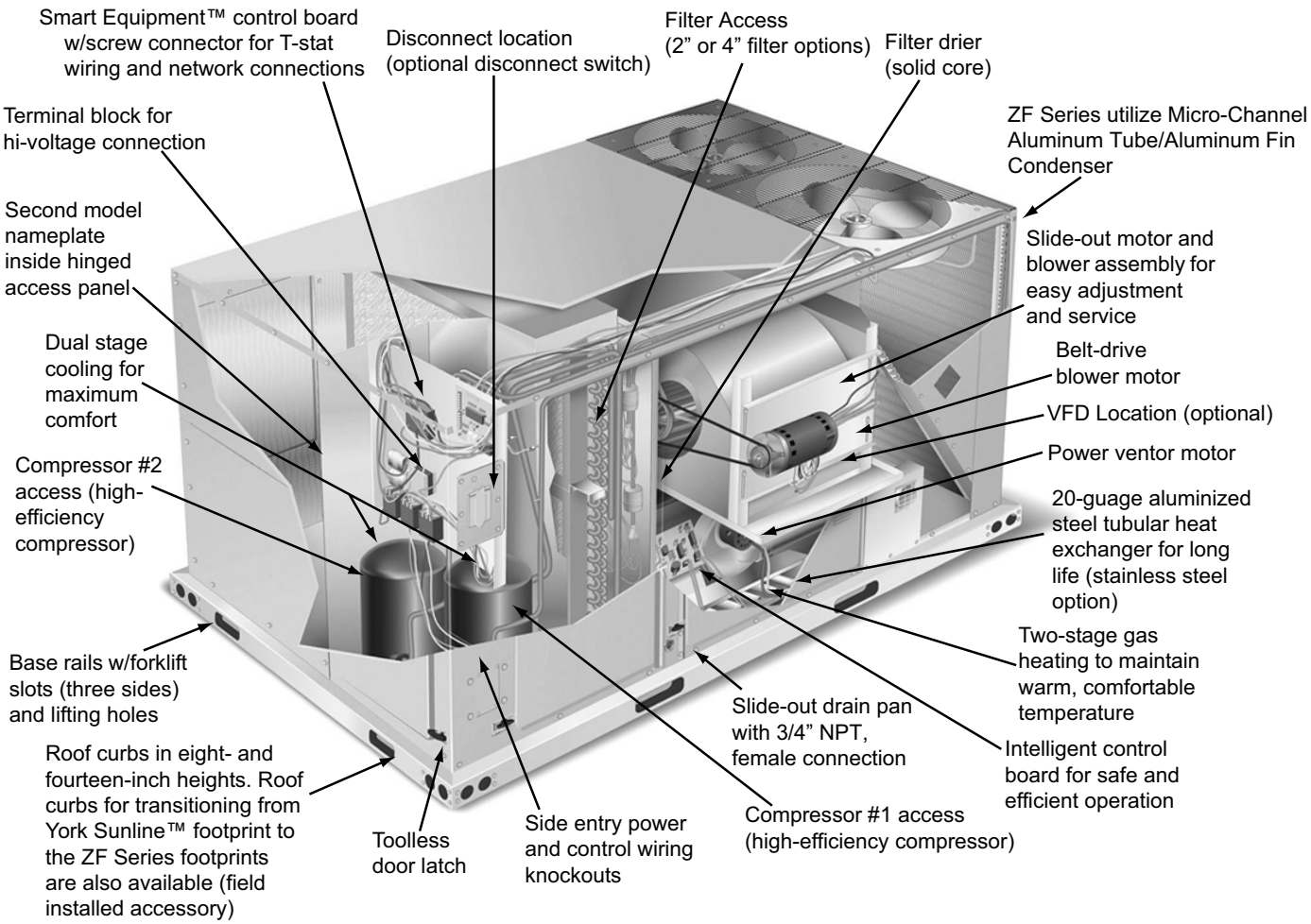

Nomenclature

6.5-12.5 Ton York® Model Number Nomenclature

Z	F	090	C	00	A	2	A	1	A	A	A	1	A	2

Product Category

Z = A/C, Single Pkg., R-410A

Product Identifier

F = Pkg AC Std Eff

Nominal Cooling Capacity

078 = 6.5 Ton
090 = 7.5 Ton
102 = 8.5 Ton
120 = 10.0 Ton
150 = 12.5 Ton

Heat Type

C = Cooling Only
E = Electric Heat

Two Stage Natural Gas Heat Options

N = 2 Stage Gas Aluminized Steel
S = 2 Stage Gas Stainless Steel

Heat Capacity

00 = Cooling Only

Gas MBH Input (Unit Size Allowed)

12 = 120 MBH Input (078, 090, 102)
18 = 180 MBH Input (078,090,102,120,150)
24 = 240 MBH Input (120,150)

Electric Heat (Unit Size Allowed)

09 = 9 KW (078,090,102)
18 = 18 KW (078,090,102,120,150)
24 = 24 KW (078,090,102,120,150)
36 = 36 KW (078,090,102,120,150)
54 = 54 KW (120,150)

Blower Option

B = Standard Static
D = High Static
E = VFD/VAV Std Static
G = VFD/VAV High Static
H = VFD/VAV w/Bypass Std Static
K = VFD/VAV w/Bypass High Static
L = VFD/VAV Customer Std Static
N = VFD/VAV Customer High Static
P = VFD IntelliSpeed Std Static
R = VFD IntelliSpeed High Static
S = VFD w/Byp IntelliSp Std Static
U = VFD w/Byp IntelliSp Hi Static
V = VFD Cust IntelliSp Std Static
X = VFD Cust IntelliSp Hi Static

Voltage

2 = 208/230-3-60
4 = 460-3-60
5 = 575-3-60

Outdoor Air Option

A = No Economizer
B = Economizer w/Barometric RLF
D = Economizer w/Power EXH
H = Motorized Damper

Service Options

1 = No Service Options
2 = DSC (Disconnect Switch)
3 = NCO (Non-PWR Conv. Outlet)
4 = PCO (Powered Conv. Outlet)
5 = DSC,NCO
6 = DSC,PCO

Sensors

A = No Sensors
B = PHM (Phase Monitor)
C = DFS (Dirty Filter Switch)
D = SSD (Supply Air Smoke DET)
E = RSD (Return Air Smoke DET)
F = PHM,DFS
G = PHM,SSD
H = PHM,RSD
J = DFS,SSD
K = DFS,RSD
L = SSD,RSD
M = PHM,DFS,SSD
N = PHM,DFS,RSD
P = PHM,SSD,RSD
Q = DFS,SSD,RSD
R = PHM,DFS,SSD,RSD

Controls Option

A = Stand Alone Smart Equipment™
C = BACnet MSTP,Mdbs,N2 COM Card
D = CPC Control, DFS, APS
F = Fault Detection Diagnostics
G = Novar UCM Ctrl, DFS, APS
H = Hnywll Excel 10 CTRL,DFS,APS
M = Verasys Single Zone
N = Verasys Change Over Bypass
P = Verasys VAV
Q = Verasys Single Zone W/FDD
R = Verasys COBP W/FDD
T = Verasys VAV W/FDD

Refrigeration

A = Standard Refrigeration
B = ECC (E-Coat Cond Coil)
C = EEC (E-Coat Evap Coil)
D = HGBP (Hot Gas Bypass)
F = ECC,EEC
G = ECC,EEC,HGBP
J = ECC,HGBP
M = EEC,HGBP

Additional Options

1 = STD Throwaway Filter
2 = 2" Pleated Filters (Merv 8)
3 = 4" Pleated Filters (Merv 13)
4 = Coil Guard (CG), STD Filter
5 = 2" Pleated Filter,CG
6 = 4" Pleated Filter,CG

Cabinet Options

A = Std Cabinet
E = SSD (SST Drain Pan)
R = Reverse Drain Pan

Product Generation

1 = First Generation
2 = Second Generation

Prior Nomenclature

6.5-12.5 Ton York® Model Number Nomenclature For Units Produced Before 2-01-2016

Z	F	090	N10	A	2	A	AA	7	0	1	2	4	A

Product Category

Z = A/C, Single Pkg., R-410A

Product Identifier

F = 11.2 + EER A/C

Nominal Cooling Capacity

078 = 6.5 Ton
090 = 7.5 Ton
102 = 8.5 Ton
120 = 10.0 Ton
150 = 12.5 Ton

Heat Type and Nominal Heat Capacity

C00 = Cooling Only. No heat installed

Gas Heat Options

N10 = 100 MBH Output Aluminized Steel
N15 = 150 MBH Output Aluminized Steel
N20 = 200 MBH Output Aluminized Steel
S10 = 100 MBH Output Stainless Steel
S15 = 150 MBH Output Stainless Steel
S20 = 200 MBH Output Stainless Steel

Electric Heat Options

E09 = 9 KW
E18 = 18 KW
E24 = 24 KW
E36 = 36 KW
E54 = 54 KW

Airflow

A = Std. Motor
D = Std. Motor/Motorized Damper (Downflow Only)
H = Std Motor/Low Leak Econ/Barometric Relief (Downflow & Horizontal End Return Only)
J = Std Motor/Low Leak Econ/Power Exhaust (Downflow & Horizontal End Return Only)
N = Hi Static
R = Hi Static/Motorized Damper (Downflow Only)
V = Hi Static Mtr/Low Leak Econ/Barometric Relief (Downflow & Horizontal End Return Only)
W = Hi Static Mtr/Low Leak Econ/Power Exhaust (Downflow & Horizontal End Return Only)

Voltage

2 = 208/230-3-60
4 = 460-3-60
5 = 575-3-60

Installation Options

A = No Options Installed
B = Option 1
C = Option 2
D = Options 1 & 2
E = Option 3
F = Option 4
G = Options 1 & 3
H = Options 1 & 4
J = Options 1, 2 & 3
K = Options 1, 2, & 4
L = Options 1,3 & 4
M = Options 1, 2, 3, & 4
N = Options 2 & 3
P = Options 2 & 4
Q = Options 2, 3, & 4
R = Options 3 & 4
S = Option 5
T = Options 1 & 5
U = Options 1, 3, & 5
V = Options 1, 4, & 5
W = Options 1, 3, 4, & 5
X = Options 3 & 5
Y = Options 4 & 5
Z = Options 3, 4 & 5

Options

1 = Disconnect
2 = Non-Pwr'd Conv. Outlet
3 = Smoke Detector S.A.
4 = Smoke Detector R.A.
5 = Pwr'd Conv. Outlet

Product Generation

7 = Seventh Generation

Additional Options

AA = None
AB = Phase Monitor
AC = Coil Guard
AD = Dirty Filter Switch
AE = Phase Monitor & Coil Guard
AF = Phase Monitor & Dirty Filter Switch
AG = Coil Guard & Dirty Filter Switch
AH = Phase Monitor, Coil Guard & Dirty Filter Switch
RC = Coil Guard, Shipping Bag & American Flag
TA = Technicoat Condenser Coil
TJ = Technicoat Evaporator Coil
TS = Technicoat Evaporator & Condenser Coils
EA = E-Coat Condenser Coil
EJ = E-Coat Evaporator Coil
ES = E-Coat Cond & Evap Coils

ZZ = If desired option combination is not listed above, ZZ will be assigned and configuration options will be located in digits 15-18.

Product Style

A = Style A
B = Style B
C = Style C

Configuration Options (not required for all units)
These four digits will not be assigned until a quote is requested, or an order placed.

- SS Drain Pan
- CPC Controller, DFS, APS
- Honeywell Controller, DFS, APS
- Novar Controller, DFS, APS
- Simplicity®Smart Equipment w/Comm Card (BACnet, N2, Mod-Bus)
- Fault Detection and Diagnostics (FDD)
- York Commercial Comfort System (YCCS) Rtu Controller
- Hot Gas Bypass (Standard on VAV, Optional on CV)
- IntelliSpeed with VFD
- IntelliSpeed, VFD and Manual Bypass
- IntelliSpeed, VFD Ready (for customer-provided, field-installed drive)
- Variable Air Volume, VFD (not available with factory installed BAS options)
- Variable Air Volume, VFD and Manual Bypass (not available with factory installed BAS options)
- Variable Air Volume, VFD Ready (for customer-provided, field-installed drive)
- 2" Pleated Filters, MERV 7
- 4" Pleated Filters, MERV 13
- BAS Ready Economizer (2-10 V.D.C. Actuator without a Controller)
- Shipping Bag
- Any Combination of Additional Options that Don't Have an Option Code Pre-assigned

Features and Benefits

Standard Features

- **Service Friendly** - The Predator® incorporates a number of key features for ease of serviceability.

  Service time is reduced through the use of hinged, toolless panels. Such panels provide access to frequently inspected components and areas, including the control box, compressors, filters, indoor motor & blower, and the heating section. The panels are screwed in place at the factory to prevent access by children or other unauthorized persons. It is recommended that the panels be secured with screws once service is complete.

  Service windows have been placed in both condenser section walls. Rotation of the cover allows easy access to the condenser coils for cleaning or inspection.

  The Smart Equipment™ control board provides alarm messages to help quickly identify any faults.

  All units use the same standard filter size. This standardization removes any confusion on which filter sizes are needed for replacement.

  The non-corrosive drain pan slides out of the unit to permit easy cleaning. The drain pan is accessed by removing the drain pan cover plate on the rear of the unit. Once the plate is removed, the drain pan slides out through the rear of the unit.

  All Predator® units have a second model nameplate located inside the control access door. This is to prevent deterioration of the nameplate through weathering.
- **Coil Technology** – ZF condensers utilize Micro-Channel "all aluminum" condensers which provide improved heat transfer capabilities and reduced charge volumes.
- **Environmentally Aware** - For improved Indoor Air Quality, a combination of aluminum foil faced and elastometric rubber insulations are used exclusively throughout the units.
- **Balanced Heating** – The Predator® offers "Ultimate Heating Comfort" with a balance between 1st and 2nd stage gas heating. The first stage of a gas heat Predator® unit provides 60% of the heating capacity. Balanced heating allows the unit to better maintain desired temperatures.
- **Convertible Airflow Design** – The side duct openings are covered when they leave the factory. If a side supply/ return is desired, the installer simply removes the two side duct covers from the outside of the unit and installs them over the down shot openings. No panel cutting is required. Convertible airflow design allows maximum field flexibility and minimum inventory.
- **System Protection** - Suction line freezestats are supplied on all units to protect against loss of charge and coil frosting when the economizer operates at low outdoor air temperatures while the compressors are running. Every unit has solid-core liquid line filter-driers and high and low-pressure switches. Internal compressor protection is standard on all compressors. Phase Monitors are standard on units with scroll compressors. This accessory monitors the incoming power to the unit and protects the unit from phase loss and reversed phase rotation.
- **Advanced Controls** - Smart Equipment™ control boards have standardized a number of features previously available only as options or by utilizing additional controls.

⚠ CAUTION

The Smart Equipment™ control board used in this product will effectively operate the cooling system down to 0°F when this product is applied in a comfort cooling application for people. An economizer is typically included in this type of application. When applying this product for process cooling applications (computer rooms, switchgear, etc.), please reference applications bulletin AE-011-07 or call the applications department for Unitary Products @ 1-877-UPG-SERV for guidance. Additional accessories may be needed for stable operation at temperatures below 30°F.

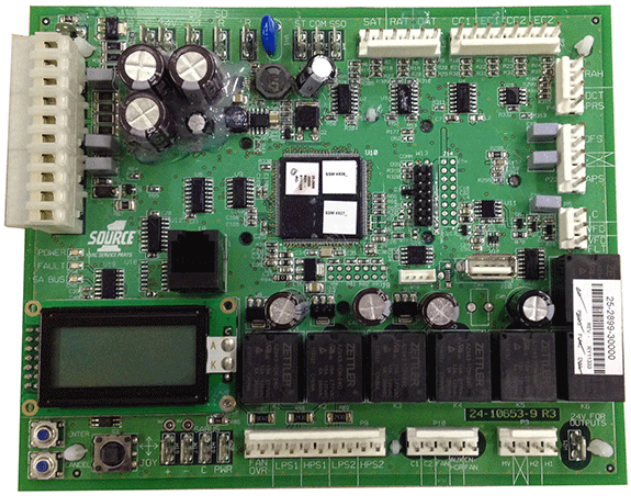

- **Units will come with the new state of the art Smart Equipment™ control system.** The new unit control incorporates the best of the already proven Simplicity™ unitary controls and creates a more robust, intelligent control. The goal of this control is to utilize cutting edge technology making the equipment easier to install, operate, and service. All units are Factory commissioned, configured, and run tested.
- **Versatile -** The Smart Equipment™ control can be configured to use with a standard thermostat (easy to connect screw terminals), A zone sensor, or can be setup to communicate with multiple BAS communication protocols to integrate with building automation systems.
- **Reduce field installed complexity -** Each unit will comes equipped with factory installed supply air, return air, and outdoor air temperature sensors providing key temperature readings thus reduce field installed complexity.
- **On-board USB Port -** The new control comes with a long list of features including data logging, current and previous system faults and software update capabilities

using the on board USB port and common flash drive. Energy use monitoring capabilities allow custom tailoring to allow a system to work more efficiently at all times and occupancy levels. Self test and start-up reports also available from the board VIA the USB port.

- **Embedded LCD Display -** The board has a easy to read, built-in LCD display and easy to use navigation joystick and buttons allowing the user to quickly navigate the menus displaying unit status, options, current function, supply, return and outdoor temperatures, fault codes and other information.
- **Safety Monitoring -** The control monitors the outdoor, supply, and return air temperatures and the high and low pressure switch status on the independent refrigerant circuits. On units with heating the gas valve and high temperature limit switches are monitored on gas and electric heating units. The control also monitors the voltage supplied to the unit and will protect the unit if low voltage due to a brown out, or other electrical issue occurs.
- **Low Ambient -** An integrated low-ambient control allows units to operate in the cooling mode down to 0°F outdoor ambient without additional components or intervention. Optionally, the control board can be programmed to lockout the compressors when the outdoor air temperature is low or when free cooling is available.
- **Anti-Short Cycle Protection -** To aid compressor life, an anti- short cycle delay is incorporated into the standard control. Compressor reliability is further ensured by programmable minimum run times. For testing, the anti-short cycle delay can be temporarily overridden with the push of a button.
- **Fan Delays -** Fan on and fan off delays are fully programmable. Furthermore, the heating and cooling fan delay times are independent of one another. All units are programmed with default values based upon their configuration of cooling and/or heating capacity.
- **Nuisance Trip Protection and Three Strikes -** To prevent nuisance calls, the control board uses a three times, you're out philosophy. The high, low-pressure switch, anti-freeze protection, low voltage or heating high limit must trip three times within two hours before the unit control board will lock out the associated compressor.An alarm message will be displayed on the LCD screen.
- **Lead-Lag** - An integrated Lead-Lag option allows equal run time hours on all compressors, thereby extending the life of all compressors. This option is selectable on the unit control board.
- **Low Limit Control (LLC)** - To prevent the supply air from dropping below a specified set point, when there is a demand for cooling during cold outside conditions. (Programmable Set point)
- **Reliable** - From the beginning - All units undergo computer automated testing before they leave the factory. Units are tested for refrigerant charge and pressure, unit amperage, and 100% functionality. For the long term - All units are painted with a long lasting, powder paint that stands up over the life of the unit. The paint used has been proven by a 1000 hour salt spray test.
- **Full Perimeter Base Rails** - The permanently attached base rails provide a solid foundation for the entire unit and protect the unit during shipment. The rails offer rigging holes so that an overhead crane can be used to place the units on a roof.
- **Easy Installation** - Gas and electric utility knockouts are supplied in the unit underside as well as the side of the unit. Utility connections can be made quickly and with a minimum amount of field labor. All units are shipped with 2" throw-away filters installed.
- **Wide Range of Indoor Airflows** - All supply air blowers are equipped with a belt drive that can be adjusted to meet the exact requirements of the job. A high static drive option is available for applications with a higher CFM and/ or static pressure requirement.
- **Warranty** - All models include a 1-year limited warranty on the complete unit. Compressors and electric heater elements each carry a 5-year warranty. Aluminized steel (10 yr.) and stainless steel tubular heat exchangers carry a 15- year warranty.

Factory Installed Options

YORK® offers several equipment options factory installed, for the Predator® line.

- **Optional Factory Installed Economizers** - Predator units offer a variety of optional factory installed economizers with low leak dampers. The outdoor air dry bulb sensor enables economizer operation if the outdoor air temperature is less than the set point of the economizer logic module. See economizer options section to determine the correct economizer for your application.
- **Down flow / End Return Economizers (with barometric relief and fresh air hood)** - All units offer a variety of optional factory installed down flow economizers that are shipped, installed and wired with low leak dampers designed to meet ASHRAE 90.1-2010, AMCA 511 Class 1A damper, and the International Energy Conservation Code (IECC) certification requirements by achieving leakage rates of 3 cfm/sq. ft. at 1" of static pressure. Each economizer goes through a rigorous 60,000 cycle test. Dry bulb, single enthalpy, and dual enthalpy (with field installed kit) can be selected. The economizer has spring return, fully modulating damper actuators and is capable of introducing up to 100% outdoor air. As the outdoor air intake dampers open, the return air dampers close. The changeover from mechanical refrigeration to economizer operation is regulated by the outdoor air dry bulb temperature or the outdoor air enthalpy input. The optional (field installed) single or dual enthalpy kits provide additional inputs to monitor outdoor air/ or return air humidity and temperature for true enthalpy control. The installer needs only to assemble the outdoor air hood, attach the enthalpy control the hood and mount the hood to the unit (Hood and control are provided).
- **Power Exhaust** - This factory option allows down flow or horizontal end return economizer operation. **The power exhaust must be removed from the unit and mounted in the horizontal end return duct work when applying**

the product in the horizontal, end return configuration.

- **Motorized Outdoor Air Damper** - The motorized outdoor air damper includes a slide-in/plug-in damper assembly with an outdoor air hood and filters. The outdoor air dampers open to the preset position when the indoor fan motor is energized. The damper has a range of 0% to 100% outdoor air entry.
- **Alternate Indoor Blower Motor** - For applications with high static restrictions, units are offered with optional indoor motors that provide higher static output and/or higher airflow, depending upon the installer's needs.
- **Variable Air Volume (VAV; 6.5 through 12.5 ton, only** - A factory-installed variable frequency drive (VFD), mounted in the Blower Access compartment, is used to control the speed of the indoor blower motor in order to maintain a constant static pressure in the supply duct. A duct pressure transducer is provided with the unit. The drive comes completely wired and pre-programmed from the factory.

  An optional, factory-installed manual bypass switch available with factory-installed VFD can be found in the Blower Motor Access compartment. The switch can be used to either route power to the VFD for modulating control of the blower motor, to bypass the drive and operate the motor at full speed, or to power the drive (and not the motor) for diagnostic purposes.

  VAV is not available with the factory-installed 3rd. party BAS controllers. VAV is only factory installed with the Smart Equipment™ Controller.

  A 'VFD-ready' option provides the provisions for a customer-installed drive. The unit comes with a mounting bracket installed in the Blower Access compartment which may accommodate other vendor's drives depending on their size. In order to utilize the unit's mounting bracket, the maximum recommended drive dimensions are limited to approximately 9" H x 5" W x 7.5" D.

  If the drive will not fit in the allotted space, then it will have to be mounted elsewhere; either within the building on a perpendicular wall which is not subjected to excessive temperature, vibration, humidity, dust, corrosive gas, explosive gas, etc., or within an appropriate enclosure rated for outside installation to safeguard against moisture, dust and excessive heat. A terminal block located in the control box is provided for field connection of the VFD controls.
- ***IntelliSpeed*™ Supply Fan Control Option (ASHRAE 90.1 compliant, section 6.4.3.10) -** Units configured with the ***IntelliSpeed***™ Supply Fan Option will contain a VFD for multi-speed supply fan operation. This option allows the supply fan RPM to vary based on the number of compressors or heating stages energized. The economizer's minimum position will also be configurable to vary based on the supply fan VFD frequency output.
- **Aluminized Steel Gas Heat Exchanger** - For applications in non-corrosive environments.
- **Stainless Steel Gas Heat Exchanger** - For applications in corrosive environments, this option provides a full stainless steel heat exchanger assembly.
- **Stainless Steel Drain Pan -** An optional rust-proof stainless steel drain pan is available to provide years of trouble-free operation in corrosive environments.
- **Electric Heaters** - The electric heaters range from 9kW to 54kW and are available in all the voltage options of the base units. All heaters are dual staged. All heaters are intended for single point power supply.
- **Disconnect Switch** - For gas heat units and cooling units with electric heat, a HACR breaker sized to the unit is provided. For cooling only units, a switch sized to the largest electric heat available for the particular unit is provided. Factory installed option only.
- **Convenience Outlet - (Non-Powered/Powered)** - This option locates a 120V single-phase GFCI outlet with cover, on the corner of the unit housing adjacent to the compressors. The "Non-powered" option requires the installer to provide the 120V single-phase power source and wiring. The "Powered" option is powered by a stepdown transformer in the unit. Factory installed option only.
- **Smoke Detectors** - The smoke detectors stop operation of the unit and provide a fault message to the control board. Smoke detectors are available for both the supply and/or return air configurations.
- **Filters** – 2" Pleated MERV 8 or 4" Pleated MERV 13 are available to meet LEED requirements. A 2" Throwaway is shipped as standard.

⚠WARNING

Factory-installed smoke detectors may be subjected to extreme temperatures during "off" times due to outside air infiltration. These smoke detectors have an operational range of -4 °F to 158°F. Smoke detectors installed in areas that could be outside this range will have to be relocated to prevent false alarms.

- **Phase Monitors** - Designed to prevent unit damage. The phase monitor will shut the unit down in an out-of phase condition. **(Standard on units with Scroll Compressors.)**
- **Coil Guard** - Customers can purchase a coil guard kit to protect the condenser coil from damage. Additionally, this kit stops animals and foreign objects from entering the space between the inner condenser coil and the main cabinet. This is not a hail guard kit.
- **Dirty Filter Switch** - This kit includes a differential pressure switch that energizes the fault light on the unit thermostat, indicating that there is an abnormally high pressure drop across the filters. Factory installed option or field installed accessory.
- **E-Coat Condenser Coils** - The condenser coils are coated with an epoxy polymer coating to protect against corrosion.
- **E-Coat Evaporator Coils** - The evaporator coils are coated with an epoxy polymer coating to protect against corrosion.

- **Hot Gas Bypass -** Allows operation during low load conditions while avoiding coil frosting and damage to compressor. When suction pressure falls below valve setpoint, the valve modulates hot gas to the inlet of the evaporator.

  HGBP is standard on all units with VAV, and optional with constant-volume units.

Control Options

- **Smart Equipment™ with Communication Option Control** - The York® Smart Equipment™ with Communication Option Control is factory installed. It includes all the features of the Smart Equipment™ control with an additional gateway to BACnet MS/TP (programmable to Modbus or N2 protocols).
- **FDD (Fault Detection and Diagnostics) - Refrigerant side** A factory installed control system option on the commercial equipment that constantly monitors refrigerant circuit pressures, refrigerant circuit temperatures, as well as the environmental temperatures and humidity via multiple sensor inputs.
  - Provides a building owner, technician or contractor with the operational characteristics of the RTUs entire refrigerant circuit to ensure the unit is functioning at its specified performance level.
  - Provides alarms if the unit is not functioning optimally.
  - Remotely accessible via the Mobile Access Portal (MAP) gateway as well as scrolled on the UCB LCD screen.
- **Novar® BAS Control -** The Novar® building automation system controller is factory installed. Includes supply air sensor, return air sensor, dirty filter indicator switch, and air proving switch.
- **CPC BAS Control -** The Computer Process Controls Model 810-3060 ARTC Advanced Rooftop building automation system controller is factory installed. Includes supply air sensor, return air sensor, with optional dirty filter indicator switch and air proving switch.
- **Honeywell BAS Control -** The Honeywell W7750C building automation system controller is factory installed. Includes air supply sensor, return air sensor, with optional dirty filter indicator switch, and air proving switch.
- **Verasys** - Verasys provides a simple user experience with configurable self-recognizing controllers without the need for any additional tools. Verasys creates enhanced integration of HVACR equipment, zoning, and controls. Contractors are able to offer a complete bundled solution of equipment and controls to serve the light commercial market.

Field Installed Accessories

YORK® offers several equipment accessories for field installation, for the Predator® line.

- **Down flow and End Return Economizers (with fresh air hood and barometric relief) -** All units offer a variety of optional factory installed down flow economizers that are shipped, installed and wired with low leak dampers designed to meet ASHRAE 90.1-2010, AMCA 511 Class 1A damper, and the International Energy Conservation Code (IECC) certification requirements by achieving leakage rates of 3 cfm/sq. ft. at 1" of static pressure. Each economizer goes through a rigorous 60,000 cycle test. Dry bulb, single enthalpy, and dual enthalpy (with field installed kit) can be selected. The economizer has spring return, fully modulating damper actuators and is capable of introducing up to 100% outdoor air. As the outdoor air intake dampers open, the return air dampers close. The changeover from mechanical refrigeration to economizer operation is regulated by the outdoor air dry bulb temperature or the outdoor air enthalpy input. The dual enthalpy kit provides a second input used to monitor the return air (field installed). The installer needs only to assemble the outdoor air hood, attach the enthalpy control the hood and mount the hood to the unit (Hood and control are provided).
- **Single or Dual Enthalpy Control, Accessories** - These kits contain the required components to convert a dry bulb economizer to a single enthalpy and/or dual enthalpy economizer.
- **Barometric Relief Damper** - Zero to 100% capacity barometric relief dampers for use with horizontal flow, or field installed economizers.
- **Power Exhaust** - This accessory installs in the unit with a down flow or horizontal end return economizer. Power exhaust plugs into the connector in the unit bulkhead. **User must purchase the 1EH0408 barometric relief and hood kit when applying the product in a horizontal flow application. The power exhaust must be mounted in the horizontal end return ductwork.**
- **Manual Outdoor Air Damper** - Like the motorized outdoor air damper, each manual outdoor air damper includes a slide-in damper assembly with an outdoor air hood and filters. Customers have a choice of dampers with ranges of 0% to 100% or 0% to 35% outdoor air entry.
- **Motorized Outdoor Air Damper** - The motorized outdoor air damper includes a slide-in/plug-in damper assembly with an outdoor air hood and filters. The outdoor air dampers open to the preset position when the indoor fan motor is energized. The damper has a range of 0% to 100% outdoor air entry. Factory installed option or field installed accessory.
- **Smoke Detectors** - The smoke detectors stop operation of the unit by interrupting power to the control board if smoke is detected within the air compartment.
- **CO_2 Sensor** - Senses CO_2 levels and automatically overrides the economizer when levels rise above the preset limits.
- **Dirty Filter Switch** - This kit includes a differential pressure switch that energizes the fault light on the unit thermostat, indicating that there is an abnormally high pressure drop across the filters.
- **Coil Guard -** Field installed decorative wire coil guard.
- **Hail Guard** - This kit includes a sloped hood which installs over the outside condenser coil and prevents damage to the coil fins from hail strikes. Field installed accessory only.
- **Flue Exhaust Extension Kit** - In locations with wind or weather conditions which may interfere with proper exhausting of furnace combustion products, this kit can be

installed to prevent the flue exhaust from entering nearby fresh air intakes.

- **Gas Heat High Altitude Kit** - This kit converts a gas heat unit to operate at high altitudes, 2,000 to 6,000 feet. Conversion kits are available for natural gas and propane.
- **Gas Heat Propane Conversion Kit** - This kit converts a gas-fired heater from natural gas to propane. It contains the main burner orifices and gas valve replacement springs.
- **Gas Piping Kit** - Contains pipe nipples, fittings and gas cock required for gas supply connection with external shut off.
- **Electric Heaters** - The electric heaters range from 9 kW to 54kW and are available in all the voltage options of the base units. The 54kW/208-240 volt, Field-installed heater kit is not available with VAV units due to a lack of space to accommodate the heater's fuse block accessory.

  Cooling units include an adapter panel for easy installation of the electric heaters. Necessary hardware and connectors are included with the heaters. All heaters are intended for single point power supply.
- **Metal Frame Filter Kit -** Metal frame with polyester filter medium.
- **Permanent Filters** - Permanent filters are available.
- **Roof Curbs** - The roof curbs have insulated decks and are shipped disassembled The roof curbs are available in 8" and 14" heights. For applications with security concerns, burglar bars are available for the duct openings of the roof curbs.
- **Roof Curb Transition -** Single Piece Adapter (10" High) - Roof curbs for transitioning from Sunline™ units to Predator® units. Fits 7.5 to 12.5 Sunline™ roof curbs only.
- **Burglar Bars** - Mount in the supply and return openings to prevent entry into the duct work.
- **Thermostat** - The units are designed to operate with 24-volt electronic and electro-mechanical thermostats. All units (with or without an economizer) operate with two-stage heat/two-stage cool or two-stage cooling only thermostats, depending upon unit configuration.

Accessories

Field Installed Accessories - Non-Electrical

MODEL	VOLTAGE	DESCRIPTION	WHERE USED
1BD0408	All	Burglar Bars, Downflow	All Cabinets
1CG0419	All	Coil Guard	(Electric / Electric Models), 50” Tall Standard Cabinets
1CG0420	All	Coil Guard	(Gas / Electric Models), 50" Tall Standard Cabinets
1CG0427	All	Coil Guard	(Electric / Electric Models), 42” Tall Cabinets
1CG0428	All	Coil Guard	(Gas / Electric Models), 42" Tall Cabinets
1HG0411	All	Hail Guard Kit	All Tall (50") Standard Cabinets, (Excludes 12.5T "V" cabinets)
1HG0415	All	Hail Guard Kit	All Short (42") Standard Cabinets
1FE0411	All	Flue Exhaust Extension Kit	All Cabinets
1FF0414	All	2" only Metal Filter Frame Kit	All Tall 50" Cabinets
1FF0415	All	2" only Metal Filter Frame Kit	All Tall 42" Cabinets
1FL0402	All	Permanent 2" only Filter Kit Includes (4) Four Filters)	All Tall 50" Cabinets
1FL0423	All	Permanent 2" only Filter Kit (Includes (4) four Filters)	All Tall 42" Cabinets
1GP0405	All	Gas Piping Kit	All Cabinets
1HA0442	All	High Altitude Kit for Natural Gas	All 6 - 12T Cabinets
1HA0443	All	High Altitude Kit for Propane	All 6 - 12T Cabinets
1NP0442	All	Propane Conversion Kit	All 6 - 12T Cabinets
1RC0470	All	Roof Curb, 8" Height	All Cabinets
1RC0471	All	Roof Curb, 14" Height	All Cabinets
1RC0472	All	Roof Curb, Transition (7.5 T thru 12.5T Sunline to Predator 3- 12T)	All Cabinets
1WC0412	All	Wooden Crate for extra protection during shipping and handling	Standard Cabinets Only (not applicable to units 119" in length)

Field Installed Accessories - Electric Heat

MODEL	VOLTAGE	DESCRIPTION	WHERE USED
2TP04520925	230	9kW Electric Heat	All 50" Cabinet 6.5 and 8.5 Ton Models
2TP04520946	460		
2TP04520958	575		
2TP04531825	230	18kW Electric Heat	All 50" Cabinet 6.5, 8.5, 10 and 12.5 Ton Models
2TP04531846	460		
2TP04521858	575		
2TP04532425	230	24kW Electric Heat	All 50" Cabinet 6.5, 8.5, 10 and 12.5 Ton Models
2TP04532446	460		
2TP04522458	575		
2TP04533625	230	36kW Electric Heat	All 50" Cabinet 6.5, 8.5, 10 and 12.5 Ton Models
2TP04533646	460		
2TP04523658	575		
2TP04525425	230	54kW Electric Heat	All 50" 10 and 12.5 Ton Models
2TP04525446	460		
2TP04525458	575		
2TP04540925	230	9kW Electric Heat	All 42" Cabinet 6.5, 7.5 and 8.5 Ton Models
2TP04540946	460		
2TP04540958	575		
2TP04541825	230	18kW Electric Heat	All 42" 6.5, 7.5 and 8.5 Ton Models
2TP04541846	460		
2TP04541858	575		
2TP04542425	230	24kW Electric Heat	All 42" Cabinet 6.5, 7.5 and 8.5 Ton Models
2TP04542446	460		
2TP04542458	575		
2TP04543625	230	36kW Electric Heat	All 42" Cabinet 6.5, 7.5 and 8.5 Ton Models
2TP04543646	460		
2TP04543658	575		

Accessories (Continued)

Field Installed Accessories - Fresh Air

MODEL	VOLTAGE	DESCRIPTION	WHERE USED
1FA0413	All	Manual Outside Air Damper 0-35%, Downflow	All Cabinets
1FA0414	All	Manual Outside Air Damper 0-100%, Downflow	All Cabinets
1EH0408	All	Barometric Relief Kit for Power Exhaust, Horizontal Application	All Cabinets
2EC0401	All	Single Enthalpy Control	All Cabinets
2EC0402	All	Dual Enthalpy Control (Includes 2 Sensors)	All Cabinets
2EE04707624	All	Economizer for Downflow, End Return Horizontal, or ERV Applications. Includes FA Hood, Exhaust Hood w/ Baro Relief	All 50" Cabinets
2EE04707424	All	Economizer for Downflow, End Return Horizontal, or ERV Applications. Includes FA Hood, Exhaust Hood w/ Baro Relief	All 42" Cabinets
2EE04706924	All	Horizontal Economizer without Barometric Relief	All Cabinets
2MD04703824	All	Motorized Damper, Downflow without Barometric Relief	All Cabinets
2MD04703924	All	Motorized Damper, Horizontal without Barometric Relief	All Cabinets
2PE04704706*	230	Power Exhaust 230V Downflow or Horizontal	All Cabinets
2PE04704746*	460	Power Exhaust 460V Downflow or Horizontal	All Cabinets
2PE04704758*	575	Power Exhaust 575V Downflow or Horizontal	All Cabinets

Field Installed Accessories - Controls

MODEL	VOLTAGE	DESCRIPTION	WHERE USED
2AP0401	All	Air Proving Switch	All Units
2AQ04700324	All	CO2 Space Accessory	All Units
2AQ04700424	All	CO2 Unit Accessory	All Units
2DF0402	All	Dirty Air Switch	All Units
2SH0401	All	Wall Mounted humidity sensor-For use with MagnaDry Reheat or space humidity input to Smart Equipment™ board.	All Cabinets
2SD04700824	All	Smoke Detector for Supply	All Gen 5 units and greater with 2" & 4" Filters
2SD04700924	All	Smoke Detector for Return	All Gen 5 units and greater with 2" & 4" Filters
2SD04701024	All	Smoke Detector for Supply and Return	All Gen 5 units and greater with 2" & 4" Filters
S1-YK-MAP1810-0P	All	MAP (Mobile Access Portal) Gateway- For use with Smart Equipment™ Control.	All Units
S1-MP-PRTKIT-0P	All	MAP (Multiple Access Portal) Gateway Kit- Replacement MAP gateway protective case, lanyard and communication cable. Use only to replace worn or damaged components.	All Units

Field Installed Accessories - Electrical

MODEL	VOLTAGE	DESCRIPTION	WHERE USED
2LA04704632	All	Low Ambient Kit	3 - 10T Units
2LA04704633	All	Low Ambient Kit	12.5T Units

Guide Specifications

GENERAL

Units shall be manufactured by York International Unitary Products in an ISO 9001 certified facility. YORK® Predator® units are convertible single packages with a common footprint cabinet and common roof curb for all 6.5 through 12.5 ton models. All units have two compressors with independent R-410A refrigeration circuits to provide 2 stages of cooling. The units were designed for light commercial applications and can be easily installed on a roof curb, slab, or frame. All Predator® units are self-contained and assembled on rigid full perimeter base rails allowing for 3-way forklift access and overhead rigging. Every unit is completely charged with R-410A, wired, piped, and tested at the factory to provide a quick and easy field installation. All units are convertible between side and down airflow. Independent economizer designs are used on side and down discharge applications, as well as all tonnage sizes. Predator® units are available in the following configurations: cooling only, cooling with electric heat, cooling with gas heat, heat pump, and heat pump with electric heat. Electric heaters are available as factory-installed options or field-installed accessories.

DESCRIPTION

Units shall be factory assembled, single package, (Elec/Elec, Gas/Elec), designed for outdoor installation. They shall have built in field convertible duct connections for down discharge supply/return or horizontal discharge supply/return and be available with factory installed options or field installed accessories. The units shall be factory wired, piped and charged with R-410A refrigerant and factory tested prior to shipment. All unit wiring shall be both numbered and color coded. The cooling performance shall be rated in accordance with DOE and AHRI test procedures. Units

shall be CSA certified to ANSI Z21.47 and UL 1995/CAN/CSA No. 236-M90 standards.

UNIT CABINET

Unit cabinet shall be constructed of galvanized steel with exterior surfaces coated with a non-chalking, powder paint finish, certified at 1000 hour salt spray test per ASTM-B117 standards. Indoor blower sections shall be insulated with up to 1” thick insulation coated on the airside. Either aluminum foil faced or elastometric rubber insulation shall be used in the unit’s compartments and be fastened to prevent insulation from entering the air stream. Cabinet doors shall be hinged with toolless access for easy servicing and maintenance. Full perimeter base rails shall be provided to assure reliable transit of equipment, overhead rigging, fork truck access and proper sealing on roof curb applications. Disposable 2” filters shall be furnished as standard and be accessible through hinged access door. Fan performance measuring ports shall be provided on the outside of the cabinet to allow accurate air measurements of evaporator fan performance without removing panels or creating bypass of the coils. Condensate pan shall be slide out design, constructed of a non corrosive material, internally sloped and conforming to ASHRAE 62-B9 standards. Condensate connection shall be a minimum of ¾” I.D. female and be rigid mount connection.

INDOOR (EVAPORATOR) FAN ASSEMBLY

Fan shall be a belt drive assembly and include an adjustable pitch motor pulley. Job site selected brake horsepower shall not exceed the motors nameplate horsepower rating plus the service factor. Units shall be designed to operate within the service factor. Fan wheel shall be double inlet type with forward curve blades, dynamically balanced to operate smoothly throughout the entire range of operation. Airflow design shall be constant volume. Bearings shall be sealed and permanently lubricated for longer life and no maintenance. Entire blower assembly and motor shall be slide out design.

OUTDOOR (CONDENSER) FAN ASSEMBLY

The outdoor fans shall be of the direct drive type, discharge air vertically, have aluminum blades riveted to corrosion resistant steel spider brackets and shall be dynamically balanced for smooth operation. The outdoor fan motors shall have permanently lubricated bearings internally protected against overload conditions and staged independently. A cleaning window shall be provided on two sides of the units for coil cleaning.

REFRIGERANT COMPONENTS

Compressors:

a. Shall be fully hermetic type, direct drive, internally protected with internal high-pressure relief and over temperature protection. The hermetic motor shall be suction gas cooled and have a voltage range of + or – 10% of the unit nameplate voltage.

b. Shall have internal spring isolation and sound muffling to minimize vibration and noise, and be externally isolated on a dedicated, independent mounting.

Coils:

a. Evaporator coils shall have aluminum plate fins mechanically bonded to seamless internally enhanced copper tubes with all joints brazed. Special Phenolic coating shall be available as a factory option.

b. Evaporator coils shall be of the direct expansion, draw-thru design.

c. Condenser coils shall have Mirco-Channel aluminum tube, aluminum fins.

d. Condenser coils shall be of the direct expansion, draw-thru design.

Refrigerant Circuit and Refrigerant Safety Components shall include:

a. Independent fixed-orifice or thermally operated expansion devices.

b. Solid core filter drier/strainer to eliminate any moisture or foreign matter.

c. Accessible service gage connections on both suction and discharge lines to charge, evacuate, and measure refrigerant pressure during any necessary servicing or troubleshooting, without losing charge.

d. The unit shall have two independent refrigerant circuits, equally split in 50% capacity increments.

Unit Controls:

a. Unit shall be complete with self-contained low-voltage control circuit protected by a resettable circuit breaker on the 24-volt transformer side.

b. Unit shall incorporate a lockout circuit which provides reset capability at the space thermostat or base unit, should any of the following standard safety devices trip and shut off compressor.

   1. Loss-of-charge/Low-pressure switch.
   2. High-pressure switch.
   3. Freeze condition sensor on evaporator coil. If any of these safety devices trip, the LCD screen will display the alarm message.

c. Unit shall incorporate "AUTO RESET" compressor over temperature, over current protection.

d. Unit shall operate with conventional thermostat designs and have a low voltage terminal strip for easy hook-up.

e. Unit control board shall have on-board diagnostics and fault message display.

f. Standard controls shall include anti-short cycle and low voltage protection, and permit cooling operation down to a selectable value as low as 0 °F.

g. Control board shall monitor each refrigerant safety switch independently.

GAS HEATING SECTION (IF EQUIPPED)

Heat exchanger and exhaust system shall be constructed of aluminized steel and shall be designed with induced draft com-

bustion with post purge logic, energy saving direct spark ignition, and redundant main gas valve. The heat exchanger shall be of the tubular type, constructed of T1-40 aluminized steel for corrosion resistance and allowing minimum mixed air entering temperature of 40 ºF. Burners shall be of the in-shot type, constructed of aluminum-coated steel. All gas piping shall enter the unit cabinet at a single location, through either the side or bottom, without any field modifications. An integrated control board shall provide timed control of evaporator fan functioning and burner ignition. Heating section shall be provided with the following minimum protection:

a. Primary and auxiliary high-temperature limit switches.

b. Induced draft pressure sensor.

c. Flame roll out switch (manual reset).

d. Flame proving controls.

e. All two stage units shall have two independent stages of capacity (60% 1st stage, 100% 2nd stage).

ELECTRIC HEATING SECTION (IF EQUIPPED)

An electric heating section, with nickel chromium elements, shall be provided in a range of 9 thru 54 KW, offering two states of capacity all sizes. The heating section shall have a primary limit control(s) (automatic reset) to prevent the heating element system from operating at an excessive temperature. The Heating Section assembly shall slide out of the unit for easy maintenance and service. Units with Electric Heating Sections shall be wired for a single point power supply with branch circuit fusing (where required).

UNIT OPERATING CHARACTERISTICS

Unit shall be capable of starting and running at 125 ºF outdoor temperature, exceeding maximum load criteria of AHRI Standard 340/360. The compressor, with standard controls, shall be capable of operation down to 0 ºF outdoor temperature. Unit shall be provided with fan time delay to prevent cold air delivery before heat exchanger warms up. (Gas heat only)

ELECTRICAL REQUIREMENTS - All unit power wiring shall enter unit cabinet at a single factory provided location and be capable of side or bottom entry to minimize roof penetrations and avoid unit field modifications. Separate side and bottom openings shall be provided for the control wiring.

STANDARD LIMITED WARRANTIES - Compressor – 5 Years, Heat Exchanger – 10 Years, Elect. Heat Elem. – 5 Years, Parts – 1 Year

FACTORY INSTALLED OPTIONAL OUTDOOR AIR (Shall be made available by either/or):

- **DRY BULB AUTOMATIC ECONOMIZER -** Outdoor and return air dampers that are interlocked and positioned by a fully-modulating, spring-return damper actuator. The maximum leakage rate for the outdoor air intake dampers shall be designed to meet ASHRAE 90.1-2010, AMCA 511 Class 1A damper, and the International Energy Conservation Code (IECC) certification requirements by achieving leakage rates of 3 cfm/sq. ft. at 1" of static pressure. Changeover from compressor to economizer operation shall be provided by an integral electronic enthalpy control that feeds input into the basic module. The outdoor intake opening shall be covered with a rain hood that matches the exterior of the unit. Water eliminator/filters shall be provided.

  Simultaneous economizer/compressor operation is also possible. Dampers shall fully close on power loss. Available with barometric relief and power exhaust.
- **MOTORIZED OUTDOOR AIR DAMPERS -** Outdoor and return air dampers that are interlocked and positioned by a 2- position, spring-return damper actuator. A unit-mounted potentiometer shall be provided to adjust the outdoor and return air damper assembly to take in the design CFM of outdoor air to meet the ventilation requirements of the conditioned space during normal operation. Whenever the indoor fan motor is energized, the dampers open up to one of two pre-selected positions - regardless of the outdoor air enthalpy. Dampers return to the fully closed position when the indoor fan motor is de-energized. Dampers shall fully close on power loss.

ADDITIONAL FACTORY INSTALLED OPTIONS

- **ALTERNATE INDOOR BLOWER MOTOR** – For applications with high restrictions, units are available with optional indoor blower motors that provide higher static output and/or higher airflow.
- **Variable Air Volume (VAV)** – The VAV option using a variable frequency drive (VFD) shall be available on 6.5 through 12.5 ton, models for applications requiring a constant supply-duct static pressure. Units equipped for VAV shall be controlled by a duct pressure transducer with a 0 - 5” WC pressure range. The pressure transducer shall provide a 0 - 5 VDC output signal to a VAV control board which, in turn shall provide a 2 - 10 VDC speed reference signal to the VFD. The VAV control board shall operate using factory-installed Supply Air, Return Air and Outside Air Temperature Sensors with a nominal resistance of 10,000 Ohms. Units equipped with VFD’s shall have factory-installed manual bypass as an option.
- **CONVENIENCE OUTLET (POWERED/NON-POWERED)**– Unit can be provided with an optional 120VAC GFCI outlet with cover on the corner of the unit housing the compressors.
- **ELECTRIC HEAT** - Electric Heaters range from 9 kW to 54 kW and are available in all the voltage options of the base unit.
- **PHASE MONITOR** - Designed to prevent damage in out-of-phase condition.
- **COIL GUARD** - Designed to prevent condenser coil damage.
- **BAS CONTROLS HARDWARE** - Include supply air sensor, return air sensor, dirty filter indicator and air proving switch.
- **DIRTY FILTER SWITCH** – This kit includes a differential pressure switch that energizes the fault light on the unit thermostat, indicating that there is an abnormally high-pressure drop across the filters.

- **BREAKER** – An HACR breaker can be factory installed on gas heat units or cooling units with electric heat.
- **DISCONNECT SWITCH** - A disconnect can be factory installed on a cooling only units sized for the largest electric heat available.
- **STAINLESS STEEL HEAT EXCHANGER** – For applications in a corrosive environment, this option provides a full stainless steel heat exchanger assembly.
- **SMOKE DETECTOR** – A smoke detector can be factory mounted and wired in the supply and/or return air compartments.

OTHER PRE-ENGINEERED ACCESSORIES AVAILABLE

- **ROOF CURB** - 14” and 8” high, full perimeter knockdown curb, with hinged design for quick assembly.
- **BAROMETRIC RELIEF DAMPER** – (Unit mounted – Downflow, Duct Mounted – Horizontal) – Contains a rain hood, air inlet screen, exhaust damper and mounting hardware. Used to relieve internal air pressure through the unit during economizer operation.
- **PROPANE CONVERSION KIT** – Contains new orifices and gas valve springs to convert from natural to L.P. gas.
- **ECONOMIZER** (Downflow and Horizontal flow)
- **POWER EXHAUST** – (Unit mount – Downflow, Duct mount – Horizontal flow)
- **DUAL ENTHALPY KIT** - Provides a second input to economizer to monitor return air.

Physical Data

ZF078-150 Physical Data

Component	Models									
	ZF078		ZF090		ZF102		ZF120		ZF150	
Nominal Tonnage	**6.5**		**7.5**		**8.5**		**10**		**12.5**	
AHRI COOLING PERFORMANCE										
Gross Capacity @ AHRI A point (Mbh)	81000		86500		104000		126000		156000	
AHRI net capacity (Mbh)	78000		84000		101000		118000		149500	
EER	11.2		11.2[1]/11.0[2]		11.2[1]/11.0[2]		11.2[1]/11.0[2]		11.0[1]/10.8[2]	
IEER with Constant Volume	12.9[1]/12.7[2]		-		12.9[1]/12.7[2]		-		-	
IEER with Intellispeed	13.9[1]/13.7[2]		13.1		14.0[1]/13.8[2]		14.4[1]/14.2[2]		12.8[1]/12.6[2]	
IEER with VAV	13.4[1]/13.2[2]		12.9[1]/12.7[2]		13.1[1]/12.9[2]		13.2[1]/13.0[2]		12.6[1]/12.4[2]	
CFM	2500		2500		3400		4000		4050	
System power (KW)	6.95		7.87		8.90		10.70		13.40	
Refrigerant type	R-410A		R-410A		R-410A		R-410A		R-410A	
Refrigerant charge (lb-oz)										
System 1	4-8		4-10		5-12		8-4		7-10	
System 2	4-8		4-8		5-12		7-2		7-4	
AHRI HEATING PERFORMANCE										
Heating model	N12	N18	N12	N18	N12	N18	N18	N24	N18	N24
Heat input (K Btu)	120	180	120	180	120	180	180	240	180	240
Heat output (K Btu)	96	144	96	144	96	144	144	192	144	192
AFUE %	-	-	-	-	-	-	-	-	-	-
Steady state efficiency (%)	80	80	80	80	80	80	80	80	80	80
No. burners	4	6	4	6	4	6	6	8	6	8
No. stages	2[3]	2[3]	2[3]	2[3]	2[3]	2[3]	2[3]	2[3]	2[3]	2[3]
Temperature Rise Range (ºF)	20-50	35-65	15-45	30-60	10-40	25-55	20-50	35-65	10-40	25-55
Gas Limit Setting (ºF)	165	165	165	165	215	195	195	150	195	150
Gas piping connection (in.)	3/4	3/4	3/4	3/4	3/4	3/4	3/4	3/4	3/4	3/4
DIMENSIONS (inches)										
Length	89		89		89		89		119-1/2	
Width	59		59		59		59		59	
Height	42		42		50-3/4		50-3/4		50-3/4	
OPERATING WT. (lbs.)	860		880		1007		1060		1253	
COMPRESSORS[4]										
Type	Recip		Scroll		Recip		Recip		Scroll	
Quantity	2		2		2		2		2	
Unit Capacity Steps (%)	50 / 100		50 / 100		50 / 100		50 / 100		50 / 100	
CONDENSER COIL DATA										
Face area (Sq. Ft.)	18.5		23.8		29.0		29.0		29	
Rows	1		1		1		1		1	
Fins per inch	23		23		23		23		23	
Tube diameter (in.)/mm	.71/18		.71/18		.71/18		1/25		1/25	
Circuitry Type	2-pass Microchannel		2-pass Microchannel		2-pass Microchannel		2-pass Microchannel		2-pass Microchannel	
EVAPORATOR COIL DATA										
Face area (Sq. Ft.)	10.6		10.6		13.2		13.2		13.2	
Rows	3		3		3		4		4	
Fins per inch	15		15		15		15		15	
Tube diameter	0.375		0.375		0.375		0.375		0.375	

ZF078-150 Physical Data (Continued)

Component	Models									
	ZF078		ZF090		ZF102		ZF120		ZF150	
Nominal Tonnage	**6.5**		**7.5**		**8.5**		**10**		**12.5**	
Circuitry Type	Intertwined		Intertwined		Intertwined		Intertwined		Intertwined	
Refrigerant control	TXV		TXV		TXV		TXV		TXV	
CONDENSER FAN DATA										
Quantity of Fans	2		2		2		2		4	
Fan diameter (Inch)	24		24		24		24		24	
Type	Prop		Prop		Prop		Prop		Prop	
Drive type	Direct		Direct		Direct		Direct		Direct	
Quantity of motors	2		2		2		2		4	
Motor HP each	1/3		1/3		3/4		3/4		3/4	
No. speeds	1		1		1		1		1	
RPM	850		850		1110		1110		1110	
Total CFM	6200		7600		9500		9500		11200	
BELT DRIVE EVAP FAN DATA										
Quantity	1		1		1		1		1	
Fan Size (Inch)	12 x 12		12 x 12		15 x 15		15 x 15		15 x 15	
Type	Centrifugal		Centrifugal		Centrifugal		Centrifugal		Centrifugal	
Motor Sheave	1VM50	1VM50	1VM50	1VM50	1VM50	1VM50	1VM50	1VM50	1VM50	1VP56
Blower Sheave	AK74	AK64	AK74	AK61	AK89	AK74	AK84	AK74	AK74	BK77
Belt	A49	A49	A49	A49	A56	A54	A56	A54	A54	BX55
Motor HP each	1-1/2	2	1-1/2	3	2	3	2	3	3	5
RPM	1725	1725	1725	1725	1725	1725	1725	1725	1725	1725
Frame size	56	56	56	56	56	56	56	56	56	184T
FILTERS										
Quantity - Size	4 - (24 x 16 x 2)[5, 6]		4 - (24 x 16 x 2)[4, 5]		4 - (24 x 20 x 2)[4, 5]		4 - (24 x 20 x 2)[4, 5]		4 - (24 x 20 x 2)[4, 5]	
	4 - (24 x 16 x 4)[7]		4 - (24 x 16 x 4)[6]		4 - (24 x 20 x 4)[6]		4 - (24 x 20 x 4)[6]		4 - (24 x 20 x 4)[6]	

1. Cooling Only Unit or Cooling Unit with Electric Heat
2. Cooling Unit with Gas Heat
3. 1ST Stage 60% of 2nd Stage
4. ZF090 and ZF150 have crankcase heaters standard
5. 2 In. Throwaway, Standard, MERV (Minimum Efficiency Reporting Value) 3
6. 2 In. Pleated, Optional, MERV 8
7. 4 In. Pleated, Optional, MERV 13

ZF078-150 Unit Limitations

Size (Tons)	Model	Unit Voltage	Unit Limitations		
			Applied Voltage		Outdoor DB Temp
			Min	Max	Max (°F)
078 (6.5)	ZF	208/230-3-60	187	252	125
		460-3-60	432	504	125
		575-3-60	540	630	125
090 (7.5)	ZF	208/230-3-60	187	252	125
		460-3-60	432	504	125
		575-3-60	540	630	125
102 (8.5)	ZF	208/230-3-60	187	252	125
		460-3-60	432	504	125
		575-3-60	540	630	125
120 (10)	ZF	208/230-3-60	187	252	125
		460-3-60	432	504	125
		575-3-60	540	630	125
150 (12.5)	ZF	208/230-3-60	187	252	125
		460-3-60	432	504	125
		575-3-60	540	630	125

Capacity Performance

ZF078-150 Cooling Capacities

ZF078 (6.5 Ton)

Air on Evaporator Coil		Temperature of Air on Condenser Coil															
		Total Capacity[1] (MBh)	Total Input (kW)[2]	Sensible Capacity (MBh) Return Dry Bulb (°F)						Total Capacity[1] (MBh)	Total Input (kW)[2]	Sensible Capacity (MBh) Return Dry Bulb (°F)					
CFM	WB (°F)			90	85	80	75	70	65			90	85	80	75	70	65
		75°F								**85°F**							
1625	77	102.9	5.0	41.5	34.0	26.6	-	-	-	96.2	5.6	39.9	32.5	25.0	-	-	-
	72	94.8	5.0	53.8	46.4	38.9	31.5	-	-	88.3	5.5	51.6	44.2	36.7	29.3	-	-
	67	86.7	5.0	66.1	58.7	51.3	43.8	36.4	-	80.3	5.5	63.3	55.8	48.4	41.0	33.6	-
	62	79.2	5.0	79.2	72.4	61.4	54.0	46.6	39.1	72.8	5.4	72.8	69.4	58.6	51.1	43.7	36.3
1950	77	106.6	5.0	46.7	38.0	29.3	-	-	-	99.6	5.6	44.9	36.2	27.6	-	-	-
	72	98.2	5.0	60.3	51.5	42.8	34.1	-	-	91.4	5.5	57.8	49.1	40.4	31.7	-	-
	67	89.8	5.0	73.8	65.1	56.3	47.6	38.9	-	83.1	5.5	70.6	61.9	53.3	44.6	35.9	-
	62	82.0	5.0	82.0	77.5	67.5	58.8	50.0	41.3	75.4	5.4	75.4	73.1	64.4	55.8	47.1	38.4
	57	79.2	4.9	79.2	79.2	71.1	62.4	53.6	44.9	74.4	5.4	74.4	74.4	66.4	57.7	49.1	40.4
2275	77	110.2	5.0	52.0	41.9	31.9	-	-	-	103.0	5.6	49.9	40.0	30.1	-	-	-
	72	101.6	5.0	66.7	56.7	46.7	36.6	-	-	94.4	5.5	63.9	54.0	44.1	34.2	-	-
	67	92.9	5.0	81.5	71.4	61.4	51.4	41.3	-	85.9	5.5	78.0	68.1	58.1	48.2	38.3	-
	62	84.8	5.0	84.8	82.5	73.6	63.6	53.5	43.5	77.9	5.4	77.9	76.8	70.3	60.4	50.5	40.6
	57	81.9	4.9	81.9	81.9	77.5	67.5	57.4	47.4	76.9	5.4	76.9	76.9	72.5	62.5	52.6	42.7
2600	77	113.9	5.0	57.2	45.9	34.5	-	-	-	106.3	5.6	54.9	43.7	32.6	-	-	-
	72	104.9	5.0	73.2	61.9	50.5	39.2	-	-	97.5	5.5	70.1	58.9	47.8	36.6	-	-
	67	95.9	5.0	89.2	77.8	66.5	55.2	43.8	-	88.7	5.5	85.3	74.2	63.0	51.8	40.7	-
	62	87.6	5.0	87.6	87.6	79.7	68.3	57.0	45.7	80.4	5.5	80.4	80.4	76.2	65.0	53.8	42.7
	57	84.6	4.9	84.6	84.6	83.9	72.6	61.2	49.9	79.4	5.4	79.4	79.4	78.5	67.3	56.2	45.0
2925	72	107.2	5.0	78.2	65.9	53.6	41.4	-	-	99.5	5.6	75.3	63.1	51.0	38.8	-	-
	67	98.0	5.0	94.6	82.9	70.6	58.4	46.1	-	90.5	5.5	88.8	79.3	67.2	55.0	42.9	-
	62	89.5	5.0	89.5	89.5	85.5	73.3	61.0	48.7	82.0	5.5	82.0	82.0	79.9	67.8	55.6	43.5
	57	86.5	4.9	86.5	86.5	86.1	73.8	61.6	49.3	81.0	5.4	81.0	81.0	80.5	68.4	56.2	44.1
3250	72	109.4	5.0	83.1	70.0	56.8	43.6	-	-	101.4	5.6	80.4	67.3	54.2	41.0	-	-
	67	100.1	5.0	100.1	87.9	74.7	61.6	48.4	-	92.3	5.5	92.3	84.5	71.4	58.3	45.1	-
	62	91.4	5.0	91.4	91.4	91.4	78.2	65.0	51.8	83.6	5.5	83.6	83.6	83.6	70.5	57.4	44.2
	57	88.3	4.9	88.3	88.3	88.3	75.1	61.9	48.7	82.5	5.4	82.5	82.5	82.5	69.4	56.3	43.1
		95°F								**105°F**							
1625	77	89.6	6.1	38.3	30.9	23.5	-	-	-	82.4	6.7	33.7	28.5	21.2	-	-	-
	72	81.7	6.1	49.3	41.9	34.5	27.1	-	-	74.8	6.6	46.6	39.3	31.9	24.6	-	-
	67	73.9	6.0	60.4	53.0	45.6	38.2	30.8	-	67.2	6.5	59.4	50.0	42.7	35.4	28.1	-
	62	66.5	5.9	66.5	66.5	55.7	48.3	40.9	33.5	61.3	6.4	61.3	61.3	51.7	44.4	37.1	29.8
1950	77	92.6	6.1	43.0	34.4	25.8	-	-	-	85.1	6.7	40.4	31.9	23.4	-	-	-
	72	84.5	6.1	55.2	46.6	38.0	29.4	-	-	77.3	6.6	52.3	43.8	35.3	26.8	-	-
	67	76.5	6.0	67.4	58.8	50.2	41.6	33.0	-	69.4	6.5	64.2	55.7	47.2	38.7	30.2	-
	62	68.7	5.9	68.7	68.7	61.4	52.8	44.2	35.6	63.3	6.4	63.3	63.3	57.2	48.6	40.1	31.6
	57	69.5	5.9	69.5	69.5	61.7	53.1	44.5	35.9	61.4	6.4	61.4	61.4	53.9	45.4	36.9	28.4
2275	77	95.7	6.2	47.8	38.0	28.2	-	-	-	87.8	6.8	47.1	35.3	25.6	-	-	-
	72	87.3	6.1	61.1	51.3	41.5	31.8	-	-	79.7	6.7	58.1	48.4	38.7	29.0	-	-
	67	79.0	6.0	74.4	64.7	54.9	45.1	35.3	-	71.7	6.5	69.0	61.4	51.7	42.0	32.3	-
	62	71.0	5.9	71.0	71.0	67.0	57.2	47.4	37.6	65.3	6.4	65.3	65.3	62.6	52.9	43.2	33.5
	57	71.8	6.0	71.8	71.8	67.4	57.6	47.8	38.0	63.3	6.4	63.3	63.3	59.0	49.3	39.6	29.9
2600	77	98.7	6.2	52.6	41.6	30.6	-	-	-	90.5	6.8	53.7	38.7	27.8	-	-	-
	72	90.1	6.1	67.0	56.0	45.1	34.1	-	-	82.2	6.7	63.8	52.9	42.0	31.1	-	-
	67	81.5	6.0	81.5	70.5	59.5	48.5	37.5	-	73.9	6.6	73.9	67.1	56.2	45.3	34.4	-
	62	73.3	6.0	73.3	73.3	72.7	61.7	50.7	39.7	67.3	6.5	67.3	67.3	68.0	57.2	46.3	35.4
	57	74.1	6.0	74.1	74.1	73.1	62.1	51.1	40.1	65.3	6.4	65.3	65.3	64.1	53.2	42.4	31.5
2925	72	91.7	6.1	72.4	60.3	48.3	36.3	-	-	83.6	6.7	69.1	57.1	45.1	33.2	-	-
	67	83.0	6.0	83.0	75.8	63.8	51.7	39.7	-	75.2	6.6	75.1	70.9	60.4	48.4	36.5	-
	62	74.6	6.0	74.6	74.6	74.3	62.2	50.2	38.2	68.5	6.5	68.5	68.5	68.9	56.9	44.9	33.0
	57	75.5	6.0	75.5	75.5	74.9	62.9	50.9	38.8	66.4	6.4	66.4	66.4	65.9	53.9	41.9	30.0
3250	72	93.4	6.1	77.7	64.6	51.5	38.4	-	-	85.1	6.7	74.3	61.3	48.3	35.2	-	-
	67	84.4	6.0	84.4	81.1	68.1	55.0	41.9	-	76.4	6.6	76.4	74.8	64.6	51.5	38.5	-
	62	75.9	6.0	75.9	75.9	75.9	62.8	49.7	36.6	69.7	6.5	69.7	69.7	69.7	56.6	43.6	30.5
	57	76.8	6.0	76.8	76.8	76.8	63.7	50.6	37.5	67.6	6.4	67.6	67.6	67.6	54.5	41.5	28.5

ZF078 (6.5 Ton) (Continued)

Air on Evaporator Coil		Temperature of Air on Condenser Coil															
		Total Capacity[1] (MBh)	Total Input (kW)[2]	Sensible Capacity (MBh) Return Dry Bulb (°F)						Total Capacity[1] (MBh)	Total Input (kW)[2]	Sensible Capacity (MBh) Return Dry Bulb (°F)					
CFM	WB (°F)			90	85	80	75	70	65			90	85	80	75	70	65
		115°F								**125°F**							
1625	77	75.2	7.3	29.2	26.1	18.9	-	-	-	68.0	7.9	28.3	22.9	16.6	-	-	-
	72	67.9	7.1	43.8	36.6	29.3	22.1	-	-	60.9	7.7	41.0	33.9	26.8	19.6	-	-
	67	60.5	7.0	58.4	47.1	39.8	32.6	25.4	-	53.8	7.5	53.8	44.1	36.9	29.8	22.7	-
	62	56.1	6.8	56.1	56.1	47.7	40.5	33.3	26.0	50.9	7.3	50.9	50.9	43.7	36.6	29.4	22.3
1950	77	77.6	7.3	37.8	29.4	20.9	-	-	-	70.1	7.9	37.5	26.8	18.5	-	-	-
	72	70.0	7.2	49.4	41.0	32.6	24.2	-	-	62.7	7.7	46.5	38.1	29.8	21.5	-	-
	67	62.4	7.0	61.0	52.6	44.2	35.8	27.4	-	55.4	7.5	55.4	49.5	41.2	32.9	24.5	-
	62	57.8	6.9	57.8	57.8	52.9	44.5	36.1	27.7	52.4	7.4	52.4	52.4	48.7	40.4	32.1	23.8
	57	53.2	6.8	53.2	53.2	46.1	37.7	29.2	20.8	45.1	7.2	45.1	45.1	38.3	29.9	21.6	13.3
2275	77	80.0	7.4	46.3	32.6	23.0	-	-	-	72.1	8.0	46.8	30.8	20.4	-	-	-
	72	72.2	7.2	55.0	45.4	35.8	26.2	-	-	64.6	7.8	51.9	42.4	32.9	23.4	-	-
	67	64.3	7.0	63.6	58.2	48.6	39.0	29.4	-	57.0	7.6	57.0	54.9	45.4	35.9	26.4	-
	62	59.6	6.9	59.6	59.6	58.2	48.6	39.0	29.4	53.9	7.4	53.9	53.9	53.8	44.3	34.8	25.3
	57	54.8	6.8	54.8	54.8	50.6	41.0	31.4	21.8	46.4	7.2	46.4	46.4	42.2	32.7	23.2	13.7
2600	77	82.3	7.4	54.9	35.9	25.1	-	-	-	74.2	8.0	56.0	34.7	22.3	-	-	-
	72	74.3	7.2	60.6	49.8	39.0	28.2	-	-	66.4	7.8	57.3	46.7	36.0	25.3	-	-
	67	66.2	7.1	66.2	63.7	52.9	42.1	31.4	-	58.6	7.6	58.6	58.6	49.7	39.0	28.3	-
	62	61.4	7.0	61.4	61.4	63.4	52.6	41.9	31.1	55.5	7.5	55.5	55.5	55.5	48.1	37.4	26.8
	57	56.5	6.9	56.5	56.5	55.2	44.4	33.6	22.8	47.7	7.3	47.7	47.7	46.2	35.6	24.9	14.2
2925	72	75.5	7.3	65.8	53.9	42.0	30.1	-	-	67.4	7.8	62.5	50.7	38.9	27.0	-	-
	67	67.3	7.1	67.3	66.1	57.0	45.1	33.2	-	59.5	7.6	59.5	59.5	53.6	41.8	30.0	-
	62	62.4	7.0	62.4	62.4	63.4	51.5	39.7	27.8	56.3	7.5	56.3	56.3	56.3	46.2	34.4	22.6
	57	57.4	6.9	57.4	57.4	56.8	44.9	33.0	21.1	48.4	7.3	48.4	48.4	47.7	35.9	24.1	12.3
3250	72	76.8	7.3	71.0	58.0	45.0	32.0	-	-	68.5	7.9	67.6	54.7	41.7	28.8	-	-
	67	68.4	7.1	68.4	68.4	61.1	48.1	35.1	-	60.5	7.7	60.5	60.5	57.6	44.6	31.7	-
	62	63.4	7.0	63.4	63.4	63.4	50.4	37.5	24.5	57.2	7.5	57.2	57.2	57.2	44.3	31.3	18.4
	57	58.4	6.9	58.4	58.4	58.4	45.4	32.4	19.4	49.1	7.4	49.1	49.1	49.1	36.2	23.3	10.3

1. These capacities are gross ratings. For net capacity, deduct air blower motor, MBh = 3.415 x kW. Refer to the appropriate Blower Performance Table for the kW of the supply air blower motor.
2. These ratings include the condenser fan motors (total 1 kW) and the compressor motors but not the supply air blower motor.

ZF090 (7.5 Ton)

Air on Evaporator Coil		Temperature of Air on Condenser Coil															
		Total Capacity[1] (MBh)	Total Input (kW)[2]	Sensible Capacity (MBh) Return Dry Bulb (°F)						Total Capacity[1] (MBh)	Total Input (kW)[2]	Sensible Capacity (MBh) Return Dry Bulb (°F)					
CFM	WB (°F)			90	85	80	75	70	65			90	85	80	75	70	65
		75°F								**85°F**							
1875	77	112.9	4.9	50.2	41.8	33.4	-	-	-	109.6	6.0	47.9	40.1	32.4	-	-	-
	72	104.5	5.0	63.5	55.1	46.7	38.3	-	-	100.0	6.0	60.0	52.3	44.5	36.8	-	-
	67	96.0	5.0	76.8	68.4	60.0	51.6	43.2	-	90.4	6.0	72.2	64.4	56.7	48.9	41.2	-
	62	91.1	4.8	91.1	75.9	68.7	60.3	51.9	43.5	83.2	5.9	83.2	75.6	66.6	58.9	51.1	43.4
2250	77	116.4	5.1	53.9	45.0	36.1	-	-	-	113.0	6.1	52.3	43.7	35.1	-	-	-
	72	107.6	5.1	68.3	59.4	50.5	41.5	-	-	103.2	6.0	65.5	56.9	48.2	39.6	-	-
	67	98.9	5.2	82.7	73.7	64.8	55.9	47.0	-	93.3	6.0	78.7	70.0	61.4	52.8	44.1	-
	62	93.9	5.0	93.9	83.7	74.3	65.3	56.4	47.5	85.9	6.0	85.9	80.8	72.1	63.5	54.9	46.3
	57	75.0	5.2	75.0	75.0	69.4	60.5	51.6	42.7	78.0	6.1	78.0	78.0	71.8	63.1	54.5	45.9
2625	77	119.8	5.2	57.7	48.2	38.8	-	-	-	116.5	6.1	56.8	47.3	37.8	-	-	-
	72	110.8	5.3	73.1	63.7	54.2	44.8	-	-	106.4	6.1	71.0	61.5	51.9	42.4	-	-
	67	101.8	5.4	88.6	79.1	69.7	60.2	50.8	-	96.2	6.1	85.1	75.6	66.1	56.6	47.1	-
	62	96.7	5.1	96.7	91.6	79.8	70.4	60.9	51.5	88.5	6.0	88.5	86.0	77.7	68.2	58.7	49.2
	57	77.2	5.4	77.2	77.2	74.6	65.2	55.7	46.3	80.4	6.1	80.4	80.4	77.3	67.8	58.2	48.7
3000	77	123.2	5.4	61.4	51.4	41.5	-	-	-	120.0	6.2	61.2	50.9	40.5	-	-	-
	72	114.0	5.5	77.9	68.0	58.0	48.0	-	-	109.5	6.2	76.4	66.0	55.6	45.3	-	-
	67	104.7	5.5	94.4	84.5	74.5	64.6	54.6	-	99.0	6.2	91.6	81.2	70.8	60.4	50.0	-
	62	99.5	5.3	99.5	99.5	85.3	75.4	65.4	55.5	91.2	6.1	91.2	91.2	83.2	72.8	62.4	52.1
	57	79.4	5.6	79.4	79.4	79.4	69.8	59.8	49.9	82.8	6.2	82.8	82.8	82.8	72.4	62.0	51.6
3375	72	115.0	5.4	84.2	72.8	61.4	50.0	-	-	110.9	6.1	82.3	70.6	59.0	47.3	-	-
	67	105.7	5.4	100.6	90.2	78.8	67.4	56.0	-	100.3	6.1	96.5	86.7	75.0	63.4	51.7	-
	62	100.4	5.2	100.4	100.4	93.1	81.7	70.3	58.9	92.3	6.0	92.3	92.3	88.2	76.5	64.8	53.1
	57	80.1	5.4	80.1	80.1	80.1	68.9	57.5	46.1	83.8	6.1	83.8	83.8	83.8	72.1	60.4	48.7
3750	72	116.1	5.2	90.4	77.6	64.7	51.9	-	-	112.2	6.0	88.2	75.2	62.3	49.3	-	-
	67	106.7	5.3	106.7	96.0	83.1	70.3	57.5	-	101.5	6.0	101.5	92.2	79.3	66.3	53.3	-
	62	101.4	5.1	101.4	101.4	100.9	88.0	75.2	62.4	93.4	6.0	93.4	93.4	93.1	80.2	67.2	54.2
	57	80.8	5.3	80.8	80.8	80.8	68.0	55.1	42.3	84.8	6.1	84.8	84.8	84.8	71.8	58.9	45.9
		95°F								**105°F**							
1875	77	106.2	7.1	45.6	38.5	31.4	-	-	-	96.9	8.0	38.4	32.9	25.9	-	-	-
	72	95.5	7.0	56.6	49.5	42.4	35.3	-	-	88.1	7.9	52.0	45.0	38.0	30.9	-	-
	67	84.8	6.9	67.6	60.5	53.4	46.3	39.2	-	79.3	7.9	65.6	57.1	50.0	43.0	36.0	-
	62	75.3	7.0	75.3	75.3	64.5	57.4	50.3	43.2	72.7	7.9	72.7	71.6	60.1	53.0	46.0	39.0
2250	77	109.7	7.0	50.7	42.4	34.1	-	-	-	99.7	7.9	45.2	36.8	28.4	-	-	-
	72	98.7	7.0	62.7	54.4	46.0	37.7	-	-	90.7	7.9	58.5	50.1	41.7	33.3	-	-
	67	87.7	6.9	74.6	66.3	58.0	49.6	41.3	-	81.7	7.8	71.8	63.4	55.0	46.6	38.1	-
	62	77.8	7.0	77.8	77.8	70.0	61.7	53.4	45.0	74.9	7.9	74.9	74.1	66.0	57.5	49.1	40.7
	57	80.9	6.9	80.9	80.9	74.1	65.7	57.4	49.1	76.5	7.8	76.5	75.7	68.1	59.7	51.3	42.8
2625	77	113.3	7.0	55.9	46.3	36.7	-	-	-	102.6	7.8	52.0	40.6	30.9	-	-	-
	72	101.9	6.9	68.8	59.2	49.6	40.1	-	-	93.3	7.8	65.0	55.2	45.4	35.6	-	-
	67	90.5	6.8	81.7	72.1	62.5	53.0	43.4	-	84.0	7.8	77.9	69.7	59.9	50.1	40.3	-
	62	80.3	6.9	80.3	80.3	75.6	66.0	56.4	46.8	77.0	7.8	77.0	76.6	71.9	62.1	52.3	42.5
	57	83.5	6.9	83.5	83.5	79.9	70.4	60.8	51.2	78.7	7.8	78.7	78.3	74.2	64.4	54.6	44.8
3000	77	116.8	7.0	61.1	50.3	39.4	-	-	-	105.5	7.8	58.7	44.5	33.3	-	-	-
	72	105.1	6.9	74.9	64.1	53.3	42.5	-	-	95.9	7.7	71.4	60.2	49.1	37.9	-	-
	67	93.4	6.8	88.8	77.9	67.1	56.3	45.5	-	86.4	7.7	84.1	76.0	64.8	53.6	42.5	-
	62	82.9	6.9	82.9	82.9	81.1	70.3	59.5	48.6	79.2	7.7	79.2	79.2	77.8	66.6	55.4	44.3
	57	86.1	6.8	86.1	86.1	85.8	75.0	64.2	53.3	80.9	7.7	80.9	80.9	80.2	69.1	57.9	46.7
3375	72	106.7	6.9	80.5	68.5	56.6	44.6	-	-	97.2	7.7	76.3	64.2	52.1	39.9	-	-
	67	94.8	6.8	92.5	83.2	71.2	59.3	47.3	-	87.5	7.7	86.4	80.4	68.7	56.6	44.5	-
	62	84.1	6.9	84.1	84.1	83.3	71.3	59.3	47.3	80.2	7.7	80.2	80.2	79.5	67.4	55.3	43.2
	57	87.5	6.8	87.5	87.5	87.3	75.3	63.4	51.4	81.9	7.7	81.9	81.9	81.6	69.5	57.4	45.3
3750	72	108.3	6.9	86.1	72.9	59.8	46.7	-	-	98.5	7.7	81.1	68.1	55.0	42.0	-	-
	67	96.2	6.8	96.2	88.5	75.4	62.2	49.1	-	88.7	7.7	88.7	84.8	72.7	59.6	46.6	-
	62	85.4	6.9	85.4	85.4	85.4	72.3	59.2	46.1	81.2	7.7	81.2	81.2	81.2	68.2	55.1	42.1
	57	88.8	6.8	88.8	88.8	88.8	75.7	62.6	49.4	83.0	7.7	83.0	83.0	83.0	70.0	56.9	43.9

ZF090 (7.5 Ton) (Continued)

Air on Evaporator Coil		Temperature of Air on Condenser Coil															
		Total Capacity[1] (MBh)	Total Input (kW)[2]	Sensible Capacity (MBh) Return Dry Bulb (°F)						Total Capacity[1] (MBh)	Total Input (kW)[2]	Sensible Capacity (MBh) Return Dry Bulb (°F)					
CFM	WB (°F)			90	85	80	75	70	65			90	85	80	75	70	65
		115°F								**125°F**							
1875	77	87.5	8.8	31.3	27.3	20.4	-	-	-	78.2	9.7	23.0	21.8	14.9	-	-	-
	72	80.7	8.8	47.5	40.5	33.5	26.6	-	-	73.2	9.8	42.9	36.0	29.1	22.2	-	-
	67	73.8	8.9	63.7	53.7	46.7	39.7	32.8	-	68.3	9.9	61.8	50.3	43.4	36.5	29.6	-
	62	70.1	8.8	70.1	67.8	55.6	48.7	41.7	34.7	67.5	9.8	67.5	64.1	51.2	44.3	37.4	30.5
2250	77	89.7	8.7	39.6	31.2	22.7	-	-	-	79.7	9.6	34.1	25.5	17.0	-	-	-
	72	82.7	8.8	54.3	45.8	37.3	28.8	-	-	74.7	9.7	50.1	41.5	33.0	24.4	-	-
	67	75.7	8.8	68.9	60.5	52.0	43.5	35.0	-	69.6	9.8	66.1	57.5	49.0	40.4	31.9	-
	62	71.9	8.8	71.9	70.4	61.9	53.4	44.9	36.4	68.9	9.7	68.9	66.6	57.8	49.2	40.7	32.1
	57	72.1	8.8	72.1	70.6	62.1	53.6	45.1	36.6	67.6	9.7	67.6	65.4	56.1	47.5	39.0	30.4
2625	77	92.0	8.7	48.0	35.0	25.0	-	-	-	81.3	9.5	45.2	29.3	19.1	-	-	-
	72	84.7	8.7	61.1	51.1	41.1	31.1	-	-	76.2	9.6	57.2	47.0	36.8	26.6	-	-
	67	77.5	8.7	74.2	67.2	57.2	47.2	37.2	-	71.0	9.7	70.4	64.8	54.6	44.4	34.2	-
	62	73.7	8.7	73.7	72.9	68.1	58.1	48.1	38.1	70.3	9.6	70.3	69.2	64.4	54.2	44.0	33.8
	57	73.8	8.7	73.8	73.1	68.4	58.4	48.4	38.4	69.0	9.6	69.0	67.9	62.6	52.4	42.2	32.0
3000	77	94.2	8.6	56.4	38.8	27.3	-	-	-	82.9	9.4	56.3	33.0	21.2	-	-	-
	72	86.8	8.6	67.9	56.4	44.9	33.4	-	-	77.6	9.5	64.4	52.5	40.7	28.8	-	-
	67	79.4	8.6	79.4	74.0	62.5	51.0	39.5	-	72.4	9.6	72.4	72.0	60.2	48.3	36.5	-
	62	75.5	8.6	75.5	75.5	74.4	62.9	51.4	39.9	71.8	9.5	71.8	71.8	71.0	59.2	47.3	35.5
	57	75.6	8.6	75.6	75.6	74.6	63.1	51.6	40.1	70.4	9.5	70.4	70.4	69.1	57.2	45.4	33.5
3375	72	87.7	8.6	72.0	59.8	47.5	35.3	-	-	78.2	9.5	67.8	55.4	43.0	30.7	-	-
	67	80.2	8.6	80.2	77.5	66.2	54.0	41.7	-	72.9	9.6	72.9	72.9	63.7	51.3	39.0	-
	62	76.2	8.6	76.2	76.2	75.7	63.5	51.2	39.0	72.3	9.5	72.3	72.3	71.9	59.6	47.2	34.8
	57	76.4	8.6	76.4	76.4	75.9	63.7	51.5	39.2	70.9	9.5	70.9	70.9	70.2	57.9	45.5	33.1
3750	72	88.6	8.6	76.1	63.2	50.2	37.3	-	-	78.7	9.5	71.2	58.3	45.4	32.6	-	-
	67	81.1	8.6	81.1	81.1	69.9	57.0	44.0	-	73.5	9.6	73.5	73.5	67.2	54.4	41.5	-
	62	77.0	8.6	77.0	77.0	77.0	64.1	51.1	38.1	72.8	9.5	72.8	72.8	72.8	59.9	47.1	34.2
	57	77.2	8.6	77.2	77.2	77.2	64.2	51.3	38.3	71.4	9.5	71.4	71.4	71.4	58.5	45.6	32.8

1. These capacities are gross ratings. For net capacity, deduct air blower motor, MBh = 3.415 x kW. Refer to the appropriate Blower Performance Table for the kW of the supply air blower motor.
2. These ratings include the condenser fan motors (total 1 kW) and the compressor motors but not the supply air blower motor.

ZF102 (8.5 Ton)

Air on Evaporator Coil		Temperature of Air on Condenser Coil															
		Total Capacity[1] (MBh)	Total Input (kW)[2]	Sensible Capacity (MBh)						Total Capacity[1] (MBh)	Total Input (kW)[2]	Sensible Capacity (MBh)					
CFM	WB (°F)			Return Dry Bulb (°F)								Return Dry Bulb (°F)					
				90	85	80	75	70	65			90	85	80	75	70	65
		75°F								**85°F**							
2125	77	134.7	6.6	59.8	50.4	41.2	-	-	-	126.8	7.2	55.9	46.6	37.4	-	-	-
	72	123.6	6.6	72.6	63.5	54.3	45.2	-	-	115.9	7.2	69.5	60.3	51.1	41.8	-	-
	67	112.5	6.5	85.3	76.5	67.4	58.3	49.2	-	105.1	7.1	83.2	73.9	64.7	55.5	46.3	-
	62	101.7	6.5	101.7	92.9	81.4	72.2	63.1	54.0	94.8	7.0	94.8	90.4	77.3	68.1	58.8	49.6
2550	77	139.2	6.5	65.9	55.4	44.9	-	-	-	130.4	7.2	62.0	51.3	40.6	-	-	-
	72	127.8	6.5	80.2	69.7	59.1	48.6	-	-	119.3	7.2	76.8	66.1	55.5	44.8	-	-
	67	116.3	6.5	94.4	83.9	73.4	62.9	52.4	-	108.1	7.1	91.6	80.9	70.3	59.6	48.9	-
	62	105.1	6.5	105.1	99.3	88.5	78.0	67.5	57.0	97.5	7.0	97.5	94.6	83.9	73.3	62.6	51.9
	57	102.6	6.5	102.6	102.6	92.7	82.2	71.7	61.2	96.2	7.1	96.2	96.2	86.7	76.0	65.4	54.7
2975	77	143.8	6.5	72.0	60.4	48.5	-	-	-	134.1	7.3	68.1	56.0	43.8	-	-	-
	72	131.9	6.5	87.8	75.8	63.9	52.0	-	-	122.6	7.2	84.1	72.0	59.8	47.7	-	-
	67	120.1	6.5	103.5	91.3	79.4	67.4	55.5	-	111.1	7.2	100.1	88.0	75.8	63.7	51.6	-
	62	108.6	6.5	108.6	105.6	95.7	83.8	71.9	60.0	100.3	7.1	100.3	98.8	90.6	78.5	66.4	54.3
	57	106.0	6.5	106.0	106.0	100.3	88.3	76.4	64.5	98.9	7.1	98.9	98.9	93.6	81.5	69.3	57.2
3400	77	148.4	6.5	78.1	65.5	52.2	-	-	-	137.7	7.3	74.2	60.6	47.1	-	-	-
	72	136.1	6.5	95.4	82.0	68.7	55.4	-	-	126.0	7.2	91.4	77.8	64.2	50.7	-	-
	67	123.9	6.5	112.6	98.6	85.3	72.0	58.7	-	114.2	7.2	108.5	95.0	81.4	67.8	54.3	-
	62	112.0	6.5	112.0	112.0	102.9	89.6	76.3	63.0	103.0	7.1	103.0	103.0	97.2	83.7	70.1	56.6
	57	109.4	6.4	109.4	109.4	107.8	94.5	81.1	67.8	101.6	7.1	101.6	101.6	100.4	86.9	73.3	59.8
3825	72	138.3	6.5	103.1	88.4	73.8	59.1	-	-	128.1	7.2	98.2	83.4	68.6	53.8	-	-
	67	125.8	6.5	120.2	106.3	91.6	76.9	62.3	-	116.2	7.1	113.3	101.7	87.0	72.2	57.4	-
	62	113.8	6.4	113.8	113.8	109.2	94.6	79.9	65.3	104.8	7.1	104.8	104.8	101.9	87.1	72.3	57.5
	57	111.1	6.4	111.1	111.1	110.3	95.6	81.0	66.3	103.3	7.1	103.3	103.3	102.8	88.0	73.2	58.4
4250	72	140.4	6.5	110.8	94.8	78.8	62.8	-	-	130.3	7.2	105.1	89.0	73.0	57.0	-	-
	67	127.8	6.4	127.8	113.9	97.9	81.9	65.9	-	118.1	7.1	118.1	108.5	92.5	76.5	60.4	-
	62	115.5	6.4	115.5	115.5	115.5	99.5	83.6	67.6	106.6	7.0	106.6	106.6	106.6	90.6	74.5	58.5
	57	112.8	6.4	112.8	112.8	112.8	96.8	80.8	64.8	105.1	7.1	105.1	105.1	105.1	89.0	73.0	57.0
		95°F								**105°F**							
2125	77	118.9	7.9	51.9	42.9	33.6	-	-	-	111.0	8.6	44.5	39.1	30.0	-	-	-
	72	108.3	7.8	66.5	57.1	47.8	38.4	-	-	100.3	8.5	62.0	53.0	43.9	34.8	-	-
	67	97.7	7.7	81.0	71.3	62.0	52.6	43.3	-	89.7	8.3	79.6	66.9	57.8	48.7	39.7	-
	62	87.9	7.6	87.9	87.9	73.2	63.9	54.6	45.2	83.0	8.2	83.0	83.0	67.7	58.6	49.6	40.5
2550	77	121.6	8.0	58.0	47.2	36.4	-	-	-	112.6	8.7	54.1	43.4	32.6	-	-	-
	72	110.8	7.9	73.4	62.6	51.8	40.9	-	-	101.8	8.5	69.2	58.5	47.8	37.1	-	-
	67	99.9	7.7	88.8	78.0	67.2	56.3	45.5	-	91.0	8.3	84.3	73.6	62.9	52.2	41.5	-
	62	90.0	7.6	90.0	90.0	79.3	68.5	57.7	46.9	84.3	8.2	84.3	84.3	73.7	63.0	52.3	41.6
	57	89.7	7.7	89.7	89.7	80.7	69.9	59.0	48.2	84.6	8.3	84.6	83.6	73.8	63.1	52.4	41.7
2975	77	124.4	8.0	64.1	51.5	39.2	-	-	-	114.3	8.7	63.6	47.6	35.3	-	-	-
	72	113.3	7.9	80.4	68.1	55.8	43.4	-	-	103.3	8.6	76.3	64.0	51.6	39.3	-	-
	67	102.2	7.8	96.6	84.6	72.3	60.0	47.7	-	92.4	8.4	89.0	80.3	68.0	55.7	43.3	-
	62	92.0	7.6	92.0	92.0	85.5	73.1	60.8	48.5	85.5	8.2	85.5	85.5	79.6	67.3	55.0	42.6
	57	91.7	7.7	91.7	91.7	86.9	74.6	62.3	50.0	85.8	8.3	85.8	85.4	79.8	67.5	55.1	42.8
3400	77	127.1	8.0	70.2	55.8	42.0	-	-	-	116.0	8.8	73.2	51.9	37.9	-	-	-
	72	115.8	7.9	87.3	73.5	59.7	45.9	-	-	104.9	8.6	83.5	69.5	55.5	41.5	-	-
	67	104.5	7.8	104.5	91.3	77.5	63.7	49.9	-	93.8	8.4	93.8	87.1	73.1	59.1	45.1	-
	62	94.0	7.7	94.0	94.0	91.6	77.8	64.0	50.2	86.8	8.3	86.8	86.8	85.6	71.6	57.7	43.7
	57	93.8	7.7	93.8	93.8	93.1	79.3	65.5	51.7	87.1	8.3	87.1	87.1	85.8	71.8	57.8	43.9
3825	72	118.0	7.9	93.3	78.4	63.4	48.5	-	-	107.1	8.6	89.5	74.3	59.2	44.0	-	-
	67	106.5	7.8	106.5	97.2	82.3	67.4	52.4	-	95.7	8.4	95.7	91.1	77.9	62.8	47.6	-
	62	95.8	7.7	95.8	95.8	94.6	79.7	64.7	49.8	88.6	8.3	88.6	88.6	88.0	72.9	57.7	42.5
	57	95.6	7.7	95.6	95.6	95.2	80.3	65.4	50.4	88.9	8.4	88.9	88.9	88.3	73.1	58.0	42.8
4250	72	120.2	7.9	99.3	83.2	67.1	51.1	-	-	109.3	8.6	95.5	79.2	62.8	46.5	-	-
	67	108.5	7.8	108.5	103.2	87.1	71.0	54.9	-	97.7	8.5	97.7	95.1	82.7	66.4	50.1	-
	62	97.6	7.7	97.6	97.6	97.6	81.6	65.5	49.4	90.4	8.3	90.4	90.4	90.4	74.1	57.8	41.4
	57	97.4	7.7	97.4	97.4	97.4	81.3	65.2	49.1	90.8	8.4	90.8	90.8	90.8	74.4	58.1	41.8

ZF102 (8.5 Ton) (Continued)

Air on Evaporator Coil		Temperature of Air on Condenser Coil															
		Total Capacity[1] (MBh)	Total Input (kW)[2]	Sensible Capacity (MBh) Return Dry Bulb (°F)						Total Capacity[1] (MBh)	Total Input (kW)[2]	Sensible Capacity (MBh) Return Dry Bulb (°F)					
CFM	WB (°F)			90	85	80	75	70	65			90	85	80	75	70	65
		115°F								**125°F**							
2125	77	103.0	9.4	37.0	35.2	26.4	-	-	-	95.1	10.1	32.7	28.3	22.9	-	-	-
	72	92.4	9.1	57.6	48.8	40.0	31.2	-	-	84.4	9.8	53.2	44.7	36.2	27.6	-	-
	67	81.7	8.9	78.2	62.4	53.6	44.8	36.0	-	73.7	9.5	73.7	58.0	49.4	40.9	32.4	-
	62	78.2	8.8	78.2	78.1	62.2	53.4	44.6	35.8	73.3	9.4	73.3	73.2	56.6	48.1	39.6	31.1
2550	77	103.6	9.4	50.1	39.5	28.9	-	-	-	94.6	10.2	48.2	35.6	25.2	-	-	-
	72	92.9	9.2	64.9	54.4	43.8	33.2	-	-	83.9	9.8	60.7	50.2	39.8	29.3	-	-
	67	82.1	8.9	79.8	69.2	58.7	48.1	37.5	-	73.3	9.5	73.3	64.9	54.4	43.9	33.5	-
	62	78.6	8.8	78.6	78.6	68.0	57.4	46.8	36.3	72.9	9.4	72.9	72.9	62.3	51.9	41.4	31.0
	57	79.5	8.9	79.5	77.6	67.0	56.4	45.8	35.3	74.4	9.5	74.4	71.5	60.2	49.7	39.2	28.8
2975	77	104.2	9.5	63.1	43.8	31.4	-	-	-	94.1	10.2	63.6	43.0	27.5	-	-	-
	72	93.4	9.2	72.3	59.9	47.5	35.2	-	-	83.5	9.9	68.2	55.8	43.4	31.0	-	-
	67	82.6	9.0	81.4	76.0	63.7	51.3	38.9	-	72.8	9.6	72.8	71.8	59.4	47.0	34.6	-
	62	79.1	8.9	79.1	79.0	73.8	61.5	49.1	36.7	72.6	9.5	72.6	72.6	68.0	55.6	43.2	30.8
	57	80.0	8.9	80.0	79.0	72.7	60.4	48.0	35.6	74.1	9.5	74.1	72.6	65.7	53.3	40.9	28.5
3400	77	104.8	9.5	76.1	48.0	33.9	-	-	-	93.6	10.3	79.1	50.4	29.8	-	-	-
	72	93.9	9.3	79.6	65.5	51.3	37.1	-	-	83.0	10.0	75.8	61.4	47.1	32.7	-	-
	67	83.1	9.0	83.1	82.9	68.7	54.5	40.4	-	72.4	9.6	72.4	72.4	64.3	50.0	35.6	-
	62	79.5	8.9	79.5	79.5	79.7	65.5	51.3	37.2	72.2	9.5	72.2	72.2	72.2	59.4	45.0	30.7
	57	80.4	9.0	80.4	80.4	78.5	64.3	50.2	36.0	73.7	9.6	73.7	73.7	71.2	56.8	42.5	28.1
3825	72	96.1	9.3	85.7	70.3	54.9	39.5	-	-	85.2	10.0	81.8	66.2	50.6	35.0	-	-
	67	85.0	9.1	85.0	84.9	73.5	58.2	42.8	-	74.3	9.7	74.3	74.3	69.2	53.6	38.0	-
	62	81.4	8.9	81.4	81.4	81.4	66.1	50.7	35.3	74.1	9.6	74.1	74.1	74.1	59.3	43.7	28.1
	57	82.3	9.0	82.3	82.3	81.3	66.0	50.6	35.2	75.7	9.6	75.7	75.7	74.4	58.8	43.2	27.6
4250	72	98.3	9.3	91.7	75.1	58.5	41.9	-	-	87.4	10.0	87.4	71.0	54.2	37.3	-	-
	67	87.0	9.1	87.0	87.0	78.4	61.8	45.2	-	76.2	9.7	76.2	76.2	74.0	57.1	40.3	-
	62	83.2	9.0	83.2	83.2	83.2	66.6	50.0	33.4	76.0	9.6	76.0	76.0	76.0	59.2	42.3	25.5
	57	84.2	9.0	84.2	84.2	84.2	67.6	51.0	34.4	77.6	9.6	77.6	77.6	77.6	60.7	43.9	27.0

1. These capacities are gross ratings. For net capacity, deduct air blower motor, MBh = 3.415 x kW. Refer to the appropriate Blower Performance Table for the kW of the supply air blower motor.
2. These ratings include the condenser fan motors (total 1 kW) and the compressor motors but not the supply air blower motor.

ZF120 (10 Ton)

Air on Evaporator Coil		Temperature of Air on Condenser Coil															
		Total Capacity[1] (MBh)	Total Input (kW)[2]	Sensible Capacity (MBh)						Total Capacity[1] (MBh)	Total Input (kW)[2]	Sensible Capacity (MBh)					
CFM	WB (°F)			Return Dry Bulb (°F)								Return Dry Bulb (°F)					
				90	85	80	75	70	65			90	85	80	75	70	65
		75°F								**85°F**							
2500	77	165.2	7.4	67.4	56.3	45.3	-	-	-	153.8	8.3	62.7	51.8	40.9	-	-	-
	72	149.2	7.5	84.0	72.9	61.8	50.8	-	-	138.9	8.3	79.2	68.3	57.4	46.5	-	-
	67	133.2	7.5	100.5	89.4	78.4	67.3	56.3	-	124.0	8.2	95.7	84.8	73.9	63.0	52.1	-
	62	121.8	7.5	121.8	105.9	93.0	82.0	70.9	59.8	112.8	8.2	112.8	103.2	88.0	77.1	66.2	55.3
3000	77	170.9	7.4	76.4	63.0	49.7	-	-	-	159.0	8.3	71.2	58.2	45.2	-	-	-
	72	154.3	7.4	94.5	81.2	67.8	54.5	-	-	143.5	8.3	89.4	76.4	63.4	50.4	-	-
	67	137.7	7.4	112.6	99.3	86.0	72.7	59.3	-	128.1	8.2	107.6	94.6	81.6	68.5	55.5	-
	62	125.9	7.5	125.9	115.4	102.0	88.7	75.4	62.1	116.5	8.2	116.5	110.1	97.1	84.1	71.1	58.0
	57	120.2	7.4	120.2	120.2	109.7	96.3	83.0	69.7	112.6	8.2	112.6	112.6	101.9	88.9	75.8	62.8
3500	77	176.6	7.4	85.3	69.7	54.1	-	-	-	164.1	8.3	79.7	64.6	49.4	-	-	-
	72	159.4	7.4	105.0	89.5	73.9	58.3	-	-	148.2	8.3	99.6	84.5	69.3	54.2	-	-
	67	142.3	7.4	124.8	109.2	93.6	78.0	62.4	-	132.3	8.2	119.5	104.3	89.2	74.1	58.9	-
	62	130.1	7.5	130.1	124.8	111.1	95.5	79.9	64.3	120.3	8.2	120.3	117.1	106.2	91.1	75.9	60.8
	57	124.2	7.4	124.2	124.2	119.4	103.8	88.2	72.6	116.3	8.2	116.3	116.3	111.4	96.3	81.1	66.0
4000	77	182.2	7.3	94.3	76.4	58.6	-	-	-	169.2	8.3	88.2	70.9	53.7	-	-	-
	72	164.5	7.4	115.6	97.7	79.9	62.0	-	-	152.8	8.3	109.8	92.5	75.3	58.0	-	-
	67	146.8	7.4	136.9	119.1	101.2	83.3	65.5	-	136.4	8.2	131.4	114.1	96.9	79.6	62.3	-
	62	134.3	7.4	134.3	134.3	120.1	102.2	84.4	66.5	124.1	8.2	124.1	124.1	115.3	98.0	80.8	63.5
	57	128.2	7.4	128.2	128.2	129.1	111.3	93.4	75.5	119.9	8.2	119.9	119.9	121.0	103.7	86.4	69.2
4500	72	168.0	7.4	124.0	104.8	85.6	66.4	-	-	155.6	8.3	117.7	99.1	80.5	61.8	-	-
	67	149.9	7.4	144.9	127.7	108.5	89.2	70.0	-	138.9	8.3	136.4	122.2	103.5	84.9	66.3	-
	62	137.1	7.4	137.1	137.1	130.0	110.8	91.5	72.3	126.3	8.2	126.3	126.3	122.0	103.3	84.7	66.0
	57	130.9	7.4	130.9	130.9	131.3	112.1	92.9	73.7	122.1	8.2	122.1	122.1	122.6	104.0	85.4	66.7
5000	72	171.4	7.4	132.5	111.9	91.3	70.7	-	-	158.4	8.3	125.7	105.7	85.7	65.6	-	-
	67	153.0	7.4	153.0	136.3	115.7	95.1	74.5	-	141.4	8.3	141.4	130.2	110.2	90.2	70.2	-
	62	139.9	7.5	139.9	139.9	139.9	119.3	98.7	78.1	128.6	8.2	128.6	128.6	128.6	108.6	88.6	68.6
	57	133.5	7.4	133.5	133.5	133.5	113.0	92.4	71.8	124.3	8.2	124.3	124.3	124.3	104.3	84.3	64.2
		95°F								**105°F**							
2500	77	142.4	9.2	58.1	47.3	36.6	-	-	-	129.8	10.2	56.2	45.6	34.9	-	-	-
	72	128.6	9.1	74.5	63.7	53.0	42.3	-	-	117.4	9.9	74.6	63.8	53.1	42.4	-	-
	67	114.8	9.0	90.9	80.2	69.4	58.7	48.0	-	104.9	9.7	93.0	82.1	71.4	60.6	49.9	-
	62	103.8	8.8	103.8	100.4	83.0	72.3	61.5	50.8	94.6	9.5	94.6	92.9	82.3	71.6	60.8	50.1
3000	77	147.0	9.2	66.1	53.4	40.7	-	-	-	133.5	10.2	65.1	50.3	37.6	-	-	-
	72	132.8	9.1	84.3	71.6	58.9	46.2	-	-	120.8	10.0	82.5	69.8	57.1	44.5	-	-
	67	118.6	9.0	102.5	89.8	77.1	64.4	51.7	-	108.0	9.8	100.0	89.4	76.7	64.0	51.3	-
	62	107.1	8.9	107.1	104.9	92.2	79.5	66.7	54.0	97.3	9.5	97.3	96.2	89.9	77.2	64.5	51.8
	57	105.0	8.9	105.0	105.0	94.1	81.4	68.7	56.0	97.9	9.6	97.9	97.9	91.0	78.3	65.6	52.9
3500	77	151.6	9.3	74.1	59.4	44.7	-	-	-	137.3	10.3	74.0	54.9	40.3	-	-	-
	72	137.0	9.2	94.2	79.5	64.8	50.1	-	-	124.1	10.1	90.5	75.8	61.2	46.5	-	-
	67	122.3	9.1	114.2	99.5	84.8	70.1	55.4	-	111.0	9.8	106.9	96.7	82.0	67.4	52.7	-
	62	110.5	8.9	110.5	109.4	101.4	86.7	72.0	57.3	100.1	9.6	100.1	99.5	97.4	82.8	68.1	53.5
	57	108.3	8.9	108.3	108.3	103.5	88.8	74.1	59.4	100.6	9.7	100.6	100.6	97.4	82.7	68.1	53.4
4000	77	156.2	9.3	82.1	65.4	48.8	-	-	-	141.0	10.4	82.9	59.6	43.0	-	-	-
	72	141.1	9.2	104.0	87.3	70.6	54.0	-	-	127.5	10.1	98.4	81.8	65.2	48.6	-	-
	67	126.0	9.1	125.9	109.2	92.5	75.8	59.1	-	114.0	9.9	113.9	104.0	87.4	70.8	54.2	-
	62	113.9	8.9	113.9	113.9	110.5	93.9	77.2	60.5	102.8	9.7	102.8	102.8	105.0	88.4	71.8	55.2
	57	111.6	8.9	111.6	111.6	112.9	96.2	79.5	62.8	103.4	9.7	103.4	103.4	103.8	87.2	70.6	54.0
4500	72	143.3	9.2	111.4	93.4	75.3	57.2	-	-	129.6	10.2	105.3	87.4	69.5	51.5	-	-
	67	127.9	9.1	127.9	116.7	98.6	80.6	62.5	-	115.9	9.9	115.8	109.5	93.1	75.2	57.2	-
	62	115.6	9.0	115.6	115.6	114.0	95.9	77.8	59.7	104.5	9.7	104.5	104.5	105.6	87.6	69.7	51.8
	57	113.3	9.0	113.3	113.3	114.0	95.9	77.8	59.7	105.1	9.7	105.1	105.1	105.3	87.4	69.4	51.5
5000	72	145.5	9.2	118.9	99.4	80.0	60.5	-	-	131.7	10.2	112.2	93.0	73.7	54.5	-	-
	67	129.9	9.1	129.9	124.2	104.8	85.3	65.8	-	117.7	9.9	117.7	114.9	98.8	79.5	60.3	-
	62	117.4	9.0	117.4	117.4	117.4	97.9	78.4	59.0	106.2	9.7	106.2	106.2	106.2	86.9	67.6	48.4
	57	115.1	9.0	115.1	115.1	115.1	95.6	76.1	56.7	106.8	9.8	106.8	106.8	106.8	87.5	68.3	49.0

ZF120 (10 Ton) (Continued)

Air on Evaporator Coil		Temperature of Air on Condenser Coil															
		Total Capacity[1] (MBh)	Total Input (kW)[2]	Sensible Capacity (MBh) Return Dry Bulb (°F)						Total Capacity[1] (MBh)	Total Input (kW)[2]	Sensible Capacity (MBh) Return Dry Bulb (°F)					
CFM	WB (°F)			90	85	80	75	70	65			90	85	80	75	70	65
		115°F								**125°F**							
2500	77	117.2	11.2	54.3	43.9	33.2	-	-	-	104.6	12.1	64.4	42.9	31.5	-	-	-
	72	106.1	10.8	74.7	63.9	53.2	42.5	-	-	94.9	11.6	74.8	64.0	53.3	42.6	-	-
	67	95.0	10.4	95.0	84.0	73.3	62.6	51.8	-	85.2	11.1	85.2	85.2	75.2	64.5	53.8	-
	62	85.5	10.1	85.5	85.5	81.6	70.9	60.1	49.4	76.3	10.8	76.3	76.3	76.3	70.2	59.4	48.7
3000	77	120.1	11.2	64.1	47.2	34.5	-	-	-	106.6	12.3	71.1	45.8	31.5	-	-	-
	72	108.7	10.9	80.7	68.1	55.4	42.7	-	-	96.7	11.7	78.9	66.3	53.7	41.0	-	-
	67	97.4	10.5	97.4	88.9	76.3	63.6	51.0	-	86.8	11.2	86.8	86.8	75.9	63.2	50.6	-
	62	87.5	10.2	87.5	87.5	87.5	74.9	62.2	49.6	77.7	10.9	77.7	77.7	77.7	72.6	60.0	47.3
	57	90.8	10.3	90.8	90.8	87.8	75.2	62.5	49.8	83.7	11.0	83.7	83.7	83.7	72.1	59.4	46.8
3500	77	122.9	11.3	73.9	50.5	35.9	-	-	-	108.6	12.4	77.9	48.7	31.5	-	-	-
	72	111.3	10.9	86.8	72.2	57.6	43.0	-	-	98.5	11.8	83.1	68.6	54.0	39.4	-	-
	67	99.7	10.6	99.7	93.9	79.3	64.7	50.1	-	88.4	11.3	88.4	88.4	76.5	62.0	47.4	-
	62	89.6	10.3	89.6	89.6	93.5	78.9	64.3	49.7	79.2	11.0	79.2	79.2	79.2	75.0	60.5	45.9
	57	93.0	10.4	93.0	93.0	91.3	76.7	62.1	47.5	85.3	11.1	85.3	85.3	85.2	70.6	56.1	41.5
4000	77	125.8	11.4	83.7	53.8	37.2	-	-	-	110.6	12.5	84.6	51.6	31.5	-	-	-
	72	113.9	11.0	92.9	76.3	59.8	43.2	-	-	100.3	11.9	87.3	70.8	54.3	37.8	-	-
	67	102.0	10.6	102.0	98.8	82.3	65.7	49.2	-	90.0	11.4	90.0	90.0	77.2	60.7	44.2	-
	62	91.7	10.4	91.7	91.7	99.5	82.9	66.4	49.8	80.6	11.1	80.6	80.6	80.6	77.4	61.0	44.5
	57	95.1	10.5	95.1	95.1	94.7	78.2	61.6	45.1	86.9	11.2	86.9	86.9	85.7	69.2	52.7	36.2
4500	72	115.9	11.1	99.2	81.4	63.6	45.8	-	-	102.2	12.0	93.1	75.4	57.7	40.1	-	-
	67	103.8	10.7	103.8	102.2	87.6	69.8	52.0	-	91.7	11.5	91.7	91.7	82.0	64.4	46.7	-
	62	93.3	10.4	93.3	93.3	97.2	79.4	61.6	43.8	82.2	11.1	82.2	82.2	82.2	71.2	53.5	35.8
	57	96.8	10.5	96.8	96.8	96.6	78.8	61.0	43.2	88.5	11.3	88.5	88.5	87.9	70.3	52.6	34.9
5000	72	117.9	11.1	105.5	86.5	67.4	48.4	-	-	104.2	12.1	98.9	80.0	61.2	42.3	-	-
	67	105.6	10.7	105.6	105.6	92.8	73.8	54.7	-	93.5	11.5	93.5	93.5	86.9	68.0	49.2	-
	62	95.0	10.5	95.0	95.0	95.0	75.9	56.8	37.8	83.7	11.2	83.7	83.7	83.7	64.9	46.0	27.2
	57	98.5	10.6	98.5	98.5	98.5	79.4	60.4	41.3	90.2	11.3	90.2	90.2	90.2	71.4	52.5	33.7

1. These capacities are gross ratings. For net capacity, deduct air blower motor, MBh = 3.415 x kW. Refer to the appropriate Blower Performance Table for the kW of the supply air blower motor.
2. These ratings include the condenser fan motors (total 1 kW) and the compressor motors but not the supply air blower motor.

ZF150 (12.5 Ton)

Air on Evaporator Coil		Temperature of Air on Condenser Coil															
		Total Capacity[1] (MBh)	Total Input (kW)[2]	Sensible Capacity (MBh)						Total Capacity[1] (MBh)	Total Input (kW)[2]	Sensible Capacity (MBh)					
CFM	WB (°F)			Return Dry Bulb (°F)								Return Dry Bulb (°F)					
				90	85	80	75	70	65			90	85	80	75	70	65
		75°F								**85°F**							
3125	77	192.8	10.1	75.6	62.8	49.9	-	-	-	185.3	11.1	73.4	60.7	48.0	-	-	-
	72	179.7	9.8	99.3	86.4	73.5	60.6	-	-	171.3	10.9	96.2	83.5	70.8	58.1	-	-
	67	166.6	9.6	122.9	110.0	97.1	84.3	71.4	-	157.2	10.7	119.1	106.4	93.6	80.9	68.2	-
	62	150.6	9.5	150.6	133.0	119.1	106.2	93.3	80.4	142.2	10.6	142.2	132.0	115.5	102.8	90.1	77.4
3750	77	200.7	10.1	83.8	69.2	54.6	-	-	-	192.2	11.1	81.3	66.8	52.4	-	-	-
	72	187.1	9.9	109.7	95.1	80.5	66.0	-	-	177.6	10.9	106.2	91.8	77.4	63.0	-	-
	67	173.4	9.6	135.6	121.0	106.5	91.9	77.3	-	163.0	10.8	131.2	116.8	102.4	88.0	73.5	-
	62	156.8	9.5	156.8	145.1	130.5	115.9	101.3	86.7	147.5	10.6	147.5	140.7	126.3	111.9	97.4	83.0
	57	152.3	9.5	152.3	152.3	138.3	123.7	109.1	94.5	144.4	10.6	144.4	144.4	132.5	118.1	103.7	89.3
4375	77	208.7	10.1	92.0	75.7	59.4	-	-	-	199.1	11.2	89.2	73.0	56.9	-	-	-
	72	194.5	9.9	120.2	103.9	87.6	71.3	-	-	184.0	11.0	116.3	100.1	84.0	67.9	-	-
	67	180.2	9.7	148.3	132.1	115.8	99.5	83.2	-	168.9	10.8	143.4	127.2	111.1	95.0	78.8	-
	62	163.0	9.6	163.0	157.1	141.9	125.6	109.3	93.0	152.8	10.7	152.8	149.4	137.0	120.9	104.8	88.6
	57	158.3	9.5	158.3	158.3	150.4	134.1	117.8	101.5	149.5	10.6	149.5	149.5	143.9	127.7	111.6	95.4
5000	77	216.6	10.1	100.2	82.2	64.2	-	-	-	206.0	11.2	97.1	79.2	61.4	-	-	-
	72	201.8	9.9	130.6	112.6	94.6	76.7	-	-	190.3	11.0	126.3	108.5	90.6	72.8	-	-
	67	187.1	9.7	161.1	143.1	125.1	107.1	89.1	-	174.7	10.8	155.5	137.7	119.8	102.0	84.1	-
	62	169.2	9.6	169.2	169.2	153.3	135.3	117.3	99.3	158.1	10.7	158.1	158.1	147.8	130.0	112.1	94.3
	57	164.3	9.6	164.3	164.3	162.5	144.5	126.5	108.5	154.7	10.7	154.7	154.7	155.2	137.3	119.5	101.6
5625	72	203.6	9.9	138.4	119.4	100.5	81.5	-	-	193.2	11.1	134.4	115.4	96.4	77.5	-	-
	67	188.7	9.7	171.4	151.7	132.8	113.8	94.8	-	177.3	10.9	165.5	146.5	127.6	108.6	89.6	-
	62	170.7	9.6	170.7	170.7	162.7	143.8	124.8	105.8	160.4	10.8	160.4	160.4	155.3	136.3	117.3	98.3
	57	165.7	9.6	165.7	165.7	164.8	145.8	126.9	107.9	157.0	10.7	157.0	157.0	157.2	138.2	119.2	100.3
6250	72	205.4	10.0	146.2	126.2	106.3	86.3	-	-	196.0	11.1	142.5	122.4	102.3	82.1	-	-
	67	190.4	9.8	181.6	160.4	140.4	120.5	100.5	-	179.9	10.9	175.5	155.4	135.3	115.1	95.0	-
	62	172.2	9.7	172.2	172.2	172.2	152.2	132.2	112.3	162.8	10.8	162.8	162.8	162.8	142.7	122.5	102.4
	57	167.2	9.7	167.2	167.2	167.2	147.2	127.2	107.3	159.3	10.8	159.3	159.3	159.3	139.2	119.0	98.9
		95°F								**105°F**							
3125	77	177.9	12.1	71.1	58.6	46.0	-	-	-	165.4	13.5	65.9	53.7	41.2	-	-	-
	72	162.8	12.0	93.2	80.6	68.1	55.6	-	-	151.1	13.4	88.4	75.9	63.4	51.0	-	-
	67	147.8	11.8	115.2	102.7	90.1	77.6	65.1	-	136.8	13.3	111.0	98.2	85.7	73.2	60.7	-
	62	133.8	11.7	133.8	131.0	111.9	99.4	86.9	74.3	125.4	13.1	125.4	124.0	106.1	93.6	81.1	68.6
3750	77	183.7	12.2	78.7	64.5	50.2	-	-	-	170.9	13.5	73.4	59.2	45.1	-	-	-
	72	168.2	12.0	102.8	88.5	74.3	60.0	-	-	156.1	13.4	97.7	83.6	69.4	55.3	-	-
	67	152.6	11.9	126.8	112.6	98.3	84.0	69.8	-	141.4	13.3	122.1	107.9	93.8	79.6	65.5	-
	62	138.2	11.7	138.2	136.3	122.1	107.8	93.5	79.3	129.6	13.1	129.6	128.7	116.1	102.0	87.8	73.7
	57	136.4	11.7	136.4	136.4	126.8	112.5	98.3	84.0	127.8	13.1	127.8	127.8	118.7	104.6	90.4	76.3
4375	77	189.6	12.2	86.3	70.3	54.4	-	-	-	176.4	13.6	80.9	64.8	49.0	-	-	-
	72	173.5	12.1	112.4	96.4	80.4	64.4	-	-	161.2	13.5	107.0	91.2	75.4	59.6	-	-
	67	157.5	11.9	138.4	122.4	106.5	90.5	74.5	-	145.9	13.3	133.2	117.7	101.9	86.1	70.3	-
	62	142.6	11.8	142.6	141.7	132.2	116.2	100.2	84.2	133.8	13.2	133.8	133.3	126.2	110.4	94.6	78.8
	57	140.7	11.8	140.7	140.7	137.3	121.3	105.4	89.4	131.9	13.2	131.9	131.9	129.0	113.2	97.4	81.6
5000	77	195.4	12.3	93.9	76.2	58.5	-	-	-	181.9	13.6	88.4	70.3	52.9	-	-	-
	72	178.9	12.1	122.0	104.3	86.6	68.9	-	-	166.2	13.5	116.3	98.9	81.4	64.0	-	-
	67	162.3	12.0	150.0	132.3	114.6	96.9	79.2	-	150.5	13.4	144.3	127.5	110.0	92.5	75.1	-
	62	147.0	11.8	147.0	147.0	142.3	124.6	106.9	89.2	138.0	13.2	138.0	138.0	136.2	118.7	101.3	83.8
	57	145.1	11.8	145.1	145.1	147.8	130.1	112.4	94.7	136.0	13.2	136.0	136.0	139.2	121.8	104.3	86.9
5625	72	182.7	12.2	130.4	111.4	92.4	73.4	-	-	169.5	13.5	124.3	105.6	86.9	68.2	-	-
	67	165.9	12.0	159.7	141.3	122.3	103.4	84.4	-	153.5	13.4	150.4	136.1	117.4	98.7	80.0	-
	62	150.2	11.9	150.2	150.2	147.9	128.9	109.9	90.9	140.7	13.2	140.7	140.7	139.8	121.1	102.4	83.7
	57	148.2	11.8	148.2	148.2	149.6	130.6	111.6	92.6	138.7	13.2	138.7	138.7	140.3	121.6	102.9	84.2
6250	72	186.6	12.2	138.8	118.5	98.3	78.0	-	-	172.8	13.5	132.3	112.4	92.4	72.5	-	-
	67	169.4	12.0	169.4	150.4	130.1	109.8	89.5	-	156.5	13.4	156.5	144.8	124.8	104.9	84.9	-
	62	153.4	11.9	153.4	153.4	153.4	133.1	112.8	92.5	143.4	13.2	143.4	143.4	143.4	123.5	103.5	83.6
	57	151.4	11.9	151.4	151.4	151.4	131.1	110.8	90.5	141.4	13.2	141.4	141.4	141.4	121.4	101.5	81.5

ZF150 (12.5 Ton) (Continued)

Air on Evaporator Coil		Temperature of Air on Condenser Coil															
		Total Capacity[1] (MBh)	Total Input (kW)[2]	Sensible Capacity (MBh) Return Dry Bulb (°F)						Total Capacity[1] (MBh)	Total Input (kW)[2]	Sensible Capacity (MBh) Return Dry Bulb (°F)					
CFM	WB (°F)			90	85	80	75	70	65			90	85	80	75	70	65
		115°F								**125°F**							
3125	77	152.8	14.9	60.7	48.8	36.4	-	-	-	140.3	16.2	52.4	44.0	31.5	-	-	-
	72	139.4	14.8	83.7	71.3	58.8	46.3	-	-	127.6	16.2	79.0	66.6	54.2	41.7	-	-
	67	125.9	14.7	106.7	93.7	81.2	68.8	56.3	-	114.9	16.1	102.4	89.2	76.8	64.4	51.9	-
	62	117.0	14.5	117.0	117.0	100.3	87.8	75.4	62.9	108.6	15.9	108.6	108.6	94.4	82.0	69.6	57.2
3750	77	158.0	14.9	68.1	54.0	40.0	-	-	-	145.1	16.3	62.7	48.8	34.9	-	-	-
	72	144.1	14.8	92.7	78.7	64.6	50.6	-	-	132.0	16.2	87.7	73.8	59.8	45.9	-	-
	67	130.1	14.7	117.4	103.3	89.3	75.2	61.2	-	118.9	16.1	112.6	98.7	84.8	70.8	56.9	-
	62	121.0	14.5	121.0	121.0	110.2	96.2	82.1	68.1	112.4	15.9	112.4	112.4	104.3	90.3	76.4	62.5
	57	119.1	14.6	119.1	119.1	110.7	96.6	82.6	68.5	110.5	16.0	110.5	110.5	102.6	88.6	74.7	60.8
4375	77	163.2	14.9	75.4	59.2	43.6	-	-	-	150.0	16.3	73.0	53.7	38.2	-	-	-
	72	148.8	14.8	101.7	86.1	70.5	54.8	-	-	136.4	16.2	96.4	80.9	65.5	50.0	-	-
	67	134.4	14.7	128.0	113.0	97.3	81.7	66.1	-	122.9	16.1	122.8	108.2	92.8	77.3	61.9	-
	62	125.0	14.6	125.0	125.0	120.1	104.5	88.9	73.3	116.1	15.9	116.1	116.1	114.1	98.7	83.2	67.8
	57	123.0	14.6	123.0	123.0	120.6	105.0	89.4	73.8	114.2	16.0	114.2	114.2	112.3	96.8	81.4	66.0
5000	77	168.3	15.0	82.8	64.4	47.2	-	-	-	154.8	16.3	83.3	58.5	41.5	-	-	-
	72	153.5	14.9	110.7	93.5	76.3	59.1	-	-	140.8	16.3	105.1	88.1	71.2	54.2	-	-
	67	138.7	14.8	138.7	122.6	105.4	88.2	71.0	-	126.8	16.2	126.8	117.7	100.8	83.8	66.8	-
	62	128.9	14.6	128.9	128.9	130.1	112.9	95.7	78.4	119.9	16.0	119.9	119.9	119.9	107.0	90.0	73.1
	57	126.9	14.6	126.9	126.9	130.6	113.4	96.2	79.0	117.9	16.0	117.9	117.9	117.9	105.0	88.1	71.1
5625	72	156.2	14.9	118.3	99.9	81.4	63.0	-	-	143.0	16.2	112.2	94.1	75.9	57.8	-	-
	67	141.1	14.8	141.1	130.9	112.5	94.1	75.6	-	128.7	16.2	128.7	125.7	107.6	89.4	71.3	-
	62	131.2	14.6	131.2	131.2	131.8	113.3	94.9	76.5	121.7	16.0	121.7	121.7	121.7	105.6	87.5	69.3
	57	129.2	14.6	129.2	129.2	131.0	112.6	94.2	75.7	119.6	16.0	119.6	119.6	119.6	103.6	85.4	67.3
6250	72	158.9	14.9	125.8	106.2	86.6	66.9	-	-	145.1	16.2	119.4	100.0	80.7	61.4	-	-
	67	143.6	14.8	143.6	139.2	119.6	99.9	80.3	-	130.6	16.2	130.6	130.6	114.3	95.0	75.7	-
	62	133.5	14.6	133.5	133.5	133.5	113.8	94.2	74.6	123.5	16.0	123.5	123.5	123.5	104.2	84.9	65.6
	57	131.4	14.6	131.4	131.4	131.4	111.8	92.1	72.5	121.4	16.0	121.4	121.4	121.4	102.1	82.8	63.5

1. These capacities are gross ratings. For net capacity, deduct air blower motor, MBh = 3.415 x kW. Refer to the appropriate Blower Performance Table for the kW of the supply air blower motor.
2. These ratings include the condenser fan motors (total 1 kW) and the compressor motors but not the supply air blower motor.

Airflow Performance

ZF078-150 Side Duct Application

ZF078 (6.5 Ton) Side Duct

Air Flow (CFM)	Available External Static Pressure - IWG[1]																			
	0.2		0.4		0.6		0.8		1.0		1.2		1.4		1.6		1.8		2.0	
	RPM	BHP	RPM	BHP	RPM	BHP	RPM	BHP	RPM	BHP	RPM	BHP	RPM	BHP	RPM	BHP	RPM	BHP	RPM	BHP
	Field Supplied Drive						Standard 1.5 HP & Drive								Hi Static 2 HP & Drive					
1800	751	0.22	813	0.43	872	0.62	929	0.78	985	0.93	1040	1.07	1095	1.20	1150	1.33	1206	1.46	1265	1.59
2000	776	0.35	838	0.56	897	0.75	954	0.92	1010	1.07	1064	1.20	1119	1.33	1175	1.46	1231	1.59	1289	1.72
2200	804	0.50	866	0.71	925	0.90	982	1.06	1038	1.21	1092	1.35	1147	1.48	1203	1.61	1259	1.73	1317	1.87
2400	835	0.66	897	0.87	956	1.06	1013	1.22	1069	1.37	1124	1.51	1178	1.64	1234	1.77	1290	1.90	1348	2.03
2600	869	0.84	931	1.05	990	1.24	1047	1.40	1103	1.55	1158	1.69	1212	1.82	1268	1.95	1324	2.07	1382	2.21
2800	906	1.03	968	1.25	1027	1.43	1084	1.60	1139	1.75	1194	1.89	1249	2.02	1304	2.14	1361	2.27	-	-
3000	945	1.25	1007	1.46	1066	1.65	1123	1.81	1179	1.96	1234	2.10	1288	2.23	-	-	-	-	-	-
3200	987	1.48	1048	1.69	1107	1.88	1165	2.04	1220	2.19	-	-	-	-	-	-	-	-	-	-
3400	1030	1.73	1092	1.94	1151	2.12	1208	2.29	-	-	-	-	-	-	-	-	-	-	-	-
															2 HP & Field Supplied Drive					

1. Blower performance includes gas heat exchangers and 2” filters. See STATIC RESISTANCE table for additional applications.
2. See RPM SELECTION table to determine desired motor sheave setting and to determine the maximum continuous BHP.
3. kW = BHP x 0.932.

ZF090 (7.5 Ton) Side Duct

Air Flow (CFM)	Available External Static Pressure - IWG[1]																			
	0.2		0.4		0.6		0.8		1.0		1.2		1.4		1.6		1.8		2.0	
	RPM	BHP	RPM	BHP	RPM	BHP	RPM	BHP	RPM	BHP	RPM	BHP	RPM	BHP	RPM	BHP	RPM	BHP	RPM	BHP
	Field Supplied Drive				Standard 1.5 HP & Drive										Hi Static 3 HP & Drive					
2000	776	0.35	838	0.56	897	0.75	954	0.92	1010	1.07	1064	1.20	1119	1.33	1175	1.46	1231	1.59	1289	1.72
2200	804	0.50	866	0.71	925	0.90	982	1.06	1038	1.21	1092	1.35	1147	1.48	1203	1.61	1259	1.73	1317	1.87
2400	835	0.66	897	0.87	956	1.06	1013	1.22	1069	1.37	1124	1.51	1178	1.64	1234	1.77	1290	1.90	1348	2.03
2600	869	0.84	931	1.05	990	1.24	1047	1.40	1103	1.55	1158	1.69	1212	1.82	1268	1.95	1324	2.07	1382	2.21
2800	906	1.03	968	1.25	1027	1.43	1084	1.60	1139	1.75	1194	1.89	1249	2.02	1304	2.14	1361	2.27	1419	2.40
3000	945	1.25	1007	1.46	1066	1.65	1123	1.81	1179	1.96	1234	2.10	1288	2.23	1344	2.36	1400	2.48	1458	2.62
3200	987	1.48	1048	1.69	1107	1.88	1165	2.04	1220	2.19	1275	2.33	1330	2.46	1385	2.59	1442	2.71	1500	2.85
3400	1030	1.73	1092	1.94	1151	2.12	1208	2.29	1264	2.44	1319	2.58	1374	2.71	1429	2.84	1485	2.96	1544	3.10
3600	1076	1.99	1138	2.20	1197	2.39	1254	2.56	1310	2.71	1364	2.84	1419	2.97	1475	3.10	1531	3.23	1589	3.36
3800	1124	2.27	1185	2.48	1245	2.67	1302	2.84	1357	2.99	1412	3.12	1467	3.25	1522	3.38	-	-	-	-
											3 HP & Field Supplied Drive									

1. Blower performance includes gas heat exchangers and 2” filters. See STATIC RESISTANCE table for additional applications.
2. See RPM SELECTION table to determine desired motor sheave setting and to determine the maximum continuous BHP.
3. kW = BHP x 0.932.

ZF102 (8.5 Ton) Side Duct

Air Flow (CFM)	Available External Static Pressure - IWG[1]																			
	0.2		0.4		0.6		0.8		1.0		1.2		1.4		1.6		1.8		2.0	
	RPM	BHP	RPM	BHP	RPM	BHP	RPM	BHP	RPM	BHP	RPM	BHP	RPM	BHP	RPM	BHP	RPM	BHP	RPM	BHP
	Field Supplied Drive				Standard 2 HP & Drive						Hi Static 3 HP & Drive									
2600	628	0.56	678	0.76	730	0.93	781	1.09	833	1.25	883	1.41	933	1.59	980	1.80	1025	2.05	1068	2.35
2800	648	0.67	698	0.87	750	1.04	801	1.20	853	1.36	903	1.52	953	1.70	1000	1.91	1046	2.16	1088	2.46
3000	666	0.80	717	1.00	768	1.17	820	1.33	871	1.49	922	1.65	971	1.83	1019	2.04	1064	2.29	1106	2.59
3200	684	0.95	735	1.15	786	1.32	838	1.48	889	1.63	940	1.80	989	1.98	1037	2.19	1082	2.44	1124	2.74
3400	702	1.11	753	1.31	804	1.48	856	1.64	907	1.79	958	1.96	1007	2.14	1055	2.35	1100	2.60	1142	2.90
3600	721	1.28	772	1.48	824	1.65	875	1.81	927	1.97	977	2.13	1027	2.31	1074	2.52	1119	2.77	-	-
3800	742	1.47	793	1.67	844	1.84	896	2.00	947	2.15	998	2.32	1047	2.50	1095	2.71	1140	2.96	-	-
4000	765	1.67	815	1.86	867	2.04	918	2.19	970	2.35	1020	2.51	1070	2.70	1117	2.91	-	-	-	-
4200	789	1.87	840	2.07	891	2.24	943	2.40	995	2.56	1045	2.72	1094	2.90	-	-	-	-	-	-
															3 HP & Field Supplied Drive					

1. Blower performance includes gas heat exchangers and 2” filters. See STATIC RESISTANCE table for additional applications.
2. See RPM SELECTION table to determine desired motor sheave setting and to determine the maximum continuous BHP.
3. kW = BHP x 0.932.

ZF120 (10 Ton) Side Duct

Air Flow (CFM)	Available External Static Pressure - IWG[1]																			
	0.2		0.4		0.6		0.8		1.0		1.2		1.4		1.6		1.8		2.0	
	RPM	BHP	RPM	BHP	RPM	BHP	RPM	BHP	RPM	BHP	RPM	BHP	RPM	BHP	RPM	BHP	RPM	BHP	RPM	BHP
	Field Supplied Drive				Standard 2 HP & Drive										Hi Static 3 HP & Drive					
2600	675	0.53	726	0.74	776	0.94	824	1.12	870	1.30	914	1.48	957	1.65	1000	1.82	1041	1.99	1082	2.17
2800	686	0.63	738	0.84	787	1.04	835	1.23	881	1.41	925	1.58	969	1.76	1011	1.93	1052	2.10	1093	2.27
3000	699	0.75	750	0.96	800	1.16	847	1.34	893	1.52	938	1.70	981	1.87	1024	2.04	1065	2.21	1106	2.39
3200	713	0.88	764	1.09	814	1.28	861	1.47	907	1.65	952	1.83	995	2.00	1037	2.17	1079	2.34	1119	2.52
3400	728	1.02	779	1.23	829	1.43	877	1.61	923	1.79	967	1.97	1010	2.14	1053	2.31	1094	2.48	1135	2.66
3600	745	1.18	796	1.39	846	1.59	893	1.77	939	1.95	984	2.13	1027	2.30	1069	2.47	1111	2.64	1152	2.82
3800	763	1.36	815	1.57	864	1.76	912	1.95	958	2.13	1002	2.31	1046	2.48	1088	2.65	1129	2.82	1170	3.00
4000	783	1.55	835	1.76	884	1.96	932	2.15	978	2.33	1022	2.50	1066	2.67	1108	2.84	1149	3.02	1190	3.19
4200	805	1.77	856	1.98	906	2.17	953	2.36	999	2.54	1044	2.72	1087	2.89	1129	3.06	1171	3.23	1211	3.41
4400	828	2.00	879	2.21	929	2.41	976	2.59	1022	2.77	1067	2.95	1110	3.12	1152	3.29	-	-	-	-
4600	852	2.25	904	2.46	953	2.66	1001	2.85	1047	3.03	1092	3.20	1135	3.37	-	-	-	-	-	-
4800	879	2.52	930	2.73	980	2.93	1027	3.12	1073	3.30	-	-	-	-	-	-	-	-	-	-
5000	906	2.81	958	3.02	1007	3.22	1055	3.41	-	-	-	-	-	-	-	-	-	-	-	-
											3 HP & Field Supplied Drive									

1. Blower performance includes gas heat exchangers and 2” filters. See STATIC RESISTANCE table for additional applications.
2. See RPM SELECTION table to determine desired motor sheave setting and to determine the maximum continuous BHP.
3. kW = BHP x 0.932.

ZF150 (12.5 Ton) Side Duct

Air Flow (CFM)	Available External Static Pressure - IWG[1]																			
	0.2		0.4		0.6		0.8		1.0		1.2		1.4		1.6		1.8		2.0	
	RPM	BHP	RPM	BHP	RPM	BHP	RPM	BHP	RPM	BHP	RPM	BHP	RPM	BHP	RPM	BHP	RPM	BHP	RPM	BHP
	3 HP & Field Supplied Drive								Standard 3 HP & Drive											
3200	684	1.00	741	1.16	794	1.32	844	1.48	892	1.65	940	1.81	988	1.97	1036	2.12	1087	2.27	1141	2.42
3400	709	1.15	765	1.30	818	1.46	868	1.62	916	1.79	964	1.95	1012	2.11	1061	2.26	1112	2.42	1166	2.56
3600	734	1.30	791	1.46	844	1.62	894	1.78	942	1.94	990	2.10	1038	2.26	1087	2.42	1137	2.57	1191	2.72
3800	761	1.48	818	1.63	871	1.79	921	1.95	969	2.12	1017	2.28	1065	2.44	1114	2.59	1164	2.75	1218	2.89
4000	789	1.66	846	1.82	899	1.98	949	2.14	997	2.31	1045	2.47	1093	2.63	1142	2.78	1192	2.93	1246	3.08
4200	818	1.87	875	2.03	928	2.19	978	2.35	1026	2.51	1074	2.67	1121	2.83	1170	2.99	1221	3.14	1275	3.29
4400	847	2.09	904	2.25	957	2.41	1007	2.57	1055	2.73	1103	2.90	1151	3.06	1199	3.21	1250	3.36	1304	3.51
4600	877	2.33	934	2.49	986	2.65	1036	2.81	1085	2.97	1132	3.14	1180	3.29	1229	3.45	1280	3.60	1334	3.75
4800	907	2.59	963	2.75	1016	2.91	1066	3.07	1115	3.23	1162	3.39	1210	3.55	1259	3.71	1310	3.86	1364	4.01
5000	937	2.86	993	3.02	1046	3.18	1096	3.34	1145	3.50	1192	3.66	1240	3.82	1289	3.98	1340	4.13	1394	4.28
5200	967	3.15	1023	3.31	1076	3.47	1126	3.63	1175	3.79	1222	3.95	1270	4.11	1319	4.27	1370	4.42	1424	4.57
5400	997	3.45	1053	3.61	1106	3.77	1156	3.93	1205	4.09	1252	4.26	1300	4.41	1349	4.57	1400	4.72	1454	4.87
5600	1027	3.77	1083	3.93	1136	4.09	1186	4.25	1235	4.41	1282	4.57	1330	4.73	1379	4.89	1430	5.04	1484	5.19
5800	1057	4.11	1113	4.26	1166	4.42	1216	4.59	1264	4.75	1312	4.91	1360	5.07	1409	5.22	-	-	-	-
6000	1086	4.46	1143	4.61	1196	4.77	1246	4.93	1294	5.10	1342	5.26	-	-	-	-	-	-	-	-
6200	1116	4.82	1172	4.98	1225	5.14	1275	5.30	-	-	-	-	-	-	-	-	-	-	-	-
	Hi Static 5 HP & Drive						5 HP & Field Supplied Drive													

1. Blower performance includes gas heat exchangers and 2” filters. See STATIC RESISTANCE table for additional applications.
2. See RPM SELECTION table to determine desired motor sheave setting and to determine the maximum continuous BHP.
3. kW = BHP x 0.932.

ZF078-150 Bottom Duct Application

ZF078 (6.5 Ton) Bottom Duct

Air Flow (CFM)	Available External Static Pressure - IWG[1]																			
	0.2		0.4		0.6		0.8		1.0		1.2		1.4		1.6		1.8		2.0	
	RPM	BHP	RPM	BHP	RPM	BHP	RPM	BHP	RPM	BHP	RPM	BHP	RPM	BHP	RPM	BHP	RPM	BHP	RPM	BHP
	Field Supplied Drive				Standard 1.5 HP & Drive						Hi Static 2 HP & Drive									
1800	775	0.31	850	0.53	924	0.72	998	0.89	1072	1.05	1147	1.20	1224	1.35	1303	1.51	1384	1.69	1469	1.89
2000	803	0.45	878	0.67	952	0.86	1026	1.03	1100	1.19	1175	1.34	1252	1.49	1331	1.65	1412	1.83	1497	2.03
2200	838	0.60	913	0.82	986	1.01	1060	1.19	1134	1.34	1210	1.49	1286	1.65	1365	1.81	1447	1.98	1532	2.18
2400	878	0.78	953	1.00	1027	1.19	1100	1.36	1174	1.52	1250	1.67	1327	1.82	1405	1.98	1487	2.16	-	-
2600	923	0.98	997	1.20	1071	1.39	1145	1.56	1219	1.72	1294	1.87	1371	2.02	1450	2.18	-	-	-	-
2800	971	1.20	1046	1.42	1119	1.61	1193	1.78	1267	1.94	1343	2.09	1419	2.24	-	-	-	-	-	-
3000	1023	1.44	1097	1.66	1171	1.85	1245	2.03	1319	2.18	-	-	-	-	-	-	-	-	-	-
3200	1077	1.71	1151	1.93	1225	2.12	1299	2.29	-	-	-	-	-	-	-	-	-	-	-	-
3400	1133	1.99	1208	2.21	-	-	-	-	-	-	-	-	-	-	-	-	-	-	-	-
									2 HP & Field Supplied Drive											

1. Blower performance includes gas heat exchangers and 2” filters. See STATIC RESISTANCE table for additional applications.
2. See RPM SELECTION table to determine desired motor sheave setting and to determine the maximum continuous BHP.
3. kW = BHP x 0.932.

ZF090 (7.5 Ton) Bottom Duct

Air Flow (CFM)	Available External Static Pressure - IWG[1]																			
	0.2		0.4		0.6		0.8		1.0		1.2		1.4		1.6		1.8		2.0	
	RPM	BHP	RPM	BHP	RPM	BHP	RPM	BHP	RPM	BHP	RPM	BHP	RPM	BHP	RPM	BHP	RPM	BHP	RPM	BHP
	Field Supplied Drive				Standard 1.5 HP & Drive						Hi Static 3 HP & Drive									
2000	803	0.45	878	0.67	952	0.86	1026	1.03	1100	1.19	1175	1.34	1252	1.49	1331	1.65	1412	1.83	1497	2.03
2200	838	0.60	913	0.82	986	1.01	1060	1.19	1134	1.34	1210	1.49	1286	1.65	1365	1.81	1447	1.98	1532	2.18
2400	878	0.78	953	1.00	1027	1.19	1100	1.36	1174	1.52	1250	1.67	1327	1.82	1405	1.98	1487	2.16	1572	2.36
2600	923	0.98	997	1.20	1071	1.39	1145	1.56	1219	1.72	1294	1.87	1371	2.02	1450	2.18	1532	2.36	1617	2.56
2800	971	1.20	1046	1.42	1119	1.61	1193	1.78	1267	1.94	1343	2.09	1419	2.24	1498	2.40	1580	2.58	1665	2.78
3000	1023	1.44	1097	1.66	1171	1.85	1245	2.03	1319	2.18	1394	2.33	1471	2.49	1550	2.65	1632	2.82	1717	3.02
3200	1077	1.71	1151	1.93	1225	2.12	1299	2.29	1373	2.45	1448	2.60	1525	2.75	1604	2.91	1686	3.09	1771	3.29
3400	1133	1.99	1208	2.21	1282	2.41	1356	2.58	1430	2.73	1505	2.88	1582	3.04	1661	3.20	1742	3.37	-	-
3600	1192	2.30	1267	2.52	1341	2.71	1414	2.88	1489	3.04	1564	3.19	1641	3.34	-	-	-	-	-	-
3800	1253	2.63	1327	2.85	1401	3.04	1475	3.21	1549	3.37	-	-	-	-	-	-	-	-	-	-
											3 HP & Field Supplied Drive									

1. Blower performance includes gas heat exchangers and 2” filters. See STATIC RESISTANCE table for additional applications.
2. See RPM SELECTION table to determine desired motor sheave setting and to determine the maximum continuous BHP.
3. kW = BHP x 0.932.

ZF102 (8.5 Ton) Bottom Duct

Air Flow (CFM)	Available External Static Pressure - IWG[1]																			
	0.2		0.4		0.6		0.8		1.0		1.2		1.4		1.6		1.8		2.0	
	RPM	BHP	RPM	BHP	RPM	BHP	RPM	BHP	RPM	BHP	RPM	BHP	RPM	BHP	RPM	BHP	RPM	BHP	RPM	BHP
	FS[4]				Standard 2 HP & Drive								Hi Static 3 HP & Drive							
2600	674	0.71	731	0.88	786	1.05	838	1.24	887	1.42	933	1.59	974	1.74	1010	1.87	1040	1.97	1064	2.03
2800	689	0.86	746	1.02	801	1.20	854	1.38	903	1.56	948	1.73	989	1.88	1025	2.01	1056	2.11	1080	2.17
3000	707	1.01	764	1.17	819	1.35	872	1.53	921	1.71	966	1.88	1007	2.03	1043	2.16	1074	2.26	1098	2.32
3200	728	1.17	785	1.33	840	1.51	892	1.69	941	1.87	987	2.04	1028	2.20	1064	2.33	1094	2.42	1118	2.48
3400	751	1.34	808	1.51	863	1.68	915	1.87	964	2.05	1010	2.22	1051	2.37	1087	2.50	1117	2.60	1141	2.66
3600	776	1.53	833	1.70	888	1.87	941	2.06	990	2.24	1035	2.41	1076	2.56	1112	2.69	1142	2.79	1167	2.85
3800	804	1.74	861	1.90	916	2.08	969	2.26	1018	2.44	1063	2.61	1104	2.77	1140	2.90	1170	2.99	1194	-
4000	835	1.97	892	2.13	947	2.31	999	2.49	1048	2.67	1094	2.84	1135	2.99	-	-	-	-	-	-
4200	867	2.21	924	2.37	979	2.55	1032	2.73	1081	2.91	1127	3.08	-	-	-	-	-	-	-	-
													3 HP & Field Supplied Drive							

1. Blower performance includes gas heat exchangers and 2” filters. See STATIC RESISTANCE table for additional applications.
2. See RPM SELECTION table to determine desired motor sheave setting and to determine the maximum continuous BHP.
3. kW = BHP x 0.932
4. Field Supplied Drive.

ZF120 (10 Ton) Bottom Duct

Air Flow (CFM)	Available External Static Pressure - IWG[1]																			
	0.2		0.4		0.6		0.8		1.0		1.2		1.4		1.6		1.8		2.0	
	RPM	BHP	RPM	BHP	RPM	BHP	RPM	BHP	RPM	BHP	RPM	BHP	RPM	BHP	RPM	BHP	RPM	BHP	RPM	BHP
	Field Supplied Drive		Standard 2 HP & Drive										Hi Static 3 HP & Drive							
2600	722	0.83	776	0.97	828	1.11	878	1.25	926	1.37	973	1.50	1018	1.62	1063	1.74	1106	1.86	1149	1.99
2800	744	0.97	798	1.12	850	1.26	900	1.39	949	1.52	995	1.64	1041	1.76	1085	1.88	1128	2.00	1171	2.13
3000	769	1.13	823	1.28	875	1.42	925	1.55	974	1.68	1020	1.80	1066	1.92	1110	2.05	1153	2.17	1196	2.29
3200	797	1.32	851	1.46	903	1.60	953	1.74	1001	1.86	1048	1.99	1093	2.11	1138	2.23	1181	2.35	1224	2.48
3400	828	1.52	882	1.67	934	1.81	983	1.94	1032	2.07	1078	2.19	1124	2.32	1168	2.44	1212	2.56	1254	2.68
3600	861	1.75	915	1.90	967	2.04	1017	2.17	1065	2.30	1112	2.42	1157	2.54	1201	2.67	1245	2.79	1287	2.91
3800	897	2.00	951	2.15	1002	2.29	1052	2.42	1101	2.55	1147	2.67	1193	2.80	1237	2.92	1280	3.04	1323	3.16
4000	935	2.27	989	2.42	1041	2.56	1091	2.69	1139	2.82	1186	2.95	1231	3.07	1275	3.19	1319	3.31	1362	3.43
4200	976	2.57	1030	2.72	1082	2.86	1132	2.99	1180	3.12	1227	3.24	1272	3.36	-	-	-	-	-	-
4400	1019	2.88	1073	3.03	1125	3.17	1175	3.30	1223	3.43	-	-	-	-	-	-	-	-	-	-
4600	1065	3.22	1119	3.36	-	-	-	-	-	-	-	-	-	-	-	-	-	-	-	-
					3 HP & Field Supplied Drive															

1. Blower performance includes gas heat exchangers and 2” filters. See STATIC RESISTANCE table for additional applications.
2. See RPM SELECTION table to determine desired motor sheave setting and to determine the maximum continuous BHP.
3. kW = BHP x 0.932.

ZF150 (12.5 Ton) Bottom Duct

Air Flow (CFM)	Available External Static Pressure - IWG[1]																			
	0.2		0.4		0.6		0.8		1.0		1.2		1.4		1.6		1.8		2.0	
	RPM	BHP	RPM	BHP	RPM	BHP	RPM	BHP	RPM	BHP	RPM	BHP	RPM	BHP	RPM	BHP	RPM	BHP	RPM	BHP
	3 HP & Field Supplied Drive				Standard 3 HP & Drive										Hi Static 5 HP & Drive					
3200	823	1.28	861	1.47	906	1.64	955	1.80	1007	1.95	1059	2.12	1109	2.29	1155	2.50	1194	2.73	1225	3.01
3400	860	1.48	898	1.67	942	1.84	992	2.00	1044	2.16	1095	2.32	1145	2.50	1191	2.70	1231	2.94	1262	3.22
3600	898	1.71	935	1.90	980	2.07	1030	2.23	1081	2.39	1133	2.55	1183	2.73	1229	2.94	1269	3.17	1300	3.45
3800	936	1.97	974	2.16	1019	2.33	1068	2.49	1120	2.64	1172	2.81	1222	2.98	1267	3.19	1307	3.42	1338	3.70
4000	975	2.24	1013	2.43	1057	2.60	1107	2.76	1158	2.92	1210	3.08	1260	3.26	1306	3.46	1346	3.70	1377	3.97
4200	1014	2.54	1052	2.73	1096	2.90	1146	3.05	1197	3.21	1249	3.38	1299	3.55	1345	3.76	1385	3.99	1416	4.27
4400	1053	2.85	1091	3.04	1135	3.21	1185	3.37	1236	3.53	1288	3.69	1338	3.87	1384	4.07	1424	4.31	1455	4.58
4600	1091	3.19	1129	3.38	1174	3.55	1223	3.71	1275	3.86	1327	4.03	1377	4.20	1423	4.41	1462	4.64	1494	4.92
4800	1130	3.54	1168	3.73	1213	3.90	1262	4.06	1314	4.22	1365	4.38	1415	4.56	1461	4.76	1501	5.00	1532	5.27
5000	1168	3.92	1206	4.11	1251	4.28	1300	4.44	1352	4.59	1404	4.76	1454	4.94	1500	5.14	1539	5.37	-	-
5200	1206	4.31	1244	4.50	1288	4.67	1338	4.83	1389	4.99	1441	5.15	1491	5.33	1537	5.53	-	-	-	-
5400	1243	4.72	1281	4.91	1326	5.08	1375	5.24	1427	5.40	1479	5.56	-	-	-	-	-	-	-	-
5600	1280	5.15	1318	5.34	1362	5.51	-	-	-	-	-	-	-	-	-	-	-	-	-	-
5800	1316	5.60	-	-	-	-	-	-	-	-	-	-	-	-	-	-	-	-	-	-
									5 HP & Field Supplied Drive											

1. Blower performance includes gas heat exchangers and 2” filters. See STATIC RESISTANCE table for additional applications.
2. See RPM SELECTION table to determine desired motor sheave setting and to determine the maximum continuous BHP.
3. kW = BHP x 0.932.

RPM Selection

Size (Tons)	Model	HP	Max BHP	Motor Sheave	Blower Sheave	6 Turns Open	5 Turns Open	4 Turns Open	3 Turns Open	2 Turns Open	1 Turn Open	Fully Closed
078 (6.5)	ZF	1.5	1.73	1VM50	AK74	N/A	887	936	986	1035	1084	1134
		2	2.30	1VM50	AK64	N/A	1039	1094	1150	1207	1256	1308
090 (7.5)	ZF	1.5	1.73	1VM50	AK74	N/A	887	936	986	1035	1084	1134
		3	3.45	1VM50	AK61	N/A	1088	1147	1205	1265	1312	1365
102 (8.5)	ZF	2	2.30	1VM50	AK94	N/A	690	728	767	805	843	882
		3	3.45	1VM50	AK74	N/A	887	936	986	1035	1084	1134
120 (10)	ZF	2	2.30	1VM50	AK84	N/A	776	819	863	906	949	992
		3	3.45	1VM50	AK74	N/A	887	936	986	1035	1084	1134
150 (12.5)	ZF	3	3.45	1VM50	AK74	N/A	887	936	986	1035	1084	1134
		5	5.75	1VP56	BK77	1052	1095	1136	1175	1216	1272	N/A

Additional Static Resistance

Size (Tons)	Model	CFM	Cooling Only[1]	Economizer[2,3]	4" Filter[2]	Electric Heat kW[2]				
						9	18	24	36	54
078 (6.5) 090 (7.5)	ZF	1900	0.00	0.07	0.10	0.05	0.06	0.07	0.08	0.10
		2100	-0.01	0.09	0.11	0.06	0.07	0.08	0.09	0.11
		2300	-0.01	0.11	0.12	0.07	0.08	0.09	0.10	0.13
		2500	-0.02	0.13	0.14	0.08	0.09	0.10	0.11	0.14
		2700	-0.03	0.16	0.15	0.09	0.10	0.12	0.13	0.16
		2900	-0.04	0.18	0.16	0.10	0.11	0.13	0.14	0.18
		3100	-0.05	0.20	0.18	0.12	0.13	0.15	0.16	0.20
		3300	-0.06	0.22	0.19	0.13	0.14	0.17	0.18	0.22
		3500	-0.07	0.24	0.20	0.15	0.16	0.19	0.20	0.24
		3700	-0.08	0.27	0.21	0.17	0.18	0.21	0.22	0.26
		3900	-0.09	0.29	0.23	0.19	0.20	0.23	0.24	0.28
		4100	-0.09	0.31	0.24	0.21	0.22	0.25	0.26	0.31
		4300	-0.10	0.30	0.25	0.23	0.24	0.28	0.29	0.34
		4500	-0.11	0.35	0.26	0.25	0.26	0.30	0.31	0.37
102 (8.5) 120 (10) 150 (12.5)	ZF	1900	0.06	0.02	0.12	0.05	0.06	0.07	0.08	0.10
		2100	0.07	0.02	0.13	0.06	0.07	0.08	0.09	0.11
		2300	0.08	0.04	0.14	0.07	0.08	0.09	0.10	0.13
		2500	0.09	0.11	0.16	0.08	0.09	0.10	0.11	0.14
		2700	0.11	0.18	0.17	0.09	0.10	0.12	0.13	0.16
		2900	0.12	0.25	0.19	0.10	0.11	0.13	0.14	0.18
		3100	0.14	0.31	0.20	0.12	0.13	0.15	0.16	0.20
		3300	0.16	0.37	0.22	0.13	0.14	0.17	0.18	0.22
		3500	0.18	0.43	0.26	0.15	0.16	0.19	0.20	0.24
		3700	0.20	0.49	0.27	0.17	0.18	0.21	0.22	0.26
		3900	0.23	0.54	0.29	0.19	0.20	0.23	0.24	0.28
		4100	0.25	0.58	0.32	0.21	0.22	0.25	0.26	0.31
		4300	0.28	0.65	0.35	0.23	0.24	0.28	0.29	0.34
		4500	0.30	0.69	0.38	0.25	0.26	0.30	0.31	0.37
		4700	0.33	0.74	0.41	0.28	0.29	0.33	0.34	0.40
		4900	0.36	0.78	0.44	0.30	0.31	0.35	0.37	0.43
		5100	0.39	0.82	0.47	0.33	0.34	0.38	0.40	0.46
		5300	0.42	0.86	0.51	0.35	0.37	0.41	0.43	0.49
		5500	0.45	0.89	0.55	0.38	0.40	0.44	0.46	0.53
		5700	0.48	0.93	0.58	0.41	0.43	0.47	0.49	0.56
		5900	0.52	0.96	0.62	0.44	0.46	0.50	0.53	0.59
		6100	0.56	0.98	0.67	0.47	0.49	0.53	0.56	0.62
		6300	0.60	1.01	0.71	0.50	0.53	0.56	0.59	0.65

1. Add these values to the available static resistance in the respective Blower Performance Tables.
2. Deduct these values from the available external static pressure shown in the respective Blower Performance Tables.
3. The pressure drop through the economizer is greater for 100% outdoor air than for 100% return air. If the resistance of the return air duct is less than 0.25 IWG, the unit will deliver less CFM during full economizer operation.

Drive Selection

1. Determine side or bottom supply duct Application.
2. Determine desired airflow.
3. Calculate or measure the amount of external static pressure.
4. Using the operating point determined from steps 1, 2 & 3, locate this point on the appropriate supply air blower performance table. (Linear interpolation may be necessary.)
5. Noting the RPM and BHP from step 4, locate the appropriate motor and, or drive on the RPM selection table.
6. Review the BHP compared to the motor options available. Select the appropriate motor and, or drive.
7. Review the RPM range for the motor options available. Select the appropriate drive if multiple drives are available for the chosen motor.
8. Determine turns open to obtain the desired operation point.

Example

1. 2600 CFM
2. 1.6 iwg
3. Using the supply air blower performance table below, the following data point was located: 1268 RPM & 1.95 BHP.
4. Using the RPM selection table below, Size X and Model Y is found.
5. 1.95 BHP exceeds the maximum continuous BHP rating of the 1.5 HP motor. The 2 HP motor is required.
6. 1268 RPM is within the range of the 2 HP drives.
7. Using the 2 HP motor and drive, .5 turns open will achieve 1268 RPM.

Airflow Performance

Example Supply Air Blower Performance

Air Flow (CFM)	Available External Static Pressure - IWG																			
	0.2		0.4		0.6		0.8		1.0		1.2		1.4		1.6		1.8		2.0	
	RPM	BHP	RPM	BHP	RPM	BHP	RPM	BHP	RPM	BHP	RPM	BHP	RPM	BHP	RPM	BHP	RPM	BHP	RPM	BHP
	1.5 HP & Field Supplied Drive								Standard 1.5 HP & Drive						Alternate 2 HP & Drive					
2200	804	0.50	866	0.71	925	0.90	982	1.06	1038	1.21	1092	1.35	1147	1.48	1203	1.61	1259	1.73	1317	1.87
2400	835	0.66	897	0.87	956	1.06	1013	1.22	1069	1.37	1124	1.51	1178	1.64	1234	1.77	1290	1.90	1348	2.03
2600	869	0.84	931	1.05	990	1.24	1047	1.40	1103	1.55	1158	1.69	1212	1.82	1268	1.95	1324	2.07	1382	2.21
2800	906	1.03	968	1.25	1027	1.43	1084	1.60	1139	1.75	1194	1.89	1249	2.02	1304	2.14	1361	2.27	-	-

Table X: RPM Selection

Size (Tons)	Model	HP	Max BHP	Motor Sheave	Blower Sheave	6 Turns Open	5 Turns Open	4 Turns Open	3 Turns Open	2 Turns Open	1 Turn Open	Fully Closed
X	Y	1.5	1.73	1VM50	AK74	N/A	897	945	991	1035	1079	1126
		2	2.30	1VM50	AK64	N/A	1039	1094	1150	1207	1256	1308

Altitude/Temperature Correction Factors

Air Temp.	Altitude (Ft.)										
	0	1000	2000	3000	4000	5000	6000	7000	8000	9000	10000
40	1.060	1.022	0.986	0.950	0.916	0.882	0.849	0.818	0.788	0.758	0.729
50	1.039	1.002	0.966	0.931	0.898	0.864	0.832	0.802	0.772	0.743	0.715
60	1.019	0.982	0.948	0.913	0.880	0.848	0.816	0.787	0.757	0.729	0.701
70	1.000	0.964	0.930	0.896	0.864	0.832	0.801	0.772	0.743	0.715	0.688
80	0.982	0.947	0.913	0.880	0.848	0.817	0.787	0.758	0.730	0.702	0.676
90	0.964	0.929	0.897	0.864	0.833	0.802	0.772	0.744	0.716	0.689	0.663
100	0.946	0.912	0.880	0.848	0.817	0.787	0.758	0.730	0.703	0.676	0.651

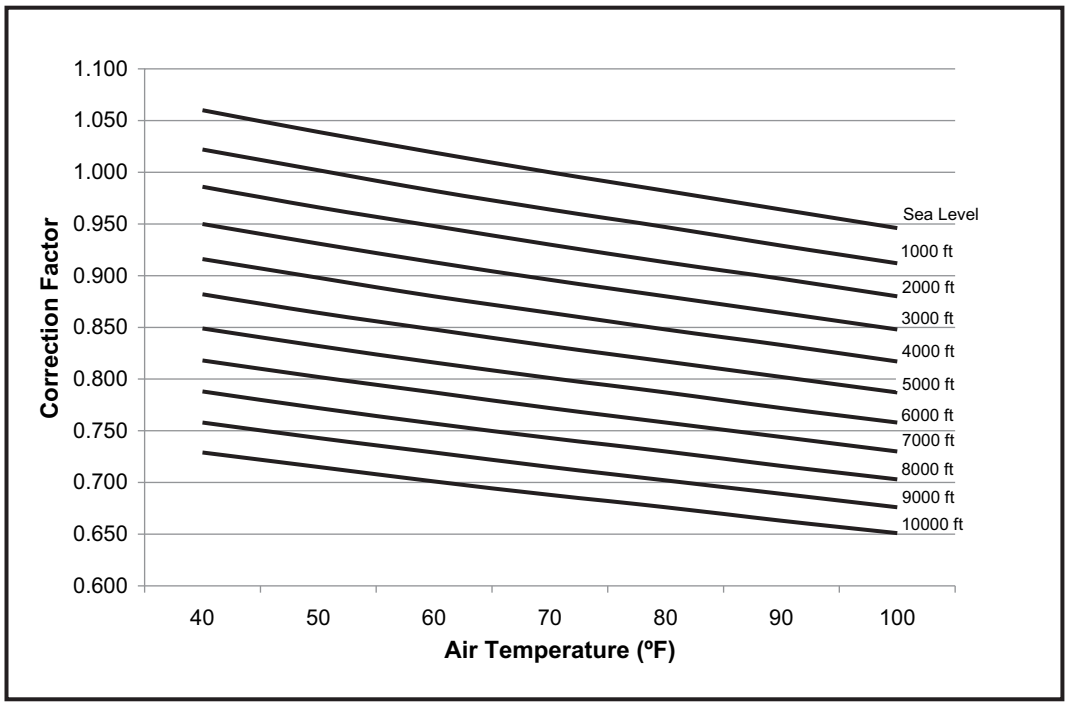

Gas Heat Minimum Supply Air

Size (Tons)	Model	Heat Size	Supply Air (CFM)			
			Cooling		Heating	
			Min	Max	Min	Max
078 (6.5)	ZF	N12	1950	3250	1950	3250
		N18	1950	3250	1950	3250
090 (7.5)	ZF	N12	2250	3750	2250	3750
		N18	2250	3750	2250	3750
102 (8.5)	ZF	N12	2550	4250	2550	4250
		N18	2550	4250	2550	4250
120 (10)	ZF	N18	3000	5000	3000	5000
		N24	3000	5000	3000	5000
150 (12.5)	ZF	N18	3750	6250	3750	6250
		N24	3750	6250	3750	6250

Electric Heat Minimum Supply Air

Size (Tons)	Model	Voltage	Minimum Supply Air (CFM)				
			Heater kW				
			9	18	24	36	54
078 (6.5)	ZF	208/230-3-60	1950	1950	1950	1950	-
		460-3-60	1950	1950	1950	1950	-
		600-3-60	1950	1950	1950	1950	-
090 (7.5)	ZF	208/230-3-60	2250	2250	2250	2250	-
		460-3-60	2250	2250	2250	2250	-
		600-3-60	2250	2250	2250	2250	-
102 (8.5)	ZF	208/230-3-60	2550	2550	2550	2550	-
		460-3-60	2550	2550	2550	2550	-
		600-3-60	2550	2550	2550	2550	-
120 (10)	ZF	208/230-3-60	-	3000	3000	3000	3500
		460-3-60	-	3000	3000	3000	3000
		600-3-60	-	3000	3000	3000	3500
150 (12.5)	ZF	208/230-3-60	-	3750	3750	3750	4000
		460-3-60	-	3750	3750	3750	3750
		600-3-60	-	3750	3750	3750	3750

Indoor Blower Specifications

Size (Tons)	Model	Motor					Motor Sheave			Blower Sheave			Belt
		HP	RPM	Eff.	SF	Frame	Datum Dia. (in.)	Bore (in.)	Model	Datum Dia. (in.)	Bore (in.)	Model	
078 (6.5)	ZF	1-1/2	1725	0.8	1.15	56	3.4 - 4.4	7/8	1VM50	7.0	1	AK74	A49
		2	1725	0.8	1.15	56	3.4 - 4.4	7/8	1VM50	6.0	1	AK64	A49
090 (7.5)	ZF	1-1/2	1725	0.8	1.15	56	3.4 - 4.4	7/8	1VM50	7.0	1	AK74	A49
		3	1725	0.8	1.15	56	3.4 - 4.4	7/8	1VM50	5.7	1	AK61	A49
102 (8.5)	ZF	2	1725	0.8	1.15	56	3.4 - 4.4	7/8	1VM50	9.0	1	AK94	A56
		3	1725	0.8	1.15	56	3.4 - 4.4	7/8	1VM50	7.0	1	AK74	A54
120 (10)	ZF	2	1725	0.8	1.15	56	3.4 - 4.4	7/8	1VM50	8.0	1	AK84	A56
		3	1725	0.8	1.15	56	3.4 - 4.4	7/8	1VM50	7.0	1	AK74	A54
150 (12.5)	ZF	3	1725	0.8	1.15	56	3.4 - 4.4	7/8	1VM50	7.0	1	AK74	A54
		5	1725	0.87	1.15	184T	4.3 - 5.3	1-1/8	1VP56	6.7	1	BK77	BX55

Power Exhaust Specifications

Model	Voltage	Motor			Motor			Fuse Size	CFM @ 0.1 ESP
		HP	RPM[1]	QTY	LRA	FLA	MCA		
2PE04703225	208/230-1-60	3/4	1075	1	7.8	5	6.3	10	3800
2PE04703246	460-1-60	3/4	1075	1	3.4	2.2	2.8	5	3800
2PE04703258	575-1-60	3/4	1050	1	2.9	1.5	1.9	4	3800

1. Motors are multi-tapped and factory wired for high speed.

Electric Heat Multipliers

Voltage		kW Capacity Multipliers[1]
Nominal	Applied	
240	208	0.75
	230	0.92
480	460	0.92
600	575	0.92

1. Electric heaters are rated at nominal voltage. Use this table to determine the electric heat capacity for heaters applied at lower voltages.

Sound Performance

Indoor Sound Power Levels

Size (Tons)	Model	CFM	ESP (IWG)	Blower		Sound Power, dB (10^{-12}) Watts								
						Sound Rating[1] dB (A)	Octave Band Centerline Frequency (Hz)							
				RPM	BHP		63	125	250	500	1000	2000	4000	8000
078 (6.5)	ZF	2600	0.6	812	1.14	74	71	73	73	71	69	65	65	60
090 (7.5)	ZF	3000	0.6	854	1.47	77	74	76	76	74	72	68	68	63
102 (8.5)	ZF	3400	0.6	872	1.65	80	77	79	79	77	75	71	71	66
120 (10)	ZF	4000	0.6	959	2.29	83	80	82	82	80	78	74	74	69
150 (12.5)	ZF	5000	0.6	1132	3.74	87	84	86	86	84	82	78	78	73

1. These values have been accessed using a model of sound propagation from a point source into the hemispheric/free field. The dBA values provided are to be used for reference only. Calculation of dBA values cover matters of system design and the fan manufacture has no way of knowing the details of each system. This constitutes an exception to any specification or guarantee requiring a dBA value of sound data in any other form than sound power level ratings.

Outdoor Sound Power Levels
ZF078-150

Size (Tons)	Model	Sound Rating[1] dB (A)	Octave Band Centerline Frequency (Hz)							
			63	125	250	500	1000	2000	4000	8000
078 (6.5)	ZF	84	86.0	87.5	86.0	82.5	79.0	73.5	68.5	62.0
090 (7.5)	ZF	89	89.5	92.0	89.0	87.5	84.0	78.5	73.5	66.5
102 (8.5)	ZF	91	91.5	93.5	92.5	89.0	85.5	80.5	76.0	71.0
120 (10)	ZF	92	99.5	94.5	92.0	90.0	87.0	81.0	76.0	70.0
150 (12.5)	ZF	88	91.0	92.5	90.0	85.0	81.5	77.0	73.0	66.5

1. Rated in accordance with AHRI 270 standard.

Electrical Data

ZF078-150 Standard Motor - Without Powered Convenience Outlet

Size (Tons)	Volt	Compressors (each)			OD Fan Motors (each)	Supply Blower Motor	Pwr Exh Motor	Pwr Conv Outlet	Electric Heat Option				MCA[1] (Amps)	MCA[1] w/Pwr Exh (Amps)	Max Fuse[2]/ Breaker[3] Size (Amps)	Max Fuse[2]/ Breaker[3] Size w/ Pwr Exh (Amps)
		RLA	LRA	MCC	FLA	FLA	FLA	FLA	Model	kW	Stages	Amps				
078 (6)	208	9.8	68	15	2.1	5.2	5.5		None	-	-	-	31.5	37	40	45
									E09	6.8	1	18.9	31.5	37	40	45
									E18	13.5	2	37.5	53.4	60.3	60	70
									E24	18	2	50	69	75.9	70	80
									E36	25.5	2	70.8	95	101.9	100	110
	230	9.8	68	15	2.1	5.2	5.5		None	-	-	-	31.5	37	40	45
									E09	9	1	21.7	33.6	40.5	40	45
									E18	18	2	43.3	60.6	67.5	70	70
									E24	24	2	57.7	78.6	85.5	80	90
									E36	34	2	81.8	108.8	115.6	110	125
	460	4.9	34	8	1.26	2.6	2.2		None	-	-	-	16.1	18.3	20	20
									E09	9	1	10.8	16.8	19.5	20	20
									E18	18	2	21.7	30.4	33.1	35	35
									E24	24	2	28.9	39.4	42.1	40	45
									E36	34	2	40.9	54.4	57.1	60	60
	575	3.8	28	6	0.66	2	1.8		None	-	-	-	11.9	13.7	15	15
									E09	9	1	8.7	13.4	15.6	15	20
									E18	18	2	17.3	24.1	26.4	25	30
									E24	24	2	23.1	31.4	33.6	35	35
									E36	34	2	32.7	43.4	45.6	45	50
090 (7.5)	208	13.8	83.1	22	2.1	5.2	5.5		None	-	-	-	40.5	46	50	50
									E09	6.8	1	18.9	40.5	46	50	50
									E18	13.5	2	37.5	53.4	60.3	60	70
									E24	18	2	50	69	75.9	70	80
									E36	25.5	2	70.8	95	101.9	100	110
	230	13.8	83.1	22	2.1	5.2	5.5		None	-	-	-	40.5	46	50	50
									E09	9	1	21.7	40.5	46	50	50
									E18	18	2	43.3	60.6	67.5	70	70
									E24	24	2	57.7	78.6	85.5	80	90
									E36	34	2	81.8	108.8	115.6	110	125
	460	6.2	41	10	1.26	2.6	2.2		None	-	-	-	19.1	21.3	25	25
									E09	9	1	10.8	19.1	21.3	25	25
									E18	18	2	21.7	30.4	33.1	35	35
									E24	24	2	28.9	39.4	42.1	40	45
									E36	34	2	40.9	54.4	57.1	60	60
	575	4.9	33	8	0.66	2	1.8		None	-	-	-	14.3	16.1	15	20
									E09	9	1	8.7	14.3	16.1	15	20
									E18	18	2	17.3	24.1	26.4	25	30
									E24	24	2	23.1	31.4	33.6	35	35
									E36	34	2	32.7	43.4	45.6	45	50
102 (8.5)	208	12.2	88	19	3.03	6.8	5.5		None	-	-	-	40.4	45.9	50	50
									E09	6.8	1	18.9	40.4	45.9	50	50
									E18	13.5	2	37.5	55.4	62.3	60	70
									E24	18	2	50	71	77.9	80	80
									E36	25.5	2	70.8	97	103.9	100	110
	230	12.2	88	19	3.03	6.8	5.5		None	-	-	-	40.4	45.9	50	50
									E09	9	1	21.7	40.4	45.9	50	50
									E18	18	2	43.3	62.6	69.5	70	70
									E24	24	2	57.7	80.6	87.5	90	90
									E36	34	2	81.8	110.8	117.6	125	125
	460	5.8	44	9	1.6	3.4	2.2		None	-	-	-	19.7	21.9	25	25
									E09	9	1	10.8	19.7	21.9	25	25
									E18	18	2	21.7	31.4	34.1	35	35
									E24	24	2	28.9	40.4	43.1	45	45
									E36	34	2	40.9	55.4	58.1	60	60
	575	4.4	36	6	1.35	2.4	1.8		None	-	-	-	15	16.8	15	20
									E09	9	1	8.7	15	16.8	15	20
									E18	18	2	17.3	24.6	26.9	25	30
									E24	24	2	23.1	31.9	34.1	35	35
									E36	34	2	32.7	43.9	46.1	45	50

ZF078-150 Standard Motor - Without Powered Convenience Outlet (Continued)

Size (Tons)	Volt	Compressors (each)			OD Fan Motors (each)	Supply Blower Motor	Pwr Exh Motor	Pwr Conv Outlet	Electric Heat Option				MCA[1] (Amps)	MCA[1] w/Pwr Exh (Amps)	Max Fuse[2]/ Breaker[3] Size (Amps)	Max Fuse[2]/ Breaker[3] Size w/ Pwr Exh (Amps)
		RLA	LRA	MCC	FLA	FLA	FLA	FLA	Model	kW	Stages	Amps				
120 (10)	208	14.6	110	22	3.03	6.8	5.5		None	-	-	-	45.8	51.3	60	60
									E18	13.5	2	37.5	55.4	62.3	60	70
									E24	18	2	50	71	77.9	80	80
									E36	25.5	2	70.8	97	103.9	100	110
									E54	40.6	2	112.7	149.4	156.3	150	175
	230	14.6	110	22	3.03	6.8	5.5		None	-	-	-	45.8	51.3	60	60
									E18	18	2	43.3	62.6	69.5	70	70
									E24	24	2	57.7	80.6	87.5	90	90
									E36	34	2	81.8	110.8	117.6	125	125
									E54	54	2	129.9	138.4	145.3	150	175
	460	7.4	55	12	1.6	3.4	2.2		None	-	-	-	23.3	25.5	30	30
									E18	18	2	21.7	31.4	34.1	35	35
									E24	24	2	28.9	40.4	43.1	45	45
									E36	34	2	40.9	55.4	58.1	60	60
									E54	54	2	65	69.3	72	80	80
	575	5.6	43	9	1.35	2.4	1.8		None	-	-	-	17.7	19.5	20	25
									E18	18	2	17.3	24.6	26.9	25	30
									E24	24	2	23.1	31.9	34.1	35	35
									E36	34	2	32.7	43.9	46.1	45	50
									E54	54	2	52	55	57.3	60	60
150 (12.5)	208	23.1	160	36	3.03	9.6	5.5		None	-	-	-	73.7	79.2	90	100
									E18	13.5	2	37.5	73.7	79.2	90	100
									E24	18	2	50	74.5	81.4	90	100
									E36	25.5	2	70.8	100.5	107.4	110	110
									E54	40.6	2	112.7	152.9	159.8	175	175
	230	23.1	160	36	3.03	9.6	5.5		None	-	-	-	73.7	79.2	90	100
									E18	18	2	43.3	73.7	79.2	90	100
									E24	24	2	57.7	84.1	91	90	100
									E36	34	2	81.8	114.3	121.1	125	125
									E54	54	2	129.9	141.9	148.8	175	175
	460	12.2	87	19	1.6	4.7	2.2		None	-	-	-	38.6	40.8	50	50
									E18	18	2	21.7	38.6	40.8	50	50
									E24	24	2	28.9	42	44.8	50	50
									E36	34	2	40.9	57	59.8	60	60
									E54	54	2	65	70.9	73.6	80	80
	575	8.7	62	14	1.35	3.6	1.8		None	-	-	-	28.6	30.4	35	35
									E18	18	2	17.3	28.6	30.4	35	35
									E24	24	2	23.1	33.4	35.6	35	40
									E36	34	2	32.7	45.4	47.6	50	50
									E54	54	2	52	56.5	58.8	70	70

1. Minimum Circuit Ampacity.
2. Dual Element, Time Delay Type.
3. HACR type per NEC.

ZF078-150 Hi Static Motor - Without Powered Convenience Outlet

Size (Tons)	Volt	Compressors (each)			OD Fan Motors (each)	Supply Blower Motor	Pwr Exh Motor	Pwr Conv Outlet	Electric Heat Option				MCA[1] (Amps)	MCA[1] w/Pwr Exh (Amps)	Max Fuse[2]/ Breaker[3] Size (Amps)	Max Fuse[2]/ Breaker[3] Size w/ Pwr Exh (Amps)
		RLA	LRA	MCC	FLA	FLA	FLA	FLA	Model	kW	Stages	Amps				
078 (6)	208	9.8	68	15	2.1	6.8	5.5		None	-	-	-	33.1	38.6	40	45
									E09	6.8	1	18.9	33.1	39	40	45
									E18	13.5	2	37.5	55.4	62.3	60	70
									E24	18	2	50	71	77.9	80	80
									E36	25.5	2	70.8	97	103.9	100	110
	230	9.8	68	15	2.1	6.8	5.5		None	-	-	-	33.1	38.6	40	45
									E09	9	1	21.7	35.6	42.5	40	45
									E18	18	2	43.3	62.6	69.5	70	70
									E24	24	2	57.7	80.6	87.5	90	90
									E36	34	2	81.8	110.8	117.6	125	125
	460	4.9	34	8	1.26	3.4	2.2		None	-	-	-	16.9	19.1	20	20
									E09	9	1	10.8	17.8	20.5	20	25
									E18	18	2	21.7	31.4	34.1	35	35
									E24	24	2	28.9	40.4	43.1	45	45
									E36	34	2	40.9	55.4	58.1	60	60
	575	3.8	28	6	0.66	2.4	1.8		None	-	-	-	12.3	14.1	15	15
									E09	9	1	8.7	13.9	16.1	15	20
									E18	18	2	17.3	24.6	26.9	25	30
									E24	24	2	23.1	31.9	34.1	35	35
									E36	34	2	32.7	43.9	46.1	45	50
090 (7.5)	208	13.8	83.1	22	2.1	9.6	5.5		None	-	-	-	44.9	50.4	50	60
									E09	6.8	1	18.9	44.9	50.4	50	60
									E18	13.5	2	37.5	58.9	65.8	60	70
									E24	18	2	50	74.5	81.4	80	90
									E36	25.5	2	70.8	100.5	107.4	110	110
	230	13.8	83.1	22	2.1	9.6	5.5		None	-	-	-	44.9	50.4	50	60
									E09	9	1	21.7	44.9	50.4	50	60
									E18	18	2	43.3	66.1	73	70	80
									E24	24	2	57.7	84.1	91	90	100
									E36	34	2	81.8	114.3	121.1	125	125
	460	6.2	41	10	1.26	4.7	2.2		None	-	-	-	21.2	23.4	25	25
									E09	9	1	10.8	21.2	23.4	25	25
									E18	18	2	21.7	33	35.8	35	40
									E24	24	2	28.9	42	44.8	45	45
									E36	34	2	40.9	57	59.8	60	60
	575	4.9	33	8	0.66	3.6	1.8		None	-	-	-	15.9	17.7	20	20
									E09	9	1	8.7	15.9	17.7	20	20
									E18	18	2	17.3	26.1	28.4	30	30
									E24	24	2	23.1	33.4	35.6	35	40
									E36	34	2	32.7	45.4	47.6	50	50
102 (8.5)	208	12.2	88	19	3.03	9.6	5.5		None	-	-	-	43.2	48.7	50	60
									E09	6.8	1	18.9	43.2	48.7	50	60
									E18	13.5	2	37.5	58.9	65.8	60	70
									E24	18	2	50	74.5	81.4	80	90
									E36	25.5	2	70.8	100.5	107.4	110	110
	230	12.2	88	19	3.03	9.6	5.5		None	-	-	-	43.2	48.7	50	60
									E09	9	1	21.7	43.2	48.7	50	60
									E18	18	2	43.3	66.1	73	70	80
									E24	24	2	57.7	84.1	91	90	100
									E36	34	2	81.8	114.3	121.1	125	125
	460	5.8	44	9	1.6	4.7	2.2		None	-	-	-	21	23.2	25	25
									E09	9	1	10.8	21	23.2	25	25
									E18	18	2	21.7	33	35.8	35	40
									E24	24	2	28.9	42	44.8	45	45
									E36	34	2	40.9	57	59.8	60	60
	575	4.4	36	6	1.35	3.6	1.8		None	-	-	-	16.2	18	20	20
									E09	9	1	8.7	16.2	18	20	20
									E18	18	2	17.3	26.1	28.4	30	30
									E24	24	2	23.1	33.4	35.6	35	40
									E36	34	2	32.7	45.4	47.6	50	50

ZF078-150 Hi Static Motor - Without Powered Convenience Outlet (Continued)

Size (Tons)	Volt	Compressors (each)			OD Fan Motors (each)	Supply Blower Motor	Pwr Exh Motor	Pwr Conv Outlet	Electric Heat Option				MCA[1] (Amps)	MCA[1] w/Pwr Exh (Amps)	Max Fuse[2]/ Breaker[3] Size (Amps)	Max Fuse[2]/ Breaker[3] Size w/ Pwr Exh (Amps)
		RLA	LRA	MCC	FLA	FLA	FLA	FLA	Model	kW	Stages	Amps				
120 (10)	208	14.6	110	22	3.03	9.6	5.5		None	-	-	-	48.6	54.1	60	60
									E18	13.5	2	37.5	58.9	65.8	60	70
									E24	18	2	50	74.5	81.4	80	90
									E36	25.5	2	70.8	100.5	107.4	110	110
									E54	40.6	2	112.7	152.9	159.8	175	175
	230	14.6	110	22	3.03	9.6	5.5		None	-	-	-	48.6	54.1	60	60
									E18	18	2	43.3	66.1	73	70	80
									E24	24	2	57.7	84.1	91	90	100
									E36	34	2	81.8	114.3	121.1	125	125
									E54	54	2	129.9	141.9	148.8	175	175
	460	7.4	55	12	1.6	4.7	2.2		None	-	-	-	24.6	26.8	30	30
									E18	18	2	21.7	33	35.8	35	40
									E24	24	2	28.9	42	44.8	45	45
									E36	34	2	40.9	57	59.8	60	60
									E54	54	2	65	70.9	73.6	80	80
	575	5.6	43	9	1.35	3.6	1.8		None	-	-	-	18.9	20.7	20	25
									E18	18	2	17.3	26.1	28.4	30	30
									E24	24	2	23.1	33.4	35.6	35	40
									E36	34	2	32.7	45.4	47.6	50	50
									E54	54	2	52	56.5	58.8	70	70
150 (12.5)	208	23.1	160	36	3.03	14	5.5		None	-	-	-	78.1	83.6	100	100
									E18	13.5	2	37.5	78.1	83.6	100	100
									E24	18	2	50	80	86.9	100	100
									E36	25.5	2	70.8	106	112.9	110	125
									E54	40.6	2	112.7	158.4	165.3	175	175
	230	23.1	160	36	3.03	14	5.5		None	-	-	-	78.1	83.6	100	100
									E18	18	2	43.3	78.1	83.6	100	100
									E24	24	2	57.7	89.6	96.5	100	100
									E36	34	2	81.8	119.8	126.6	125	150
									E54	54	2	129.9	147.4	154.3	175	175
	460	12.2	87	19	1.6	6.6	2.2		None	-	-	-	40.5	42.7	50	50
									E18	18	2	21.7	40.5	42.7	50	50
									E24	24	2	28.9	44.4	47.1	50	50
									E36	34	2	40.9	59.4	62.1	60	70
									E54	54	2	65	73.3	76	80	90
	575	8.7	62	14	1.35	5.2	1.8		None	-	-	-	30.2	32	35	40
									E18	18	2	17.3	30.2	32	35	40
									E24	24	2	23.1	35.4	37.6	40	40
									E36	34	2	32.7	47.4	49.6	50	50
									E54	54	2	52	58.5	60.8	70	70

1. Minimum Circuit Ampacity.
2. Dual Element, Time Delay Type.
3. HACR type per NEC.

ZF078-150 Standard Motor - With Powered Convenience Outlet

Size (Tons)	Volt	Compressors (each)			OD Fan Motors (each)	Supply Blower Motor	Pwr Exh Motor	Pwr Conv Outlet	Electric Heat Option				MCA[1] (Amps)	MCA[1] w/Pwr Exh (Amps)	Max Fuse[2]/ Breaker[3] Size (Amps)	Max Fuse[2]/ Breaker[3] Size w/ Pwr Exh (Amps)
		RLA	LRA	MCC	FLA	FLA	FLA	FLA	Model	kW	Stages	Amps				
078 (6)	208	9.8	68	15	2.1	5.2	5.5	20	None	-	-	-	41.5	47	50	50
									E09	6.8	1	18.9	42.6	49.5	50	50
									E18	13.5	2	37.5	65.9	72.8	70	80
									E24	18	2	50	81.5	88.4	90	90
									E36	25.5	2	70.8	107.5	114.4	110	125
	230	9.8	68	15	2.1	5.2	5.5	20	None	-	-	-	41.5	47	50	50
									E09	9	1	21.7	46.1	53	50	60
									E18	18	2	43.3	73.1	80	80	80
									E24	24	2	57.7	91.1	98	100	100
									E36	34	2	81.8	121.3	128.1	125	150
	460	4.9	34	8	1.26	2.6	2.2	20	None	-	-	-	21.2	23.4	25	25
									E09	9	1	10.8	23	25.8	25	30
									E18	18	2	21.7	36.6	39.4	40	40
									E24	24	2	28.9	45.6	48.4	50	50
									E36	34	2	40.9	60.6	63.4	70	70
	575	3.8	28	6	0.66	2	1.8	20	None	-	-	-	15.9	17.7	20	20
									E09	9	1	8.7	18.4	20.6	20	25
									E18	18	2	17.3	29.1	31.4	30	35
									E24	24	2	23.1	36.4	38.6	40	40
									E36	34	2	32.7	48.4	50.6	50	60
090 (7.5)	208	13.8	83.1	22	2.1	5.2	5.5	20	None	-	-	-	50.5	56	60	60
									E09	6.8	1	18.9	50.5	56	60	60
									E18	13.5	2	37.5	65.9	72.8	70	80
									E24	18	2	50	81.5	88.4	90	90
									E36	25.5	2	70.8	107.5	114.4	110	125
	230	13.8	83.1	22	2.1	5.2	5.5	20	None	-	-	-	50.5	56	60	60
									E09	9	1	21.7	50.5	56	60	60
									E18	18	2	43.3	73.1	80	80	80
									E24	24	2	57.7	91.1	98	100	100
									E36	34	2	81.8	121.3	128.1	125	150
	460	6.2	41	10	1.26	2.6	2.2	20	None	-	-	-	24.1	26.3	30	30
									E09	9	1	10.8	24.1	26.3	30	30
									E18	18	2	21.7	36.6	39.4	40	40
									E24	24	2	28.9	45.6	48.4	50	50
									E36	34	2	40.9	60.6	63.4	70	70
	575	4.9	33	8	0.66	2	1.8	20	None	-	-	-	18.3	20.1	20	25
									E09	9	1	8.7	18.4	20.6	20	25
									E18	18	2	17.3	29.1	31.4	30	35
									E24	24	2	23.1	36.4	38.6	40	40
									E36	34	2	32.7	48.4	50.6	50	60
102 (8.5)	208	12.2	88	19	3.03	6.8	5.5	20	None	-	-	-	50.4	55.9	60	60
									E09	6.8	1	18.9	50.4	55.9	60	60
									E18	13.5	2	37.5	67.9	74.8	70	80
									E24	18	2	50	83.5	90.4	90	100
									E36	25.5	2	70.8	109.5	116.4	110	125
	230	12.2	88	19	3.03	6.8	5.5	20	None	-	-	-	50.4	55.9	60	60
									E09	9	1	21.7	50.4	55.9	60	60
									E18	18	2	43.3	75.1	82	80	90
									E24	24	2	57.7	93.1	100	100	100
									E36	34	2	81.8	123.3	130.1	125	150
	460	5.8	44	9	1.6	3.4	2.2	20	None	-	-	-	24.7	26.9	30	30
									E09	9	1	10.8	24.7	26.9	30	30
									E18	18	2	21.7	37.6	40.4	40	45
									E24	24	2	28.9	46.6	49.4	50	50
									E36	34	2	40.9	61.6	64.4	70	70
	575	4.4	36	6	1.35	2.4	1.8	20	None	-	-	-	19	20.8	20	25
									E09	9	1	8.7	19	21.1	20	25
									E18	18	2	17.3	29.6	31.9	30	35
									E24	24	2	23.1	36.9	39.1	40	40
									E36	34	2	32.7	48.9	51.1	50	60

ZF078-150 Standard Motor - With Powered Convenience Outlet (Continued)

Size (Tons)	Volt	Compressors (each)			OD Fan Motors (each)	Supply Blower Motor	Pwr Exh Motor	Pwr Conv Outlet	Electric Heat Option				MCA[1] (Amps)	MCA[1] w/Pwr Exh (Amps)	Max Fuse[2]/ Breaker[3] Size (Amps)	Max Fuse[2]/ Breaker[3] Size w/ Pwr Exh (Amps)
		RLA	LRA	MCC	FLA	FLA	FLA	FLA	Model	kW	Stages	Amps				
120 (10)	208	14.6	110	22	3.03	6.8	5.5	20	None	-	-	-	55.8	61.3	70	70
									E18	13.5	2	37.5	67.9	74.8	70	80
									E24	18	2	50	83.5	90.4	90	100
									E36	25.5	2	70.8	109.5	116.4	110	125
									E54	40.6	2	112.7	161.9	168.8	175	175
	230	14.6	110	22	3.03	6.8	5.5	20	None	-	-	-	55.8	61.3	70	70
									E18	18	2	43.3	75.1	82	80	90
									E24	24	2	57.7	93.1	100	100	100
									E36	34	2	81.8	123.3	130.1	125	150
									E54	54	2	129.9	150.9	157.8	175	175
	460	7.4	55	12	1.6	3.4	2.2	20	None	-	-	-	28.3	30.5	35	35
									E18	18	2	21.7	37.6	40.4	40	45
									E24	24	2	28.9	46.6	49.4	50	50
									E36	34	2	40.9	61.6	64.4	70	70
									E54	54	2	65	75.5	78.3	80	90
	575	5.6	43	9	1.35	2.4	1.8	20	None	-	-	-	21.7	23.5	25	25
									E18	18	2	17.3	29.6	31.9	30	35
									E24	24	2	23.1	36.9	39.1	40	40
									E36	34	2	32.7	48.9	51.1	50	60
									E54	54	2	52	60	62.3	70	70
150 (12.5)	208	23.1	160	36	3.03	9.6	5.5	20	None	-	-	-	83.7	89.2	100	110
									E18	13.5	2	37.5	83.7	89.2	100	110
									E24	18	2	50	87	93.9	100	110
									E36	25.5	2	70.8	113	119.9	125	125
									E54	40.6	2	112.7	165.4	172.3	175	175
	230	23.1	160	36	3.03	9.6	5.5	20	None	-	-	-	83.7	89.2	100	110
									E18	18	2	43.3	83.7	89.2	100	110
									E24	24	2	57.7	96.6	103.5	100	110
									E36	34	2	81.8	126.8	133.6	150	150
									E54	54	2	129.9	154.4	161.3	175	175
	460	12.2	87	19	1.6	4.7	2.2	20	None	-	-	-	43.6	45.8	50	50
									E18	18	2	21.7	43.6	45.8	50	50
									E24	24	2	28.9	48.3	51	50	60
									E36	34	2	40.9	63.3	66	70	70
									E54	54	2	65	77.1	79.9	90	90
	575	8.7	62	14	1.35	3.6	1.8	20	None	-	-	-	32.6	34.4	40	40
									E18	18	2	17.3	32.6	34.4	40	40
									E24	24	2	23.1	38.4	40.6	40	45
									E36	34	2	32.7	50.4	52.6	60	60
									E54	54	2	52	61.5	63.8	70	70

1. Minimum Circuit Ampacity.
2. Dual Element, Time Delay Type.
3. HACR type per NEC.

ZF078-150 Hi Static Motor - With Powered Convenience Outlet

Size (Tons)	Volt	Compressors (each)			OD Fan Motors (each)	Supply Blower Motor	Pwr Exh Motor	Pwr Conv Outlet	Electric Heat Option				MCA[1] (Amps)	MCA[1] w/Pwr Exh (Amps)	Max Fuse[2]/ Breaker[3] Size (Amps)	Max Fuse[2]/ Breaker[3] Size w/ Pwr Exh (Amps)
		RLA	LRA	MCC	FLA	FLA	FLA	FLA	Model	kW	Stages	Amps				
078 (6)	208	9.8	68	15	2.1	6.8	5.5	20	None	-	-	-	43.1	48.6	50	50
									E09	6.8	1	18.9	44.6	51.5	50	60
									E18	13.5	2	37.5	67.9	74.8	70	80
									E24	18	2	50	83.5	90.4	90	100
									E36	25.5	2	70.8	109.5	116.4	110	125
	230	9.8	68	15	2.1	6.8	5.5	20	None	-	-	-	43.1	48.6	50	50
									E09	9	1	21.7	48.1	55	50	60
									E18	18	2	43.3	75.1	82	80	90
									E24	24	2	57.7	93.1	100	100	100
									E36	34	2	81.8	123.3	130.1	125	150
	460	4.9	34	8	1.26	3.4	2.2	20	None	-	-	-	22	24.2	25	25
									E09	9	1	10.8	24	26.8	25	30
									E18	18	2	21.7	37.6	40.4	40	45
									E24	24	2	28.9	46.6	49.4	50	50
									E36	34	2	40.9	61.6	64.4	70	70
	575	3.8	28	6	0.66	2.4	1.8	20	None	-	-	-	16.3	18.1	20	20
									E09	9	1	8.7	18.9	21.1	20	25
									E18	18	2	17.3	29.6	31.9	30	35
									E24	24	2	23.1	36.9	39.1	40	40
									E36	34	2	32.7	48.9	51.1	50	60
090 (7.5)	208	13.8	83.1	22	2.1	9.6	5.5	20	None	-	-	-	54.9	60.4	60	70
									E09	6.8	1	18.9	54.9	60.4	60	70
									E18	13.5	2	37.5	71.4	78.3	80	80
									E24	18	2	50	87	93.9	90	100
									E36	25.5	2	70.8	113	119.9	125	125
	230	13.8	83.1	22	2.1	9.6	5.5	20	None	-	-	-	54.9	60.4	60	70
									E09	9	1	21.7	54.9	60.4	60	70
									E18	18	2	43.3	78.6	85.5	80	90
									E24	24	2	57.7	96.6	103.5	100	110
									E36	34	2	81.8	126.8	133.6	150	150
	460	6.2	41	10	1.26	4.7	2.2	20	None	-	-	-	26.2	28.4	30	30
									E09	9	1	10.8	26.2	28.4	30	30
									E18	18	2	21.7	39.3	42	40	45
									E24	24	2	28.9	48.3	51	50	60
									E36	34	2	40.9	63.3	66	70	70
	575	4.9	33	8	0.66	3.6	1.8	20	None	-	-	-	19.9	21.7	20	25
									E09	9	1	8.7	20.4	22.6	25	25
									E18	18	2	17.3	31.1	33.4	35	35
									E24	24	2	23.1	38.4	40.6	40	45
									E36	34	2	32.7	50.4	52.6	60	60
102 (8.5)	208	12.2	88	19	3.03	9.6	5.5	20	None	-	-	-	53.2	58.7	60	70
									E09	6.8	1	18.9	53.2	58.7	60	70
									E18	13.5	2	37.5	71.4	78.3	80	80
									E24	18	2	50	87	93.9	90	100
									E36	25.5	2	70.8	113	119.9	125	125
	230	12.2	88	19	3.03	9.6	5.5	20	None	-	-	-	53.2	58.7	60	70
									E09	9	1	21.7	53.2	58.7	60	70
									E18	18	2	43.3	78.6	85.5	80	90
									E24	24	2	57.7	96.6	103.5	100	110
									E36	34	2	81.8	126.8	133.6	150	150
	460	5.8	44	9	1.6	4.7	2.2	20	None	-	-	-	26	28.2	30	30
									E09	9	1	10.8	26	28.4	30	30
									E18	18	2	21.7	39.3	42	40	45
									E24	24	2	28.9	48.3	51	50	60
									E36	34	2	40.9	63.3	66	70	70
	575	4.4	36	6	1.35	3.6	1.8	20	None	-	-	-	20.2	22	25	25
									E09	9	1	8.7	20.4	22.6	25	25
									E18	18	2	17.3	31.1	33.4	35	35
									E24	24	2	23.1	38.4	40.6	40	45
									E36	34	2	32.7	50.4	52.6	60	60

ZF078-150 Hi Static Motor - With Powered Convenience Outlet (Continued)

Size (Tons)	Volt	Compressors (each)			OD Fan Motors (each)	Supply Blower Motor	Pwr Exh Motor	Pwr Conv Outlet	Electric Heat Option				MCA[1] (Amps)	MCA[1] w/Pwr Exh (Amps)	Max Fuse[2]/ Breaker[3] Size (Amps)	Max Fuse[2]/ Breaker[3] Size w/ Pwr Exh (Amps)
		RLA	LRA	MCC	FLA	FLA	FLA	FLA	Model	kW	Stages	Amps				
120 (10)	208	14.6	110	22	3.03	9.6	5.5	20	None	-	-	-	58.6	64.1	70	70
									E18	13.5	2	37.5	71.4	78.3	80	80
									E24	18	2	50	87	93.9	90	100
									E36	25.5	2	70.8	113	119.9	125	125
									E54	40.6	2	112.7	165.4	172.3	175	175
	230	14.6	110	22	3.03	9.6	5.5	20	None	-	-	-	58.6	64.1	70	70
									E18	18	2	43.3	78.6	85.5	80	90
									E24	24	2	57.7	96.6	103.5	100	110
									E36	34	2	81.8	126.8	133.6	150	150
									E54	54	2	129.9	154.4	161.3	175	175
	460	7.4	55	12	1.6	4.7	2.2	20	None	-	-	-	29.6	31.8	35	35
									E18	18	2	21.7	39.3	42	40	45
									E24	24	2	28.9	48.3	51	50	60
									E36	34	2	40.9	63.3	66	70	70
									E54	54	2	65	77.1	79.9	90	90
	575	5.6	43	9	1.35	3.6	1.8	20	None	-	-	-	22.9	24.7	25	30
									E18	18	2	17.3	31.1	33.4	35	35
									E24	24	2	23.1	38.4	40.6	40	45
									E36	34	2	32.7	50.4	52.6	60	60
									E54	54	2	52	61.5	63.8	70	70
150 (12.5)	208	23.1	160	36	3.03	14	5.5	20	None	-	-	-	88.1	93.6	110	110
									E18	13.5	2	37.5	88.1	93.6	110	110
									E24	18	2	50	92.5	99.4	110	110
									E36	25.5	2	70.8	118.5	125.4	125	150
									E54	40.6	2	112.7	170.9	177.8	175	200
	230	23.1	160	36	3.03	14	5.5	20	None	-	-	-	88.1	93.6	110	110
									E18	18	2	43.3	88.1	93.6	110	110
									E24	24	2	57.7	102.1	109	110	110
									E36	34	2	81.8	132.3	139.1	150	150
									E54	54	2	129.9	159.9	166.8	175	175
	460	12.2	87	19	1.6	6.6	2.2	20	None	-	-	-	45.5	47.7	50	50
									E18	18	2	21.7	45.5	47.7	50	50
									E24	24	2	28.9	50.6	53.4	60	60
									E36	34	2	40.9	65.6	68.4	70	70
									E54	54	2	65	79.5	82.3	90	90
	575	8.7	62	14	1.35	5.2	1.8	20	None	-	-	-	34.2	36	40	40
									E18	18	2	17.3	34.2	36	40	40
									E24	24	2	23.1	40.4	42.6	45	45
									E36	34	2	32.7	52.4	54.6	60	60
									E54	54	2	52	63.5	65.8	70	70

1. Minimum Circuit Ampacity.
2. Dual Element, Time Delay Type.
3. HACR type per NEC.

Typical Wiring Diagrams

ZF078-150 Typical Wiring Diagrams

Typical ZF078-120 Cooling Unit with Gas Heat 208/230 Volt Wiring Diagram

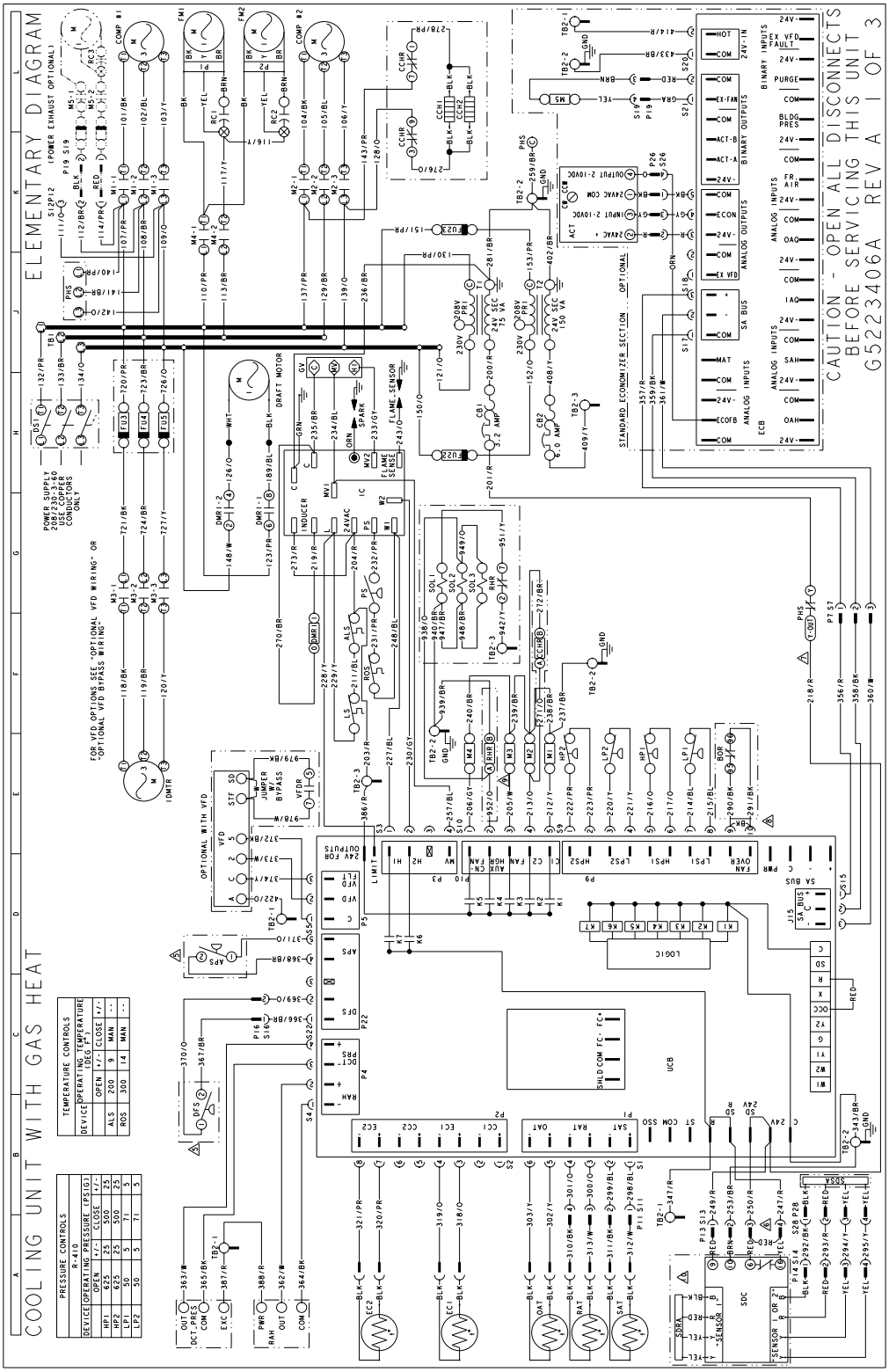

DEVICE	OPERATING PRESSURE (PSIG)			
	OPEN	+/-	CLOSE	+/-
HP1	625	25	500	25
HP2	625	25	500	25
LP1	50	5	71	5
LP2	50	5	71	5

DEVICE	OPERATING TEMPERATURE (DEG F)			
	OPEN	+/-	CLOSE	+/-
ALS	200	9	MAN	--
ROS	300	14	MAN	--

Typical ZF078-120 Cooling Unit with Gas Heat 208/230 Volt Unit (Options)

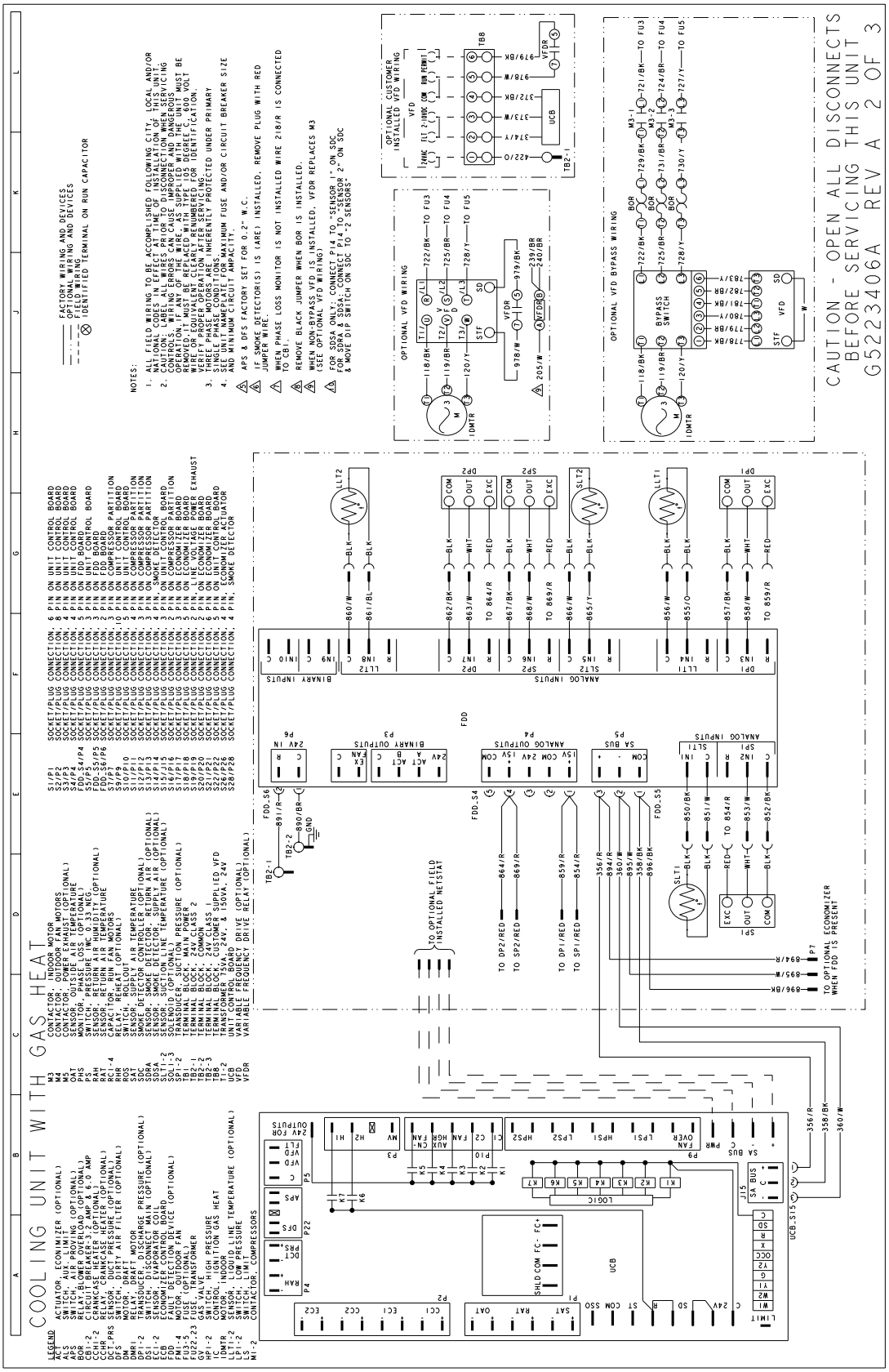

Typical ZF078-120 Cooling Unit with Gas Heat 460/575 Volt Wiring Diagram

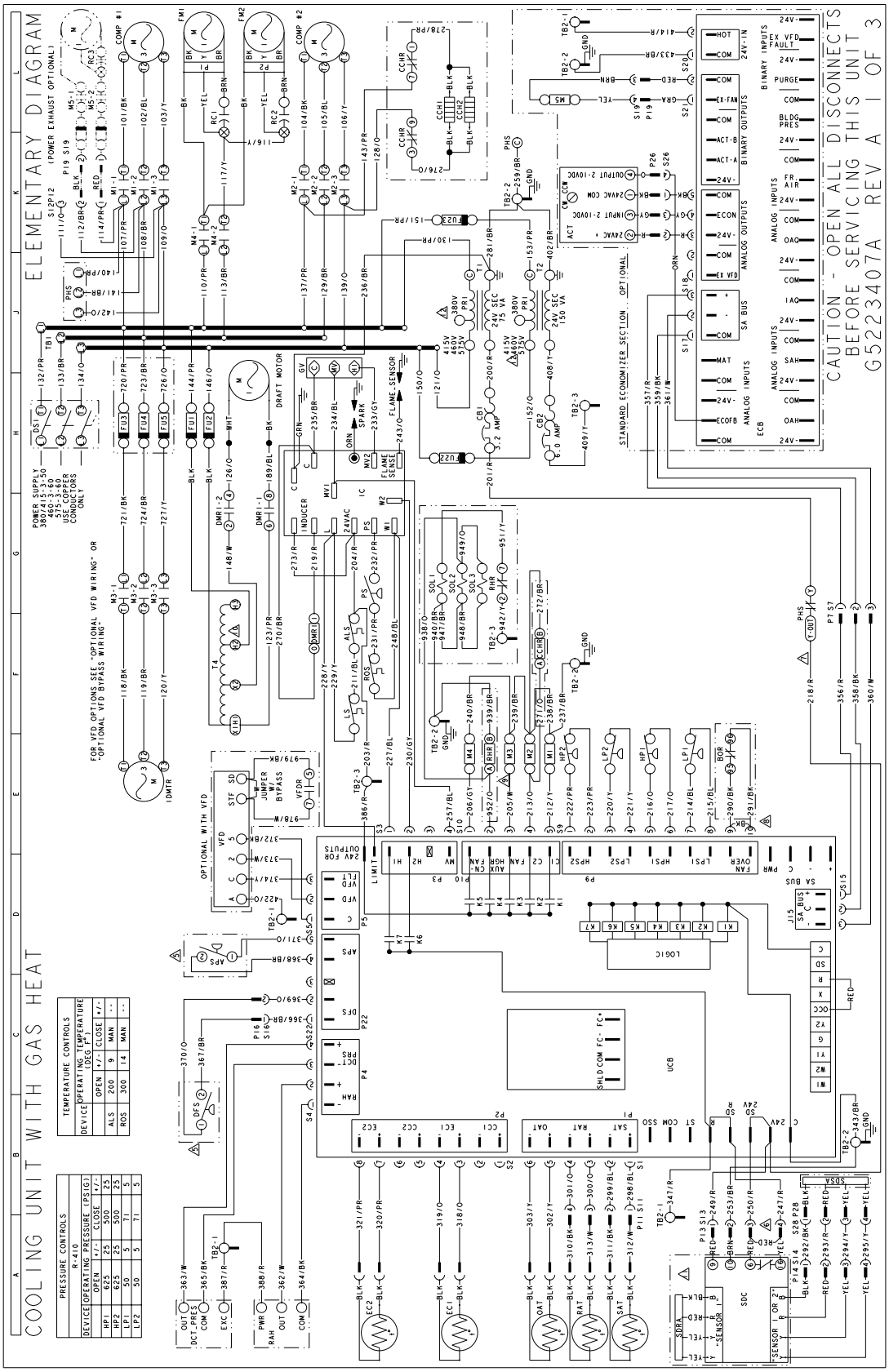

Typical ZF078-120 Cooling Unit with Gas Heat 460/575 Volt Unit (Options)

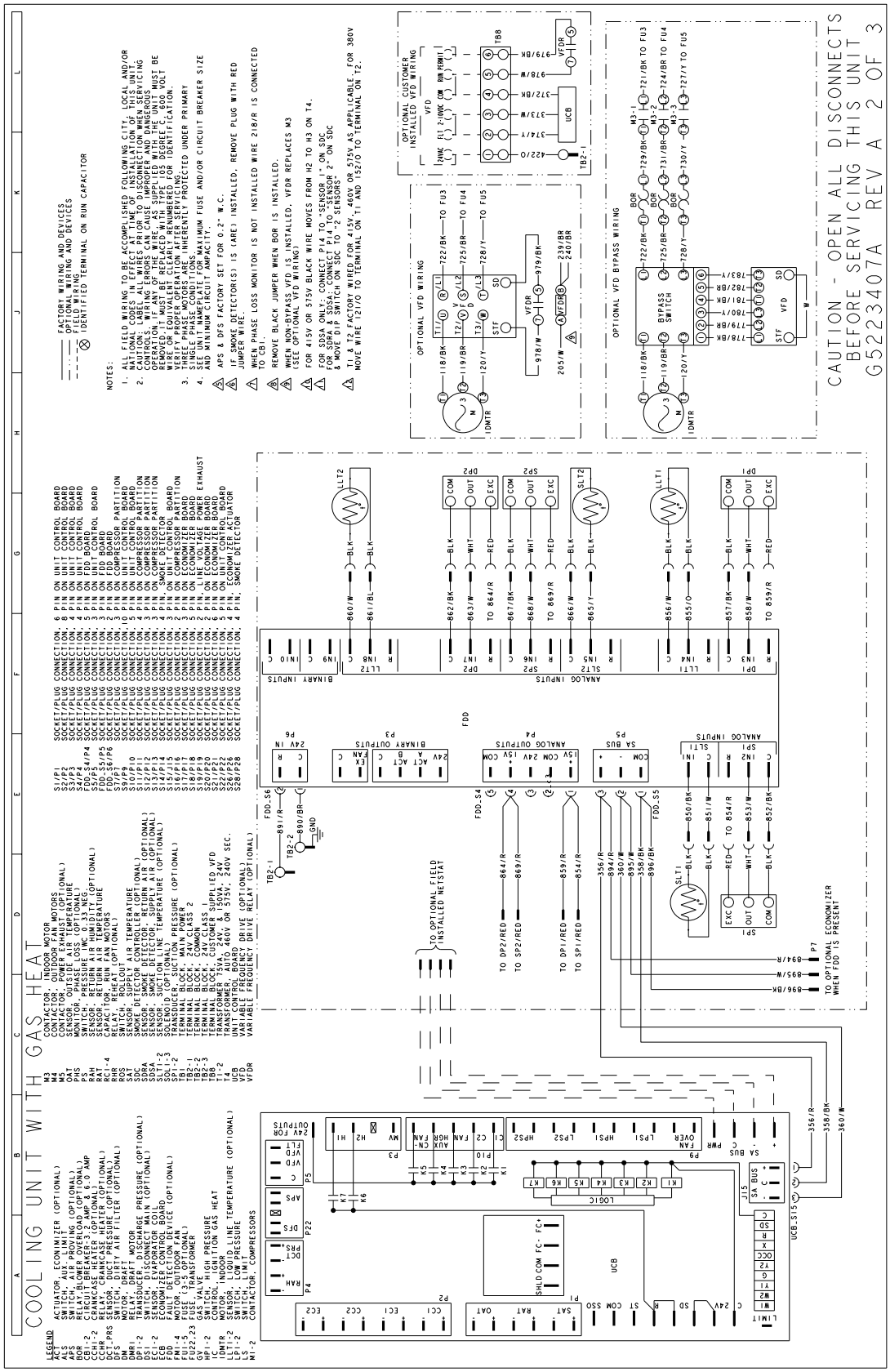

Typical ZF078-120 Cooling Unit with/without Electric Heat Wiring Diagram

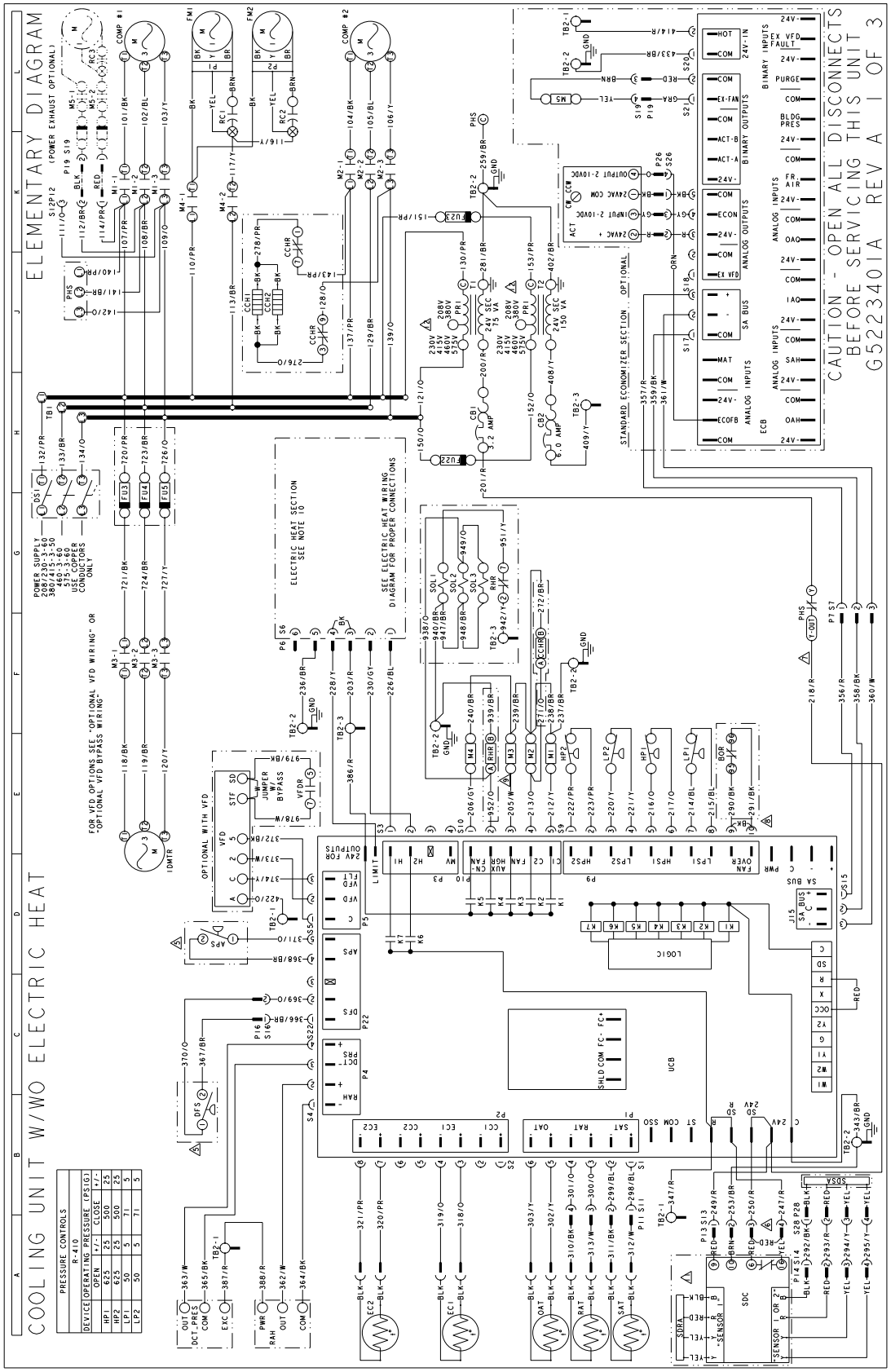

Typical ZF78-120 Cooling Unit with/without Electric Heat Unit (Options)

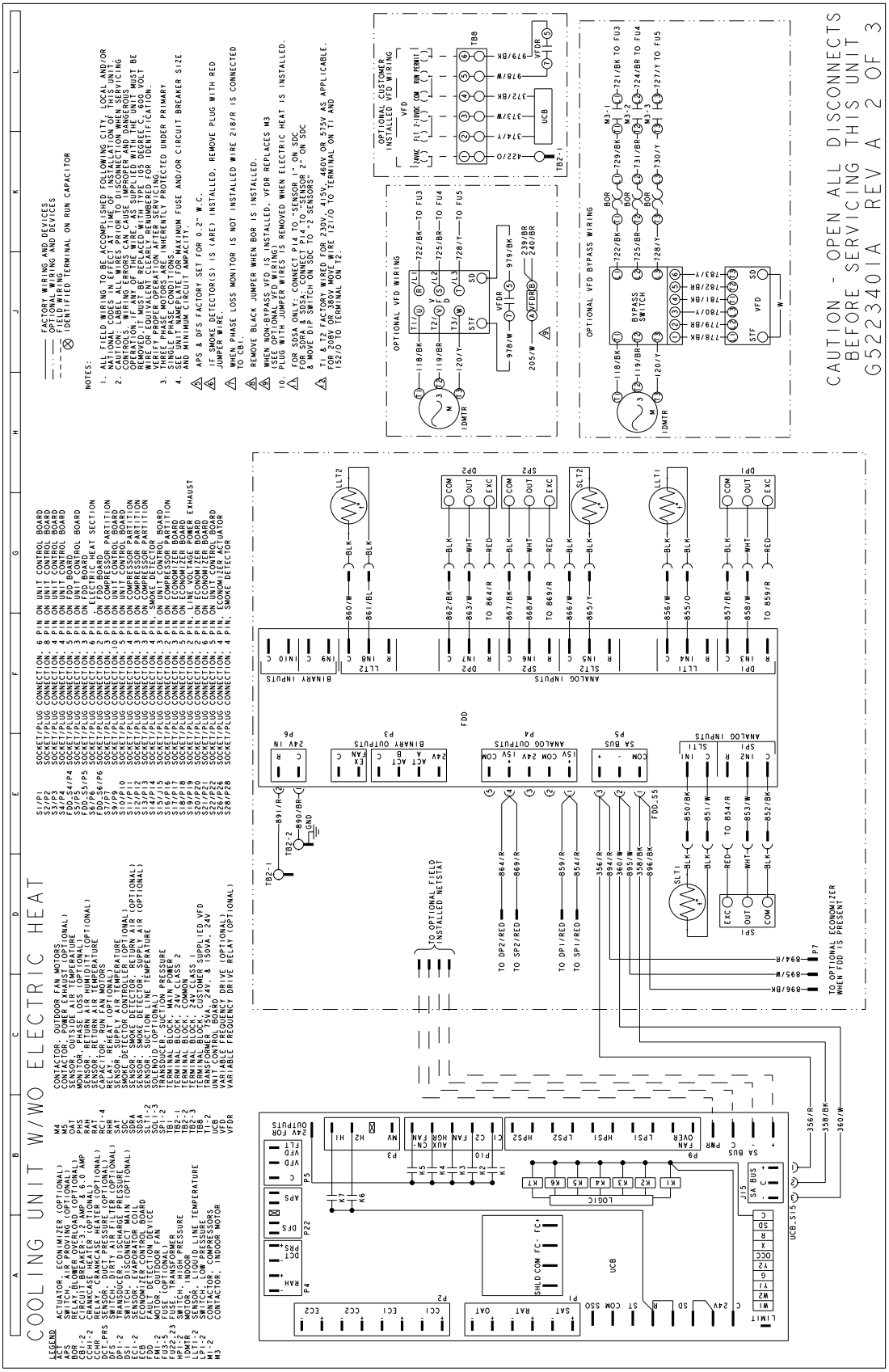

Typical ZF150 Cooling Unit with Gas Heat 208/230 Volt Wiring Diagram

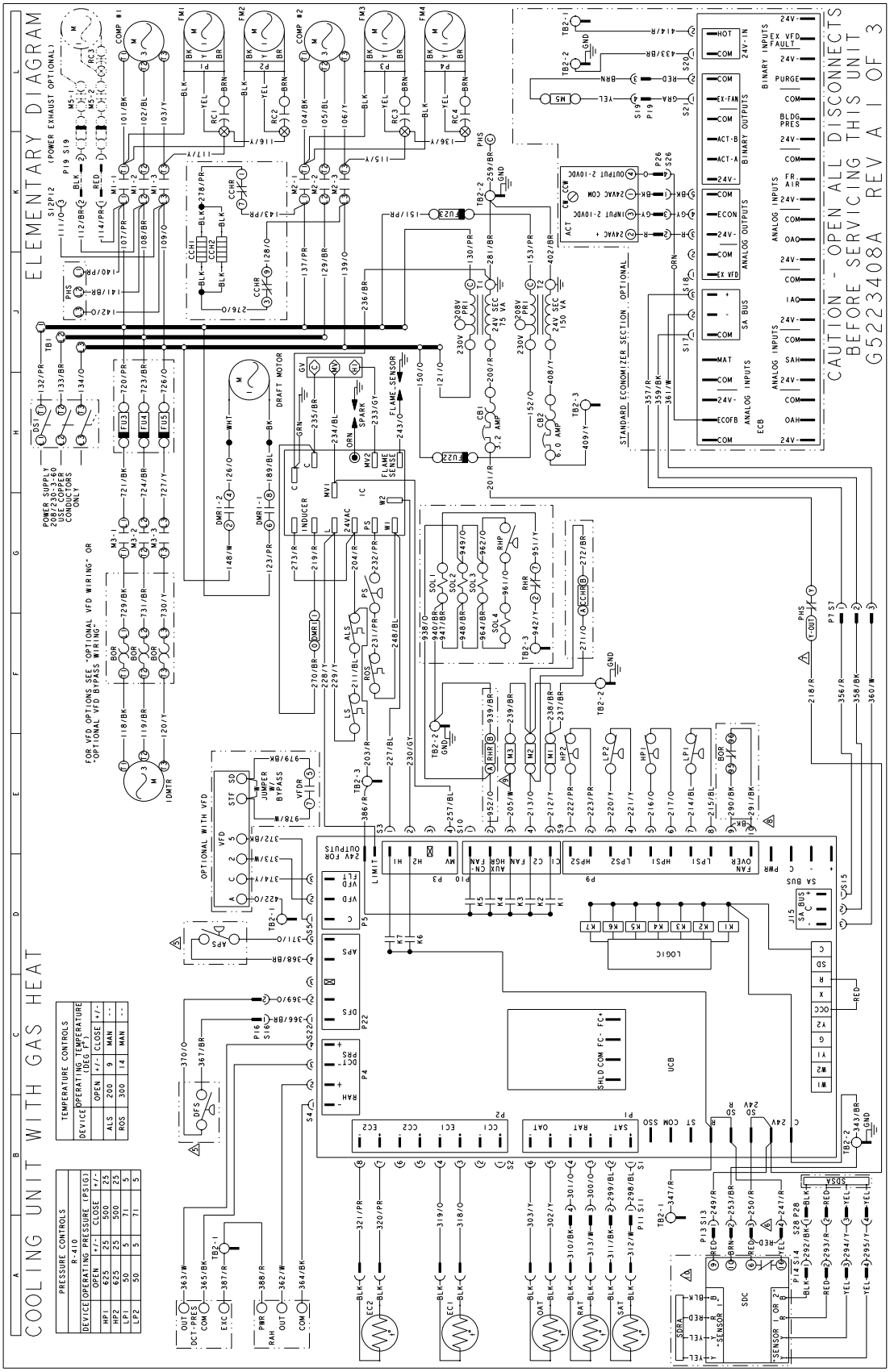

Typical ZF150 Cooling Unit with Gas Heat 208/230 Volt Unit (Options)

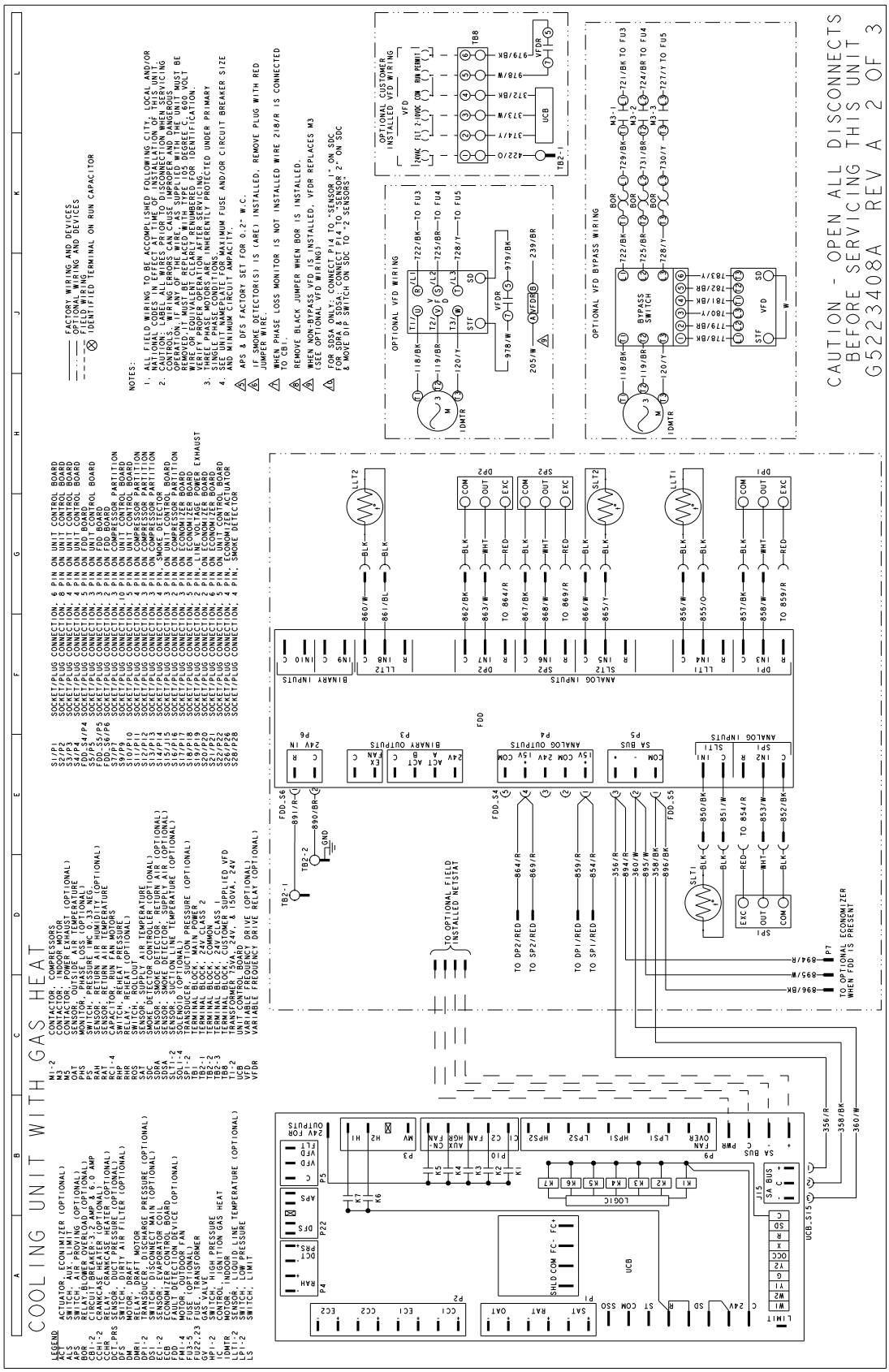

Typical ZF150 Cooling Unit with Gas Heat 460/575 Volt Wiring Diagram

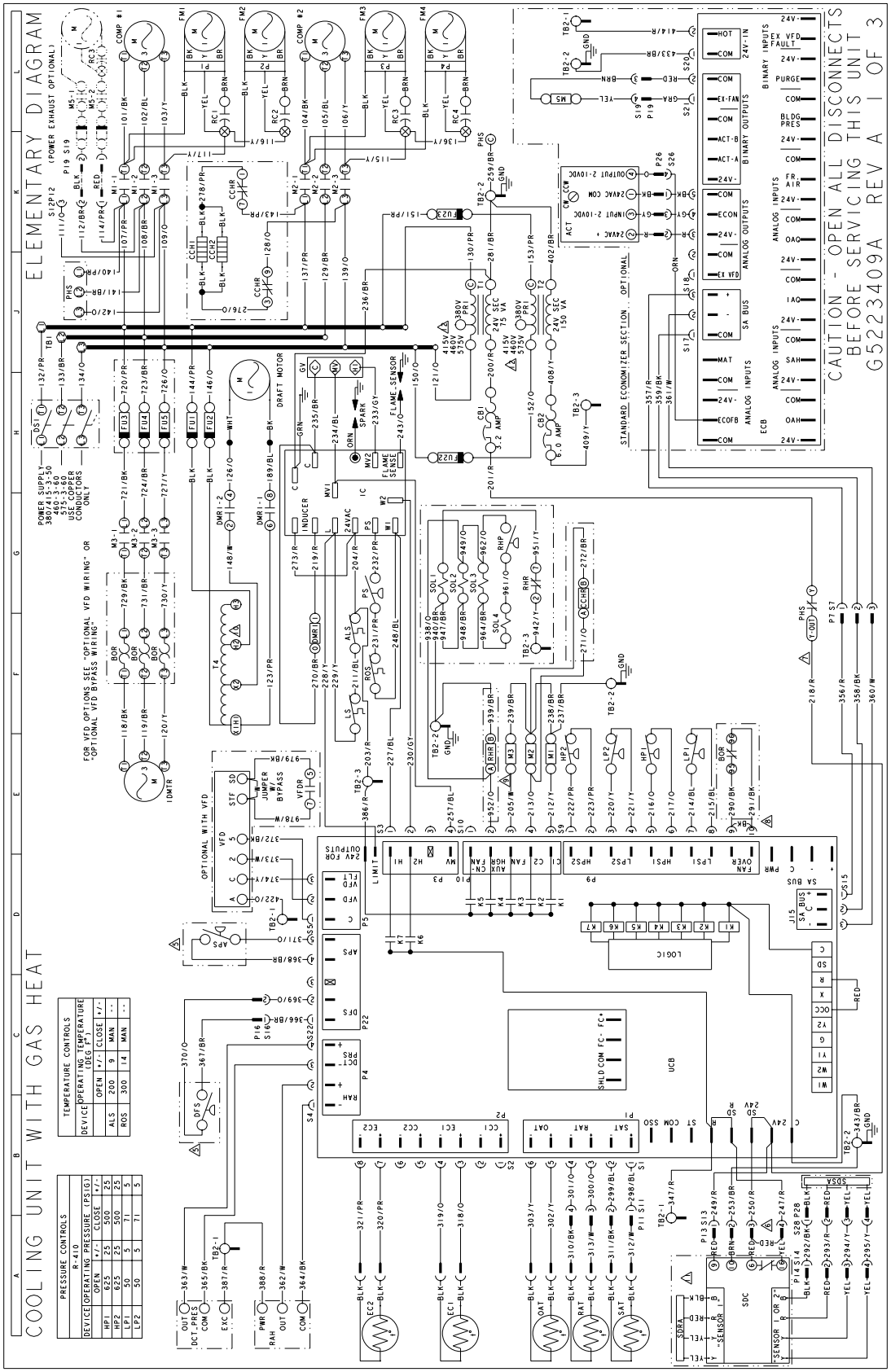

Typical ZF150 Cooling Unit with Gas Heat 460/575 Volt Unit (Options)

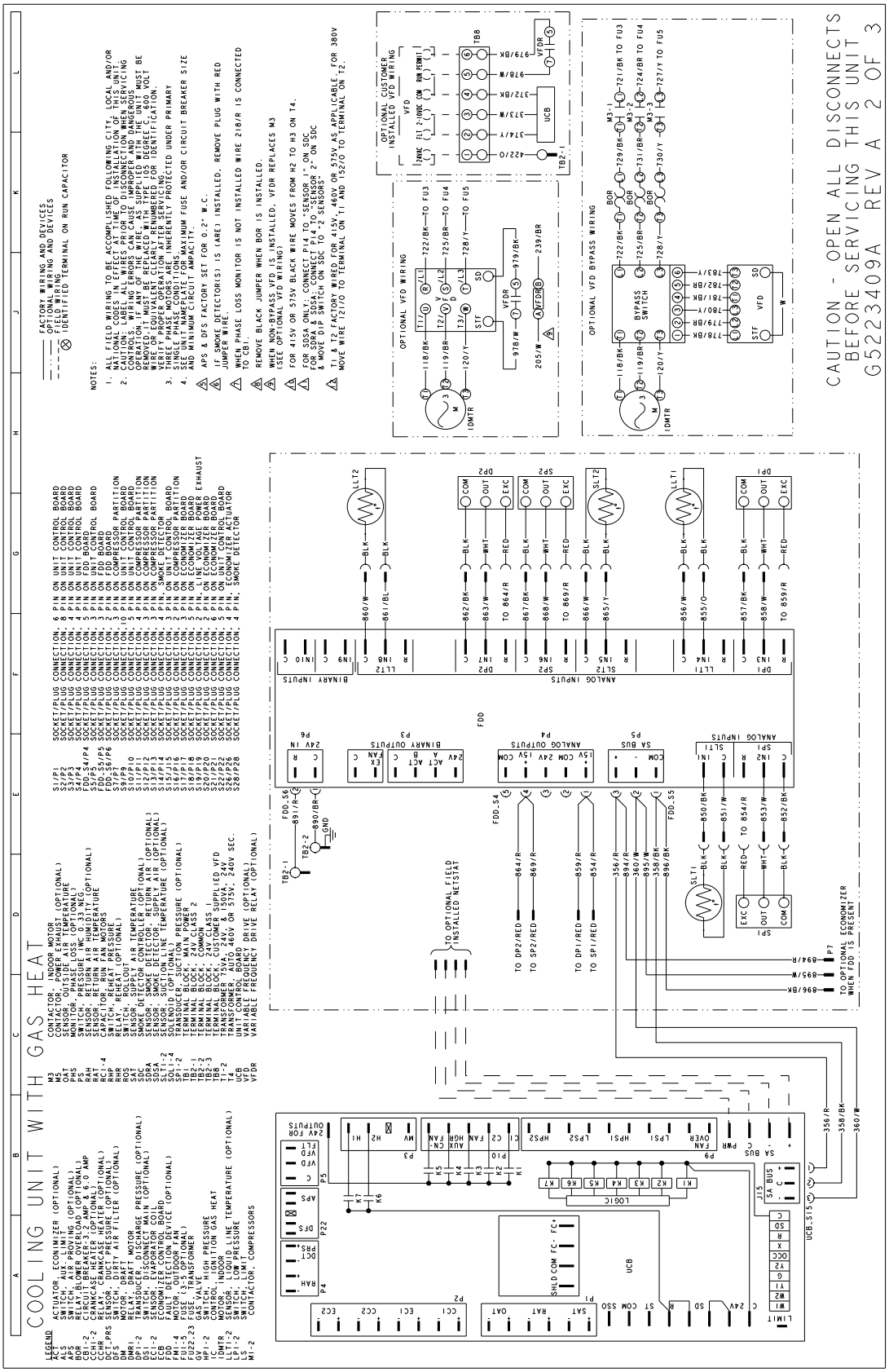

Typical ZF150 Cooling Unit with/without Electric Heat Wiring Diagram

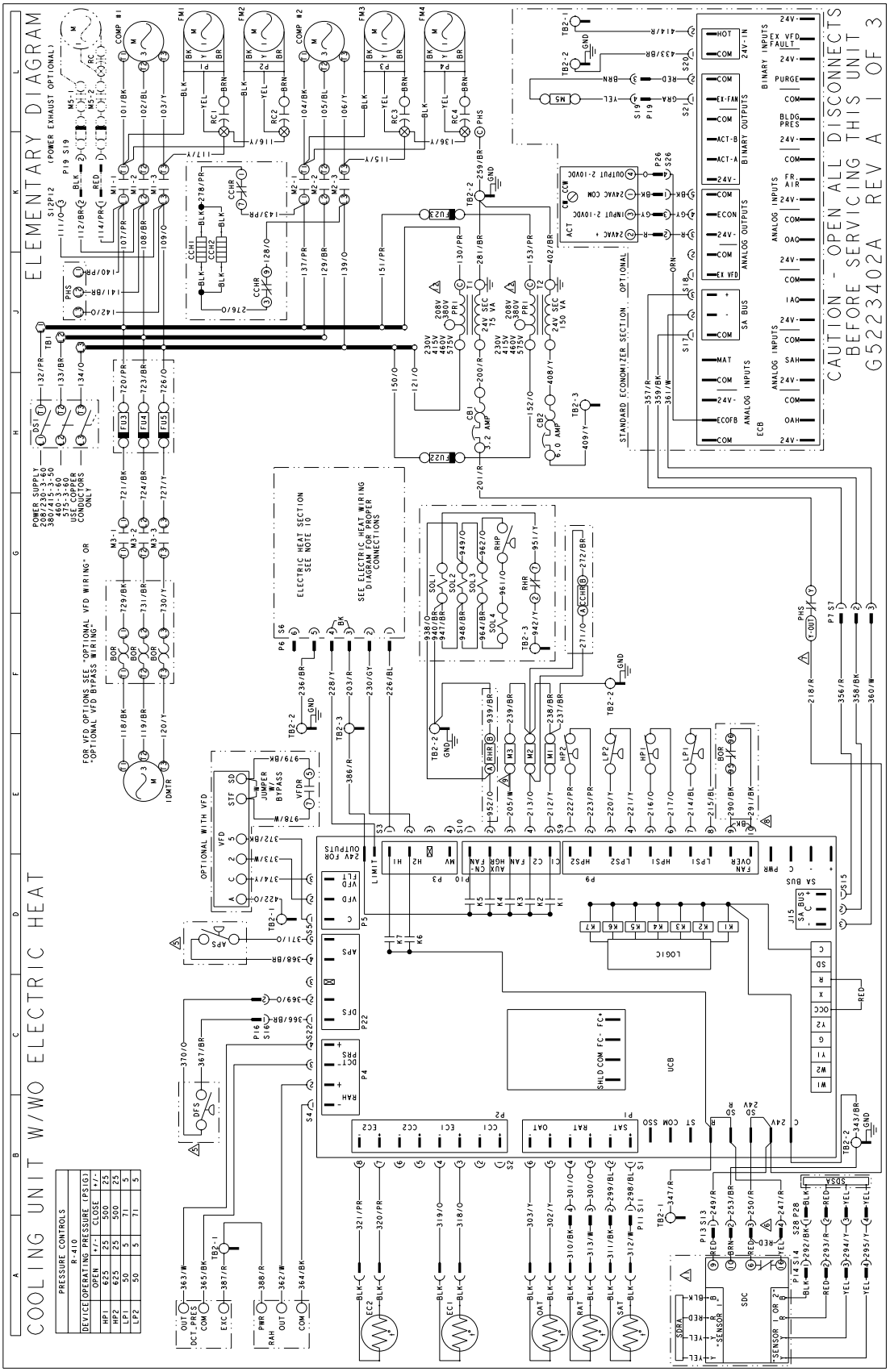

Typical ZF150 Cooling Unit with/without Electric Heat Unit (Options)

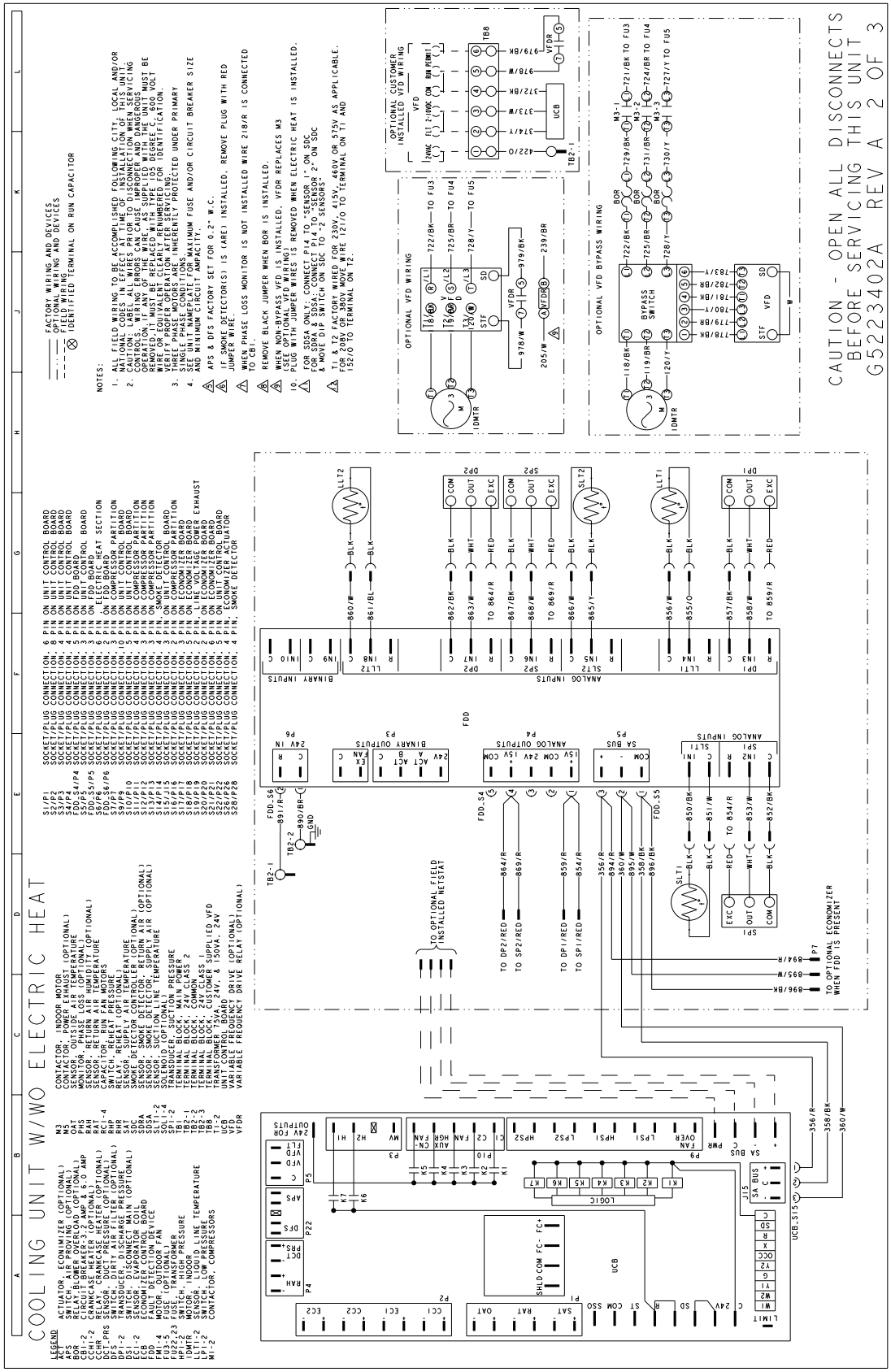

BAS Controls Typical Wiring Diagrams

Typical SURVEYOR BAS Control Wiring Diagram

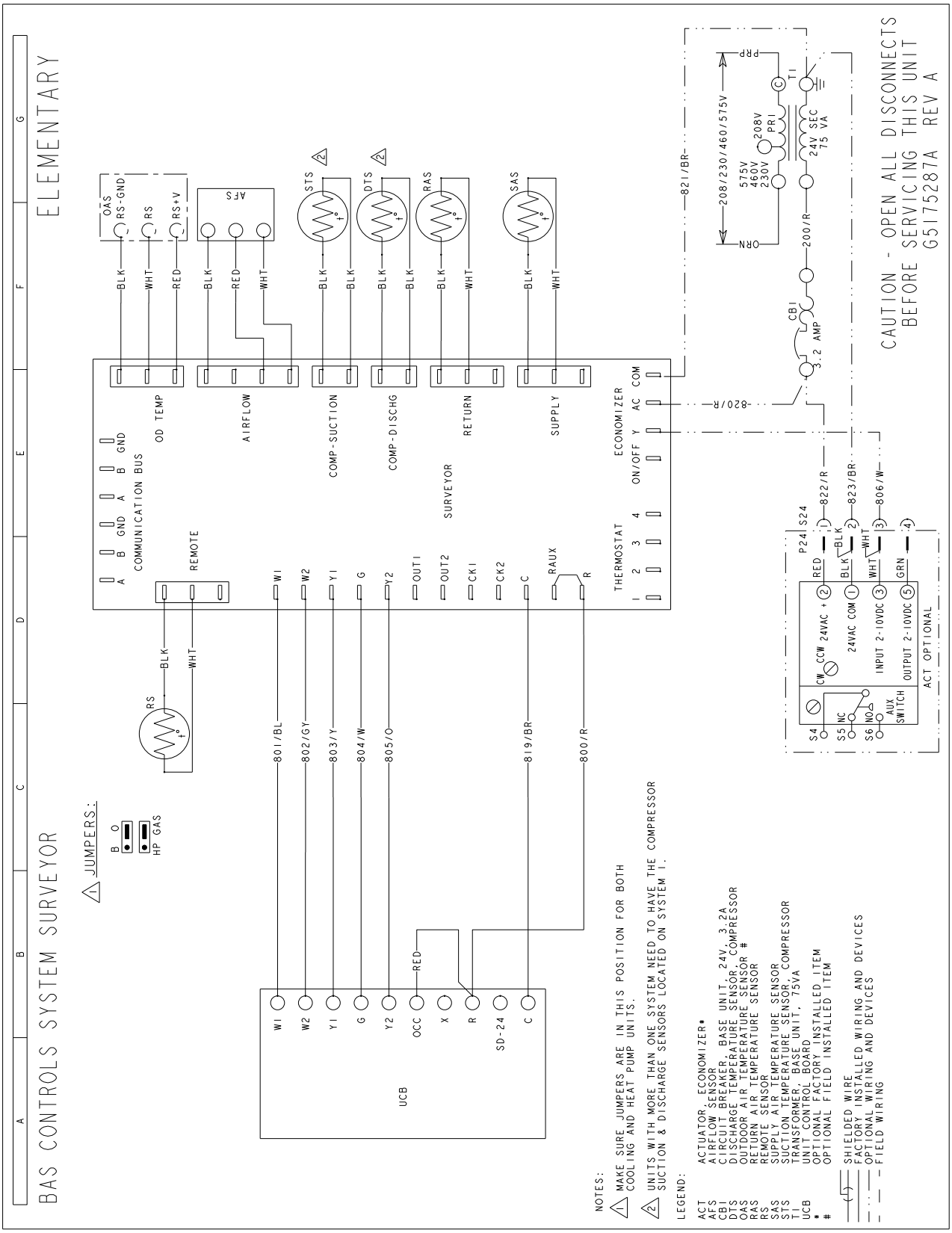

Typical CPC BAS Control Wiring Diagram

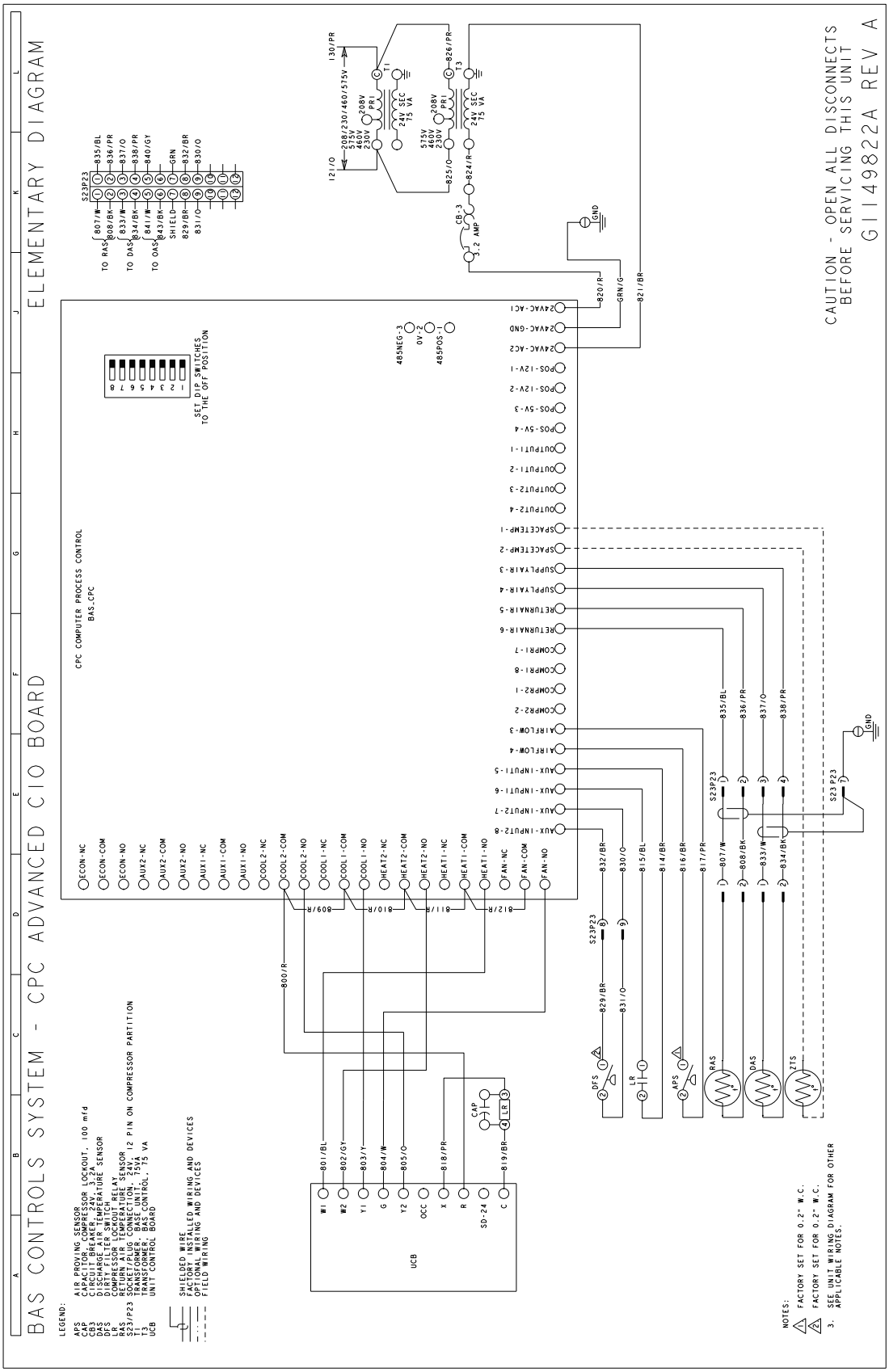

Typical HONEYWELL BAS Control Wiring Diagram

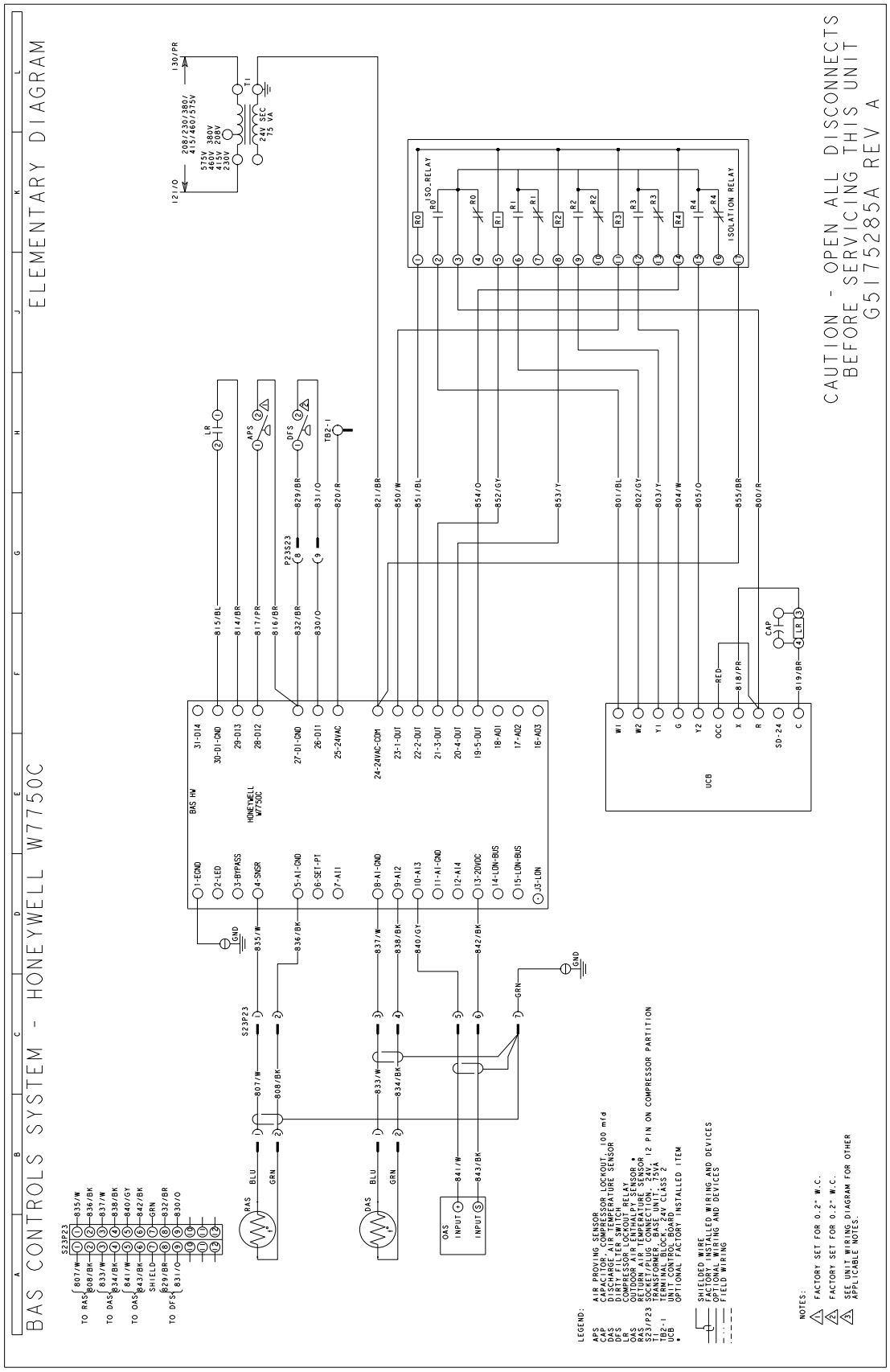

Typical NOVAR BAS Control Wiring Diagram

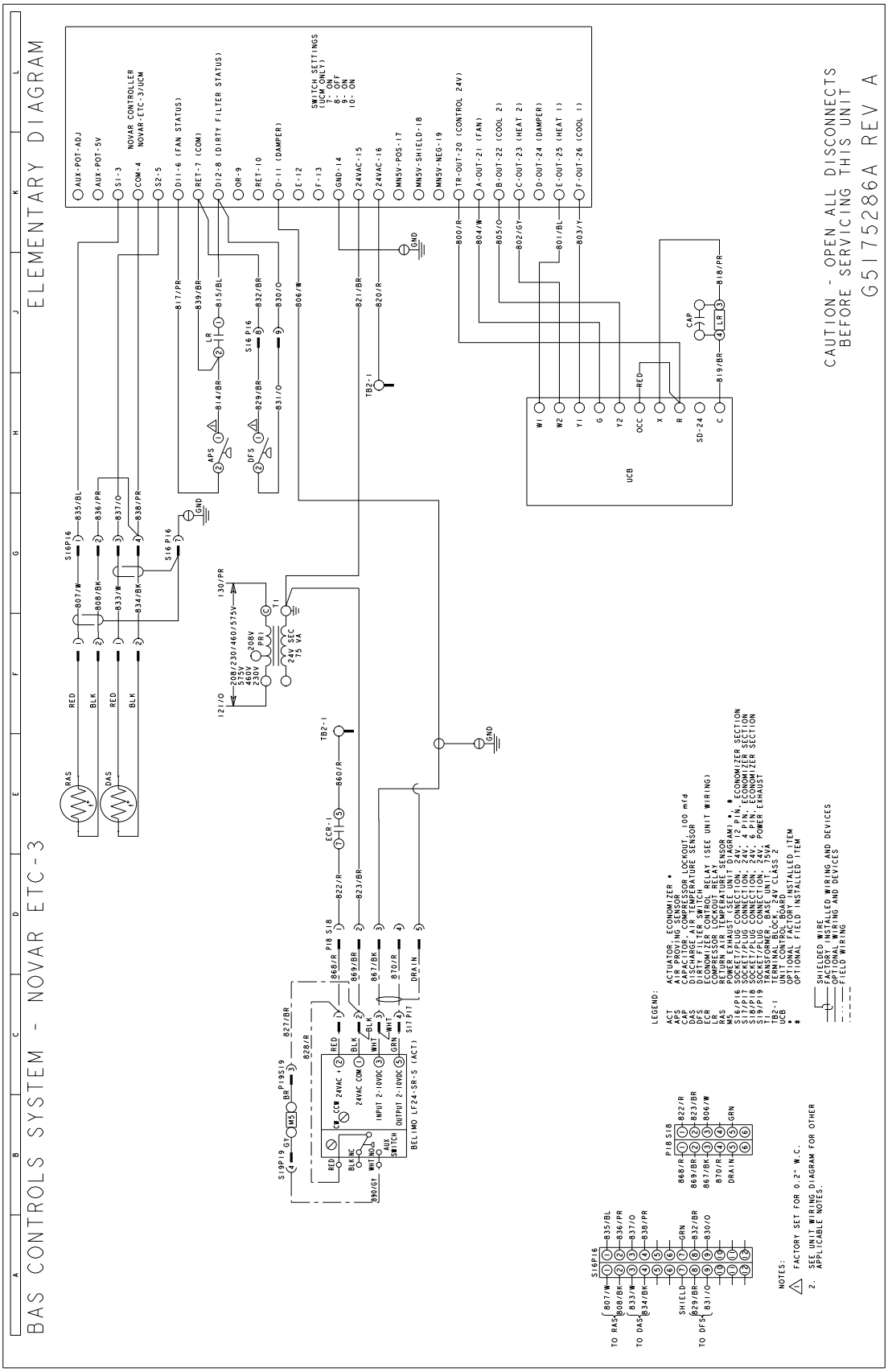

Weights and Dimensions

ZF078-150 Unit Weights

Unit 4 Point Load Weight

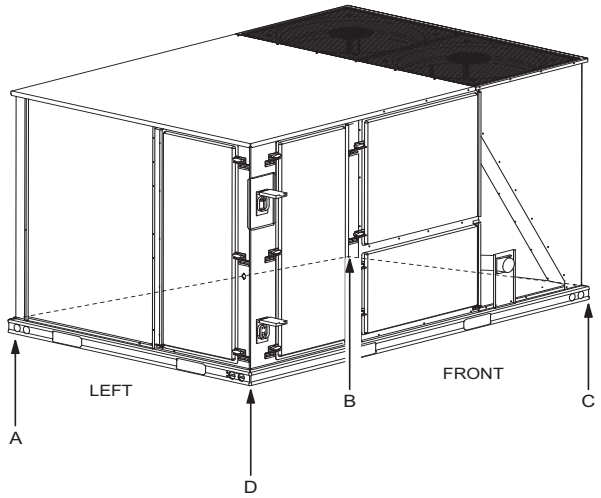

Unit 6 Point Load Weight

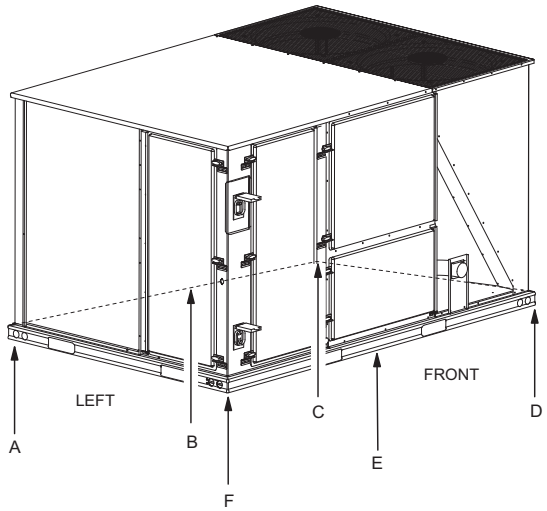

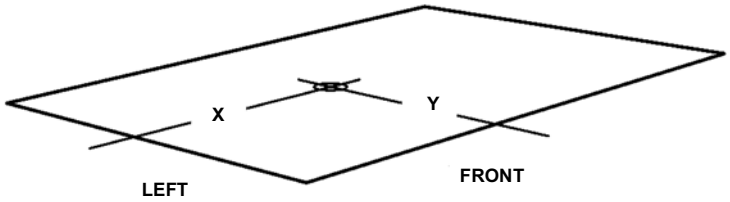

Size (Tons)	Model	Weight (lbs.)		Center of Gravity		4 Point Load Location (lbs.)				6 Point Load Location (lbs.)					
		Shipping	Operating	X	Y	A	B	C	D	A	B	C	D	E	F
078 (6.5)	ZF	865	860	38	24	200	149	218	292	140	114	95	138	167	205
090 (7.5)	ZF	885	860	38	24	205	153	223	299	144	117	97	142	171	210
102 (8.5)	ZF	1012	1007	38	24	235	175	255	342	164	134	111	162	195	240
120 (10)	ZF	1065	1060	38	24	247	184	268	360	173	141	117	171	206	253
150 (12.5)	ZF	1258	1253	47	25	251	280	381	341	164	176	190	259	240	223

ZF078-150 Unit Accessory Weights

Unit Accessory	Weight (lbs.)	
	Shipping	Operating
Economizer	90	85
Power Exhaust	40	35
Electric Heat[1]	49	49
Gas Heat[2]	110	110
Variable Frequency Drive[3]	30	30

1. Weight given is for the maximum heater size available (54KW).
2. Weight given is for the maximum number of tube heat exchangers available (8 tube).
3. Weight includes mounting hardware, controls and manual bypass option (ZF Only).

ZF078-150 Unit Dimensions

ZF078 - 120

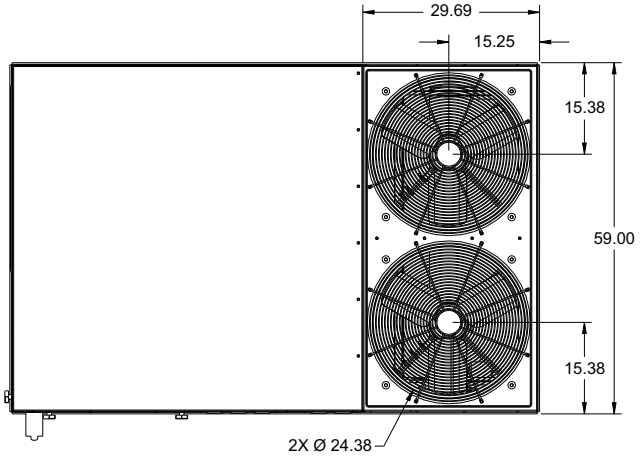

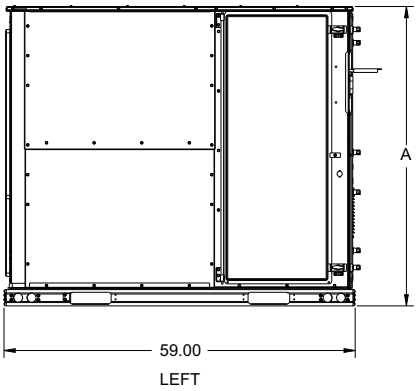

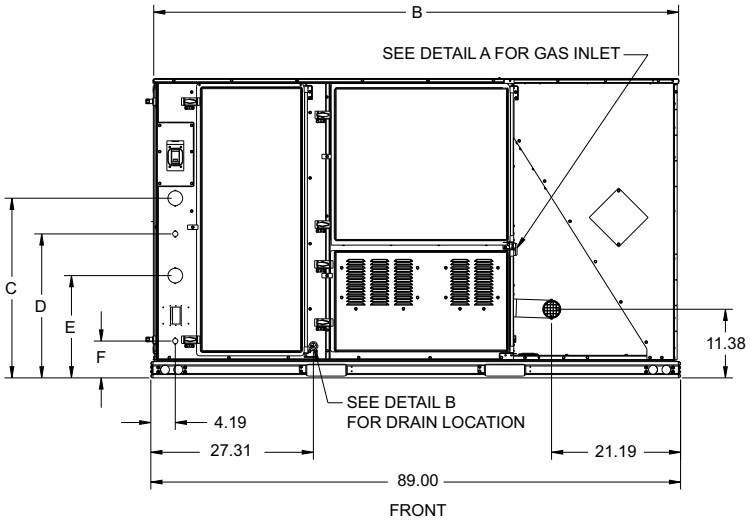

ZF150

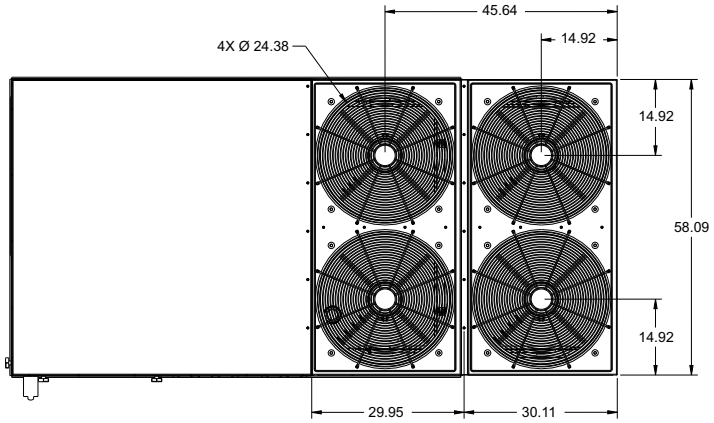

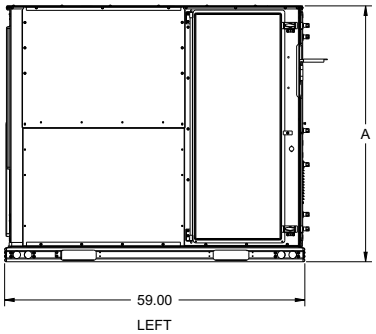

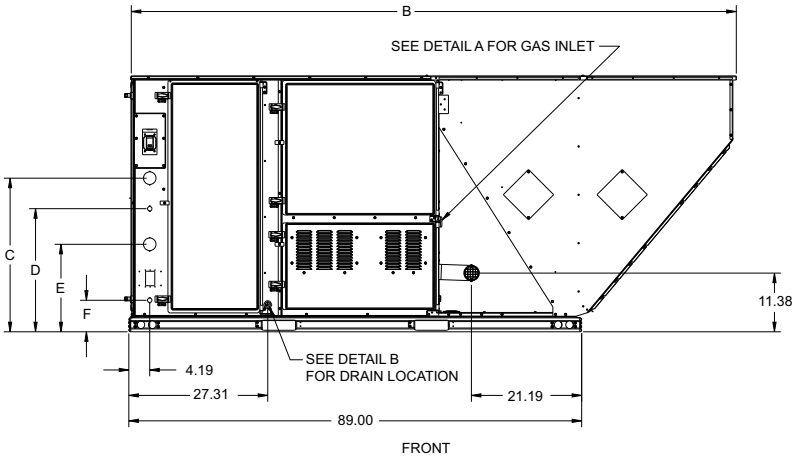

ZF078-150 Unit Physical Dimensions

Unit Model Number	Dimension (in.)					
	A	B	C	D	E	F
078	42	89	22 1/8	18 3/16	15 3/16	6 3/16
090	42	89	22 1/8	18 3/16	15 3/16	6 3/16
102	50 3/4	89	30 3/16	24 3/16	17 3/16	6 3/16
120	50 3/4	89	30 3/16	24 3/16	17 3/16	6 3/16
150	50 3/4	119 1/2	30 3/16	24 3/16	17 3/16	6 3/16

Detail A

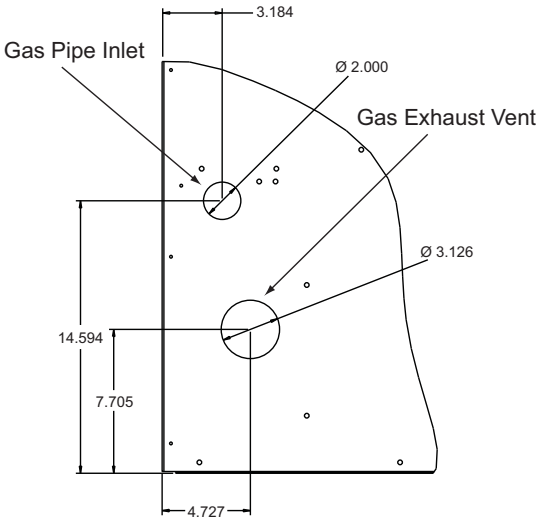

42” CABINET

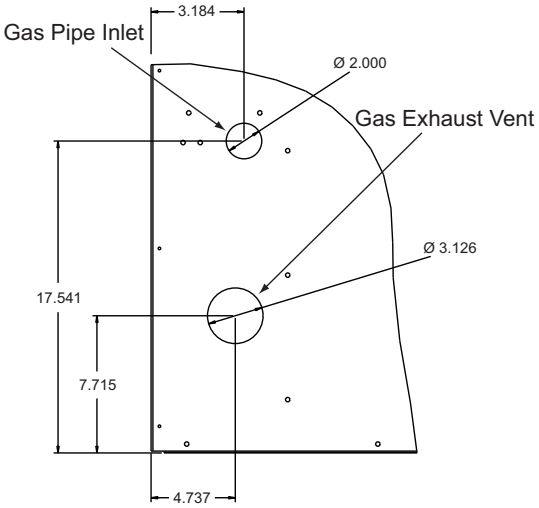

50 3/4” CABINET

Detail B

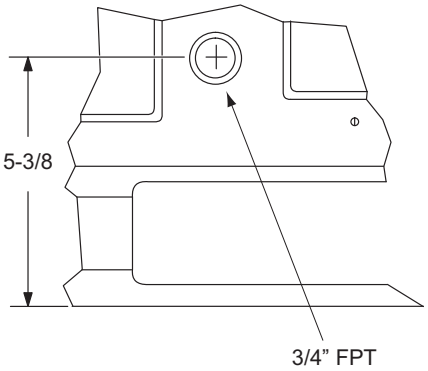

ZF078-150 Unit Clearances

Direction	Distance (in.)	Direction	Distance (in.)
Top[1]	72	Right	12
Front	36	Left	36
Rear	36	Bottom[2]	0

1. Units must be installed outdoors. Over hanging structure or shrubs should not obscure condenser air discharge outlet.
2. Units may be installed on combustible floors made from wood or class A, B or C roof covering materials.

ZF078-150 Unit Bottom Duct Opening

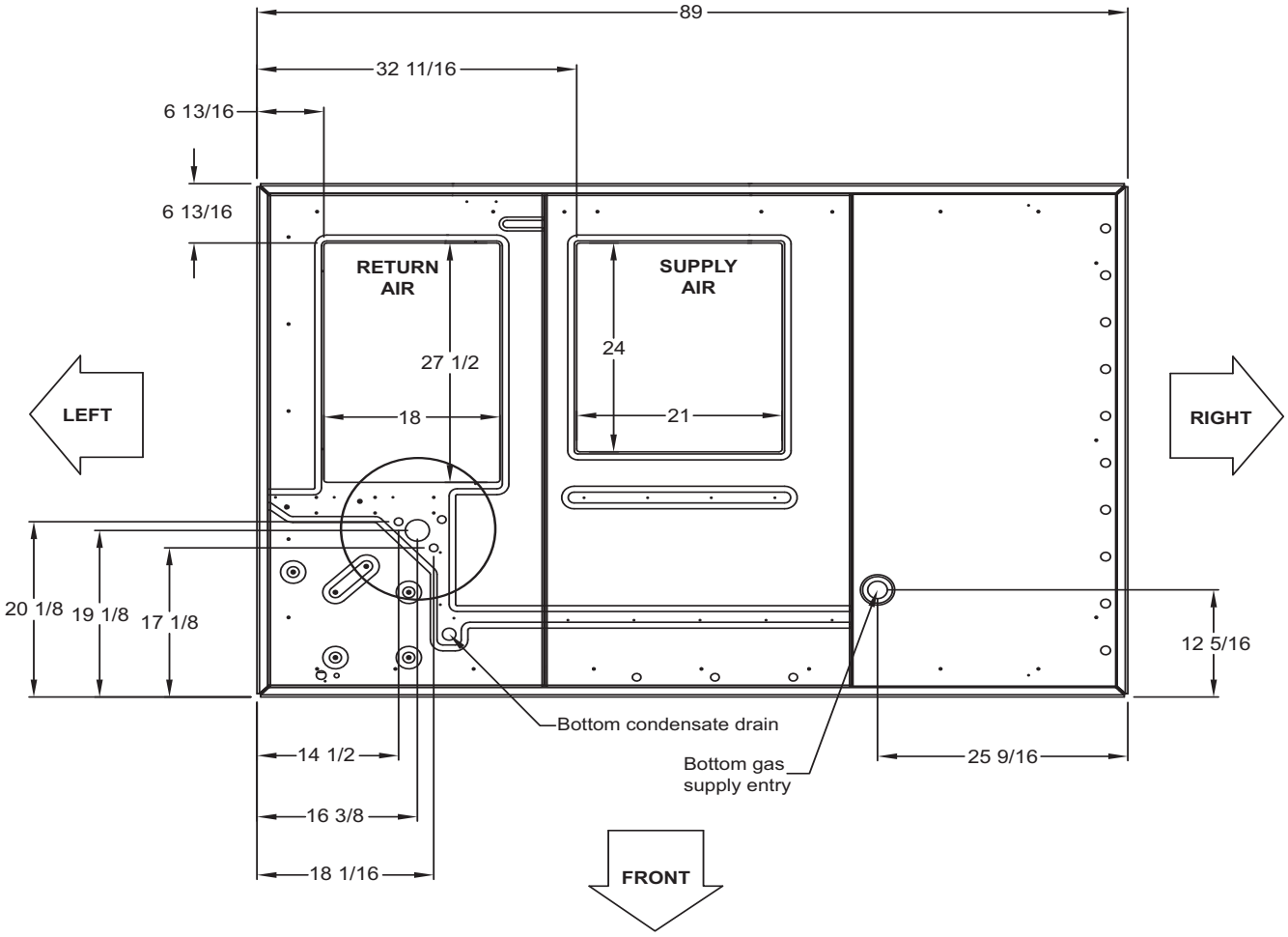

TOP VIEW

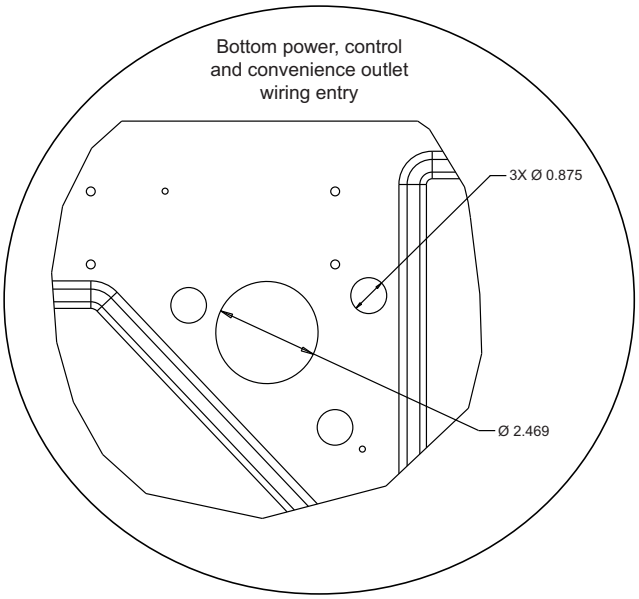

ZF078-150 Unit Electrical Entry

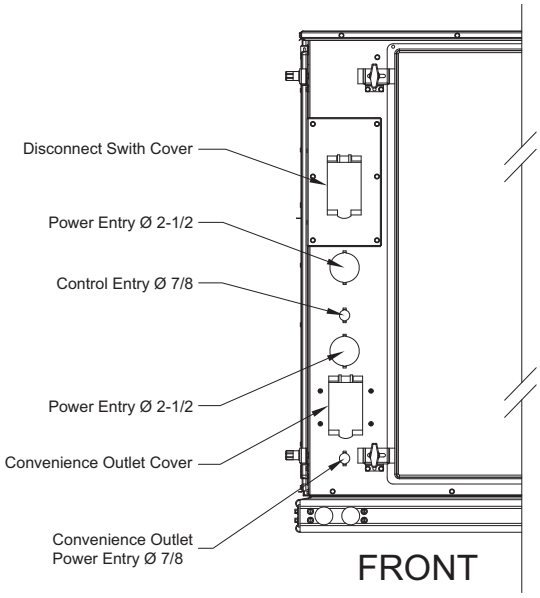

ZF078-120 Unit Side Duct Openings

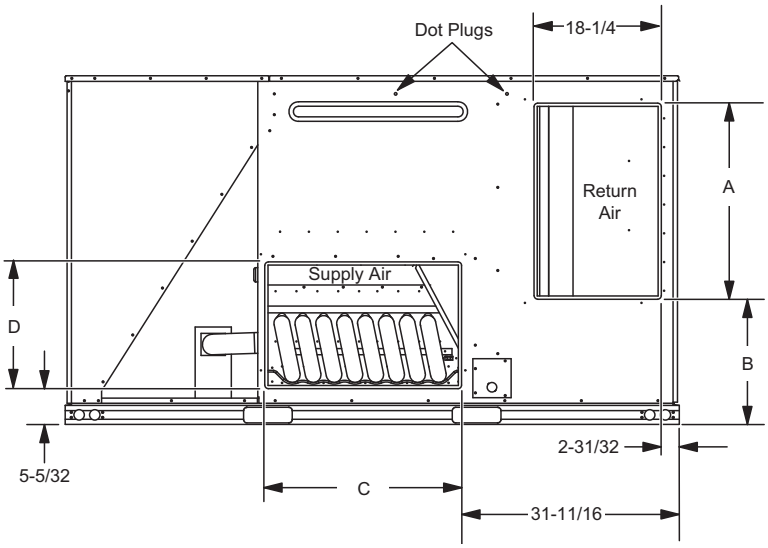

ZF150 Unit Side Duct Openings

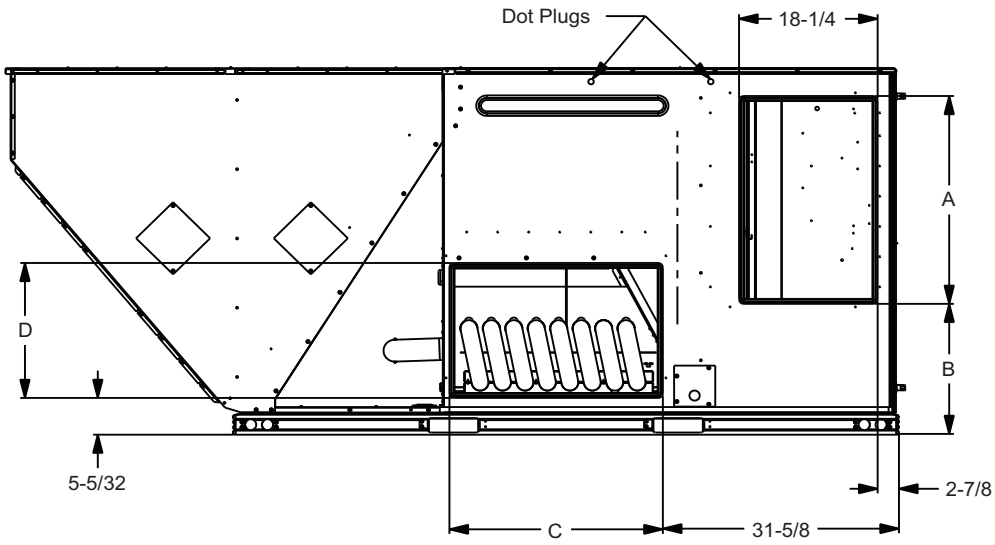

ZF Side Duct Dimensions

Unit Model Number	Dimension (in.)			
	A	B	C	D
078	27 3/4	12 1/16	27 1/2	16
090	27 3/4	12 1/16	27 1/2	16
102	28 1/4	18 1/16	28 1/4	18 1/4
120	28 1/4	18 1/16	28 1/4	18 1/4
150	28 1/4	18 1/16	28 1/4	18 1/4

ZF078-150 Unit Left Duct Opening

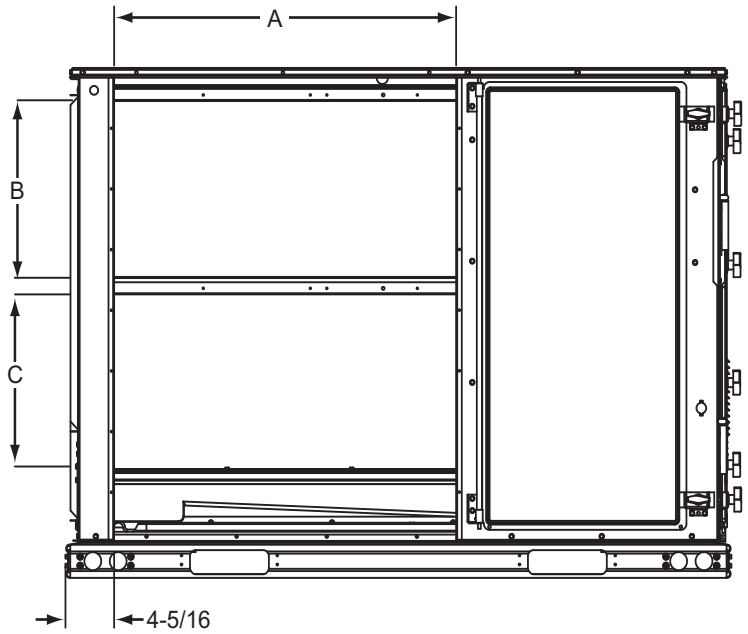

ZF078-150 Unit Accessory Dimensions

ZF078-150 Roof Curb

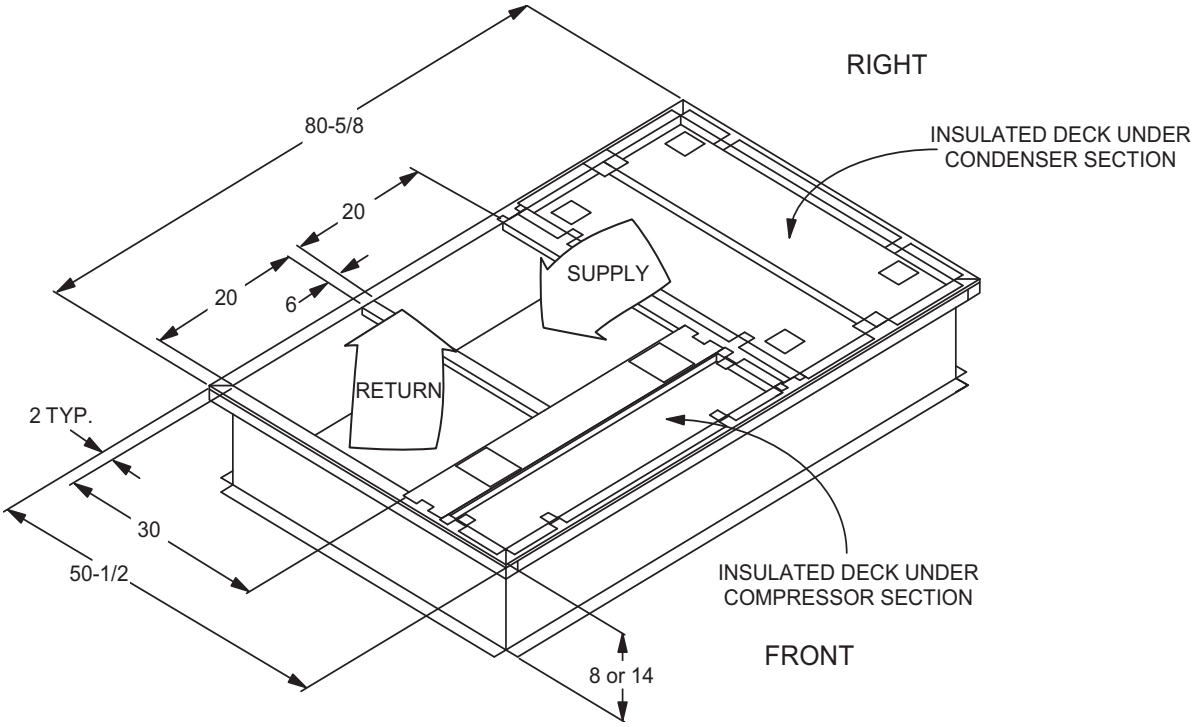

ZF078-150 Transition Roof Curb

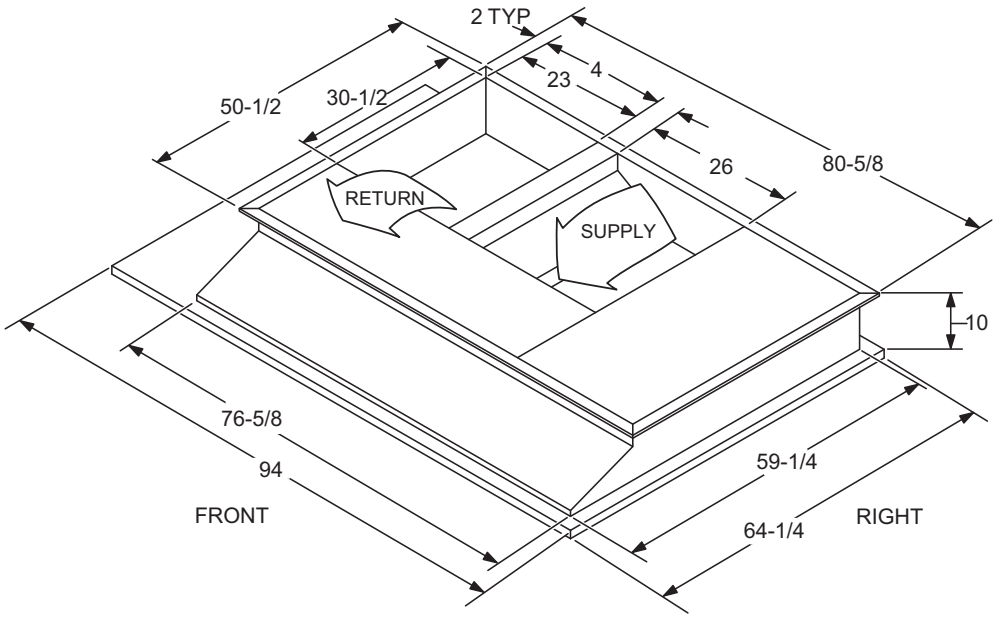

Economizer Options

Economizer Usage

Application	Cabinet Height	Description	Model
Side Return	All	Horizontal economizer without barometric relief	2EE04706924[1]
Downflow, End Return Horizontal or ERV	42"	Economizer, 42” tall cabinet	2EE04707424[2]
	50"	Economizer, 50” tall cabinet	2EE04707624[2]

1. Barometric relief must be ordered separately and installed in duct work.
2. Includes fresh air hood, exhaust hood and barometric relief.

Economizer Downflow W/Power Exhaust

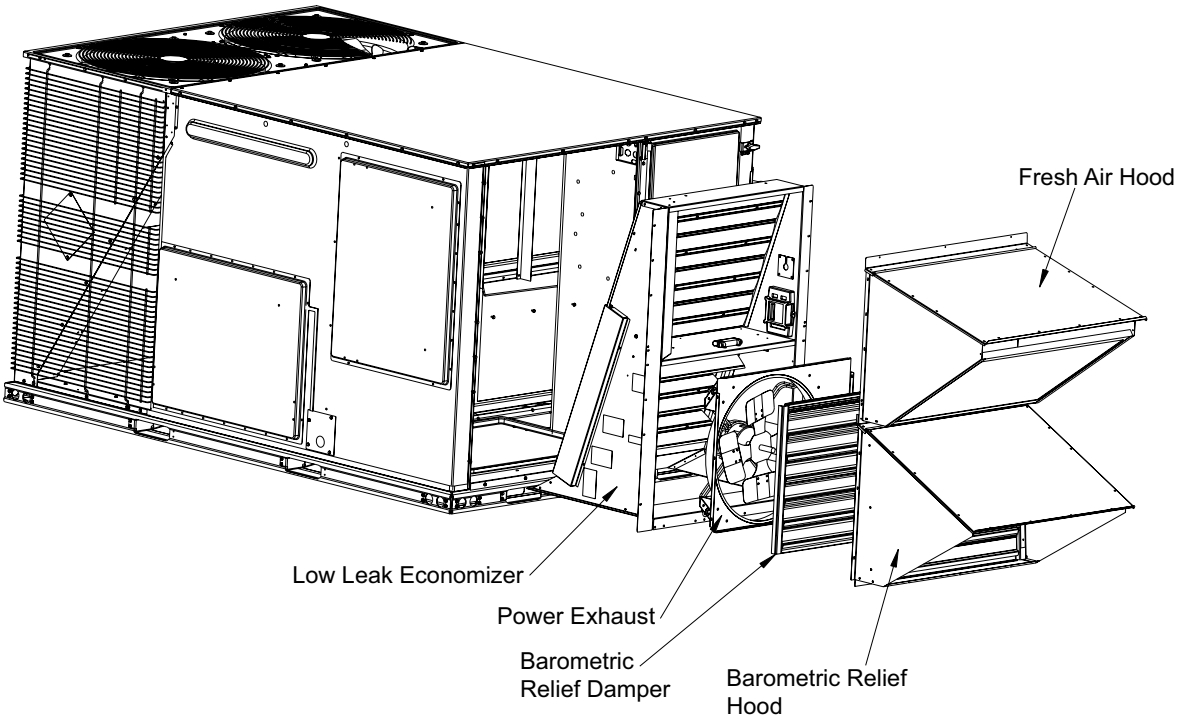

Economizer End Return W/Power Exhaust

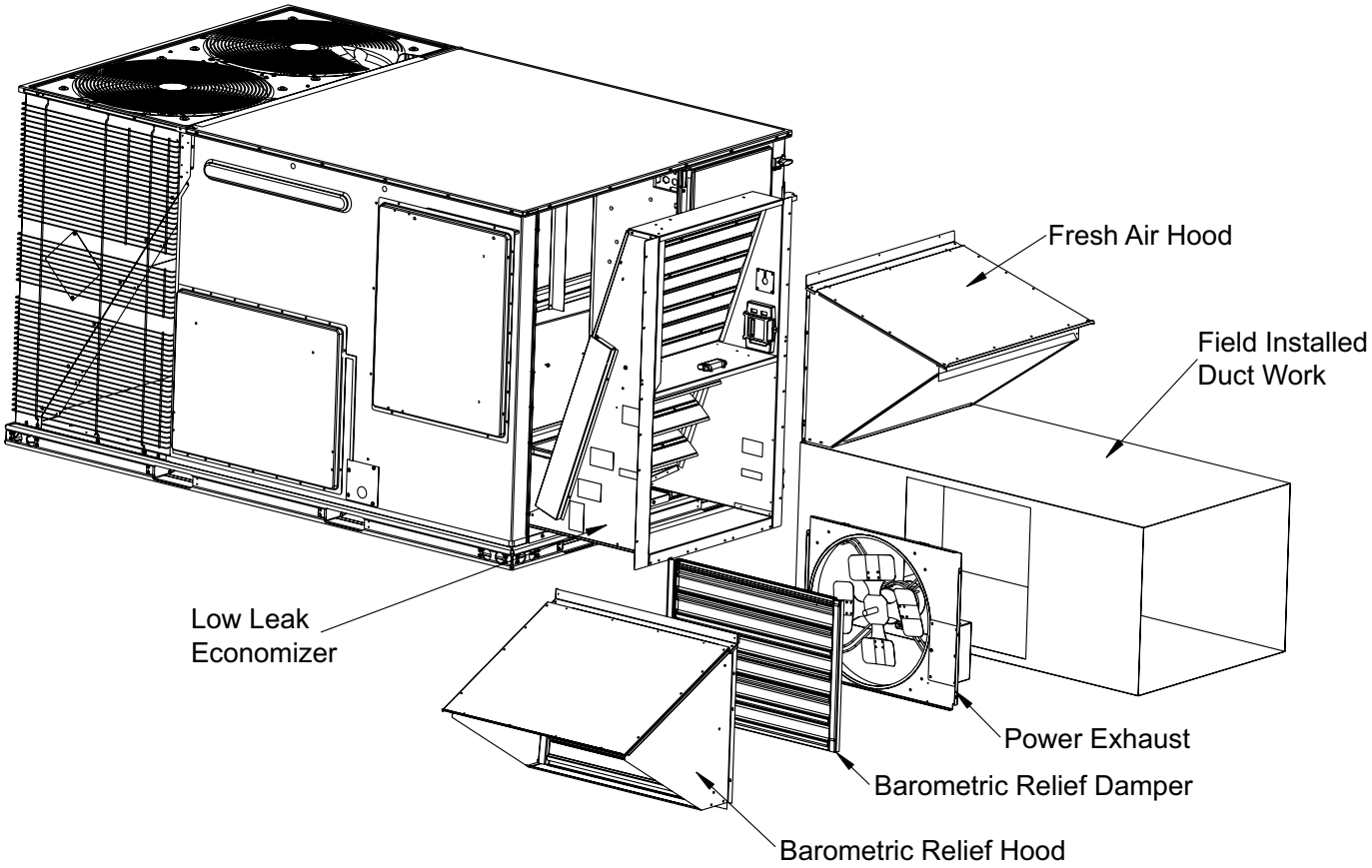

Field Installed Horizontal Economizer W/Power Exhaust

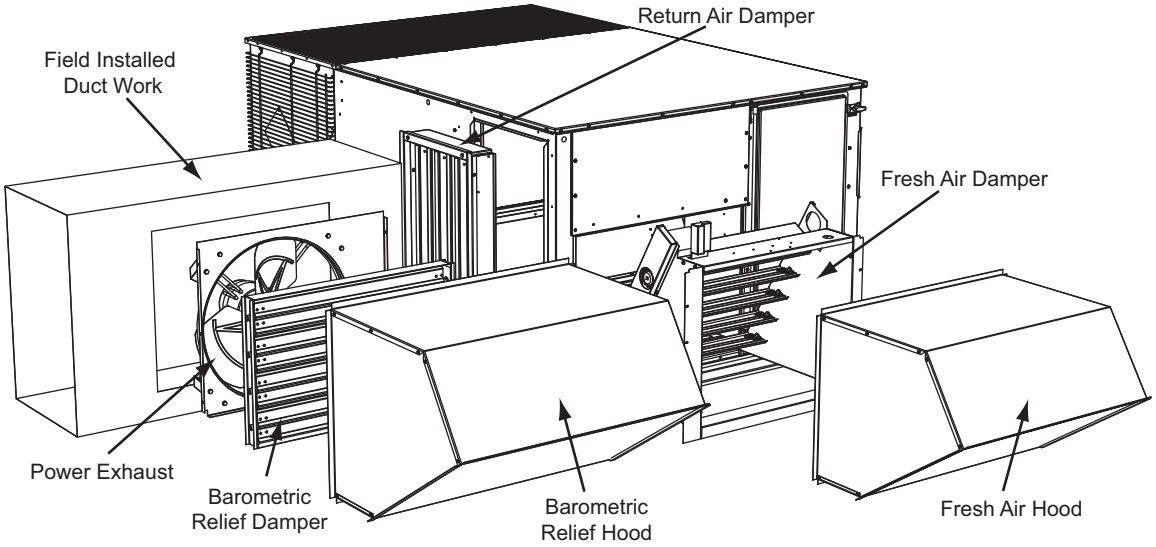

Subject to change without notice. Printed in U.S.A.
Copyright © 2018 by Johnson Controls, Inc. All rights reserved.

5167798-YTG-J-0218
Supersedes: 5167798-YTG-I-0118

York International Corporation
5005 York Drive
Norman, OK 73069

CONDENSING COMMERCIAL GAS WATER HEATERS

ARMOR®
CONDENSING WATER HEATER

SMART SYSTEM™

CASCADING SEQUENCER

CON·X·US® REMOTE CONNECT CAPABLE

EIGHT MODELS FROM 150,000 TO 800,000 BTU/HR

FIRING RATE MODULATION TO 5:1

LESS THAN 20 ppm NOx

DIRECT-VENT FLEXIBILITY TO 100 FEET

96% AHRI CERTIFIED™ www.ahridirectory.org
THERMAL EFFICIENCY

Lochinvar®
HIGH EFFICIENCY BOILERS & WATER HEATERS

DESIGNED ★ ENGINEERED ★ ASSEMBLED
USA

Lochinvar.com

ARMOR®
CONDENSING WATER HEATER

A Better Way to Achieve 96% Thermal Efficiency

ARMOR is a fully condensing commercial gas water heater. Available in eight models with inputs ranging from 150,000 to 800,000 Btu/hr, the ARMOR achieves thermal efficiencies up to 96%.

Separate Tank for Flexibility, Lower Replacement Costs

With standard tank-type water heaters, your choices are limited when it comes to matching input with storage capacity to meet "peak demand" delivery requirements. With ARMOR, you can match one or more water heaters with inputs ranging from 150,000 to 800,000 with one or more storage tanks in a wide variety of sizes. Lochinvar Lock-Temp® tanks are available to meet the need, from our 80-gallon vertical to the 5000-gallon vertical or horizontal model. Another advantage of the ARMOR "dual component" system is lower replacement costs. Standard tank-type designs require replacement of the entire water heater. With ARMOR, you'll save time and money by only replacing individual components as needed, such as the pump or storage tank.

AW (286-801)

Fully Modulating with 5:1 Turndown

ARMOR features advanced Negative Regulation (Neg/Reg) sealed combustion technology, permitting fan speed to constantly adjust the volume of fuel and air entering the burner. This ensures that ARMOR can safely and reliably operate with supply gas pressure as low as 4 inches water column.

ARMOR is equipped with fully modulating combustion with 5:1 turndown. This means ARMOR can fire as low as 20% of maximum input when water heating demand is lowest, and increase the firing rate up to 100% as demand increases. The result is better overall efficiency and less cycling, compared to tank-type units which are "on-off," which means they can only fire at 100% of maximum input.

Stainless Steel Condensing Heat Exchanger

The ARMOR's stainless steel heat exchanger is built to ASME Section IV requirements. Its design provides superior resistance to corrosion caused by condensation from low entering water temperatures. Non - Condensing commercial water heaters will fail early with low entering water temperatures; however, with the ARMOR the lower the supply water temperature the more efficiently it performs throughout the life of the heater.

Direct-Venting up to 100 Feet

Sidewall Vent Termination

ARMOR offers 7 venting options and tremendous flexibility for placement of units within the building, because it permits direct-vent air intake and exhaust runs up to 100 equivalent feet using either PVC, CPVC, Polypropylene or AL29-4C stainless steel vent pipe. Intake and exhaust runs can terminate horizontally through a sidewall or vertically through the roof.

**Optional Concentric Vent Kit Sold Separately (for 151-601 Models)*

Factory Supplied and Shipped Standard with Every Model

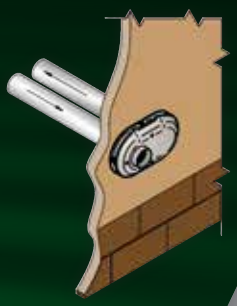

Lochinvar SMART SYSTEM™

Water Heater Control, From Anywhere.

ARMOR features the next generation of Lochinvar's all-in-one SMART SYSTEM operating control with an advanced multi-color LCD interface. SMART SYSTEM provides outstanding functionality, and can be integrated directly into a Building Management System via ModBus and other communication protocols. And now, the CON·X·US mobile communication platform allows SMART SYSTEM to go where no other water heater has gone before.†

CON·X·US provides the ability to monitor and manage Armor water heaters without ever stepping into the mechanical room. CON·X·US will send alerts via text or e-mail with notification of changes in system status, and anytime, from anywhere, a user can check system status and re-program water heater functions. Once downloaded, the free CON·X·US mobile application allows for remote access to all SMART SYSTEM functions using any internet-capable device.

CON·X·US®

† CON·X·US board sold separately. See back cover for a complete list of SMART SYSTEM features.

Long-Lasting "Life Cycle" Efficiency

In a standard tank-type water heater, lime scale builds up over time on important heat transfer surfaces, insulating the water from the heat source. This decreases thermal efficiency and increases operating cost. Just 1/4" of lime scale can increase operating costs as much as 25%! This buildup in the bottom of the tank and around the flue tubes can cause tank-type heaters to fail in as little as 2-3 years.

ARMOR's "Better idea" concept eliminates the impact of lime scale, maintaining a high-rated thermal efficiency and low operating cost throughout its long life cycle.

The chart below illustrates how ARMOR is a better way, delivering true "life cycle efficiency" compared to standard tank-type units.

Traditional tank-type water heater flue tubes with nearly 6" of lime scale buildup

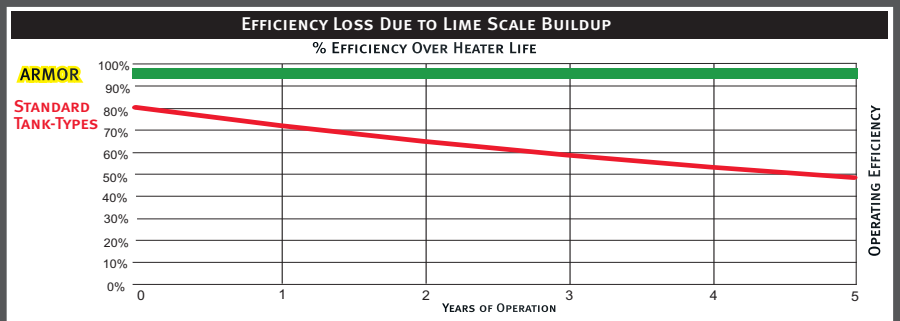

NOTE: The chart is based on limescale build-up of 1/16 inch per year which reduces operating efficiency approximately 8-10% per year.

Flexible Venting Options - Up to 100 feet of air intake and 100 feet of exhaust vent with PVC, CPVC, Polypropylene or SS.

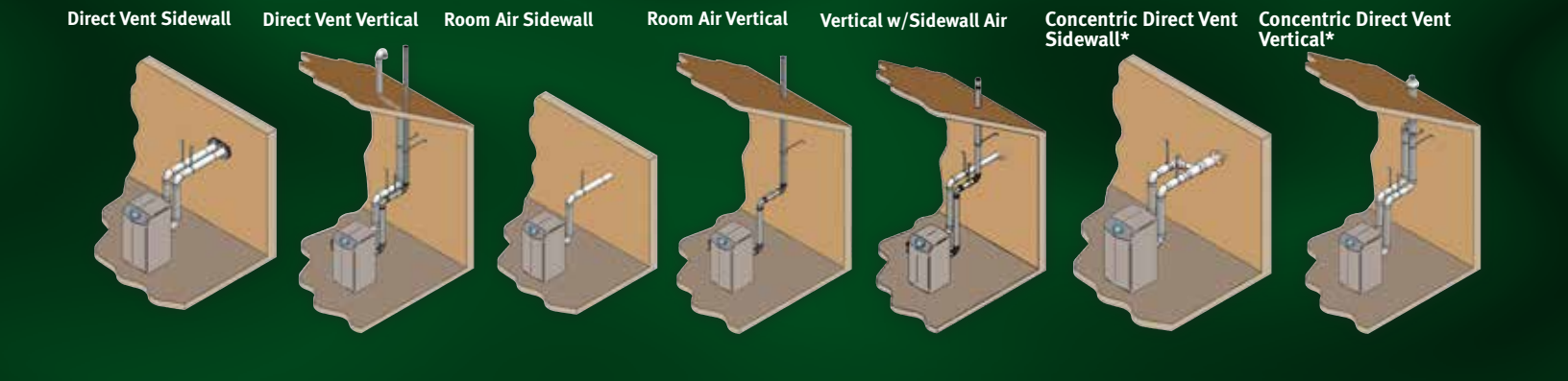

Armor™ Water Heater Dimensions and Specifications

Models 151 & 200

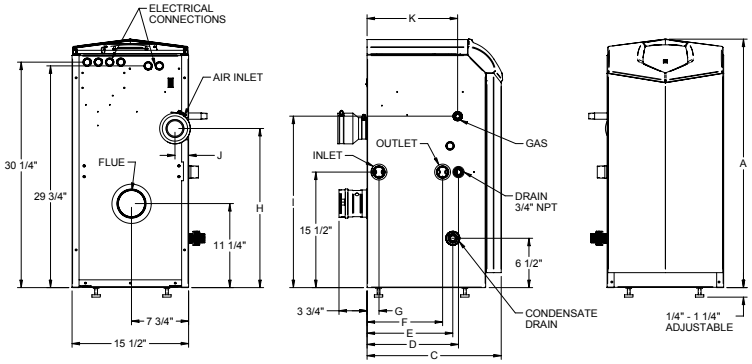

Models 286-801

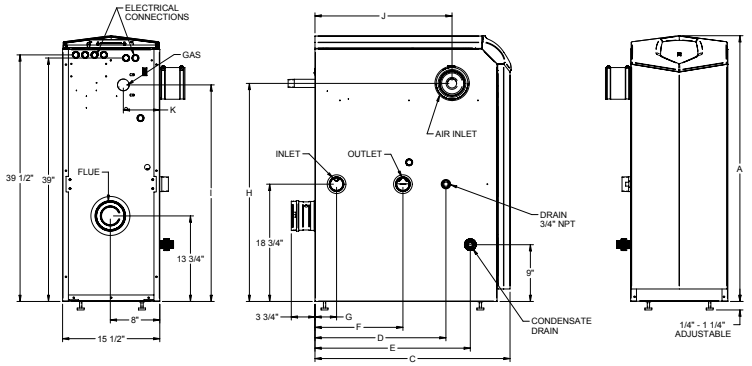

Model Number Guide

AW	N	151	PM
Model	Natural Gas	Btu/hr Input	Pump Mount

Armor Water Heater,
Natural Gas,
150,000 Btu/hr Input,
Pump Mount

Model Number	Btu/hr Input	GPH @ 100° Rise	A	C	D	E	F	G	H	I	J	K	Gas Conn.	Water Conn.	Air Inlet	Vent Size	Shipping Wt. (lbs.)
AWN151PM	150,000	175	33-1/4"	18"	12-1/4"	11-1/2"	10"	1-1/2"	21-1/4"	23"	1-3/4"	12"	1/2"	1-1/4"	3"	3"	165
AWN200PM	199,999	233	33-1/4"	22-1/4"	16-1/2"	15-3/4"	14-1/4"	5-1/4"	21-1/4"	23"	1-3/4"	16-1/4"	1/2"	1-1/4"	3"	3"	181
AWN286PM	285,000	332	42-1/2"	19-3/4"	12-3/4"	13-1/2"	6"	2"	34"	31"	11-3/4"	4-1/4"	3/4"	2"	4"	4"	236
AWN400PM	399,999	466	42-1/2"	27"	21"	20-3/4"	14"	3-1/2"	34"	34"	18-3/4"	2"	1"	2"	4"	4"	306
AWN501PM	500,000	582	42-1/2"	31-1/2"	21"	25"	14"	3-1/2"	35"	35"	22"	5-3/4"	1"	2"	4"	4"	339
AWN601PM	600,000	699	42-1/2"	36-1/4"	21"	25"	14"	3-1/2"	36"	32-3/4"	19-1/2"	5-1/2"	1"	2"	4"	4"	380
AWN701PM	700,000	815	42-1/2"	40-1/4"	23"	29"	17"	3-1/2"	36"	32-3/4"	23-1/2"	3-1/4"	1"	2"	4"	6"	461
AWN801PM	800,000	931	42-1/2"	45-1/4"	23"	33-1/4"	17"	3-1/2"	36"	32-3/4"	27-3/4"	3-1/4"	1"	2"	4"	6"	527

Standard Features

- **96% Thermal Efficiency (AHRI Certified)**
- **Modulating Burner with 5:1 Turndown**
  - Direct-Spark Ignition
  - Low NOx Operation
  - Sealed Combustion
  - Low Gas Pressure Operation
- **Vertical & Horizontal Direct-Vent**
  - PVC, CPVC, Polypropylene or SS up to 100 Feet
  - PVC/CPVC Sidewall Vent Termination
- **Stainless Steel Heat Exchanger**
  - All Welded Construction, Gasketless Design
  - 160 psi Working Pressure
  - ASME Construction (AW 286-801)
- Natural to L.P. Conversion Kit
- All Bronze Circulating Pump
- On/Off Switch
- Flow Switch
- ASME Temperature & Pressure Relief Valve (286-801)
- Downstream Test Valves (AW 501-801)
- Adjustable Leveling Legs
- Tank Sensor
- Adjustable High Limit w/ Manual Reset
- Automatic Reset High Limit
- Condensate Trap
- Zero Clearances to Combustible Material
- 5 Year Limited Warranty (See Warranty for Details)
- 1 Year Parts Warranty (See Warranty for Details)

Smart System Features

- **SMART SYSTEM Digital Operating Control**
  - Multi Color Graphic LCD Display
- **Built in Cascading Sequencer for up to 8 Water Heaters**
  - Multiple Size Water Heater Cascade
  - Lead Lag
  - Efficiency Optimization
  - Front-End Loading Capability with CopperFin II
- **Building Management System Integration**
  - 0-10 VDC Input to Control Modulation or Set point
  - 0-10 VDC Modulation Rate Output
  - 0-10 VDC Input to Enable/Disable call for heat
- Access to BMS Settings Through Graphic LCD Display
- Low Water Flow Safety Control & Indication
- Inlet & Outlet Temperature Sensors & Readout
- Flue Temperature Sensor
- Water Heater Pump Control
- Pump Delay with Freeze Protection
- Pump Exercise
- Night Setback
- Building Recirculation Loop Pump Control
  - Night Setback of Building Recirculation Loop
- Time Clock
- **Maintenance Reminder**
  - Ability to program installer name and number into the product as service contact

- **High Voltage Terminal Strip**
  - 120 VAC / 60 Hertz / 1 Phase Power Supply
  - Pump Control Contacts
    - Water Heater Pump Control Contacts
    - Building Recirculation Pump Control Contacts
- **Low Voltage Terminal Strip**
  - 24 VAC Auxiliary Device Relay
  - Auxiliary Proving Switch Contacts
  - Flow Switch Contacts
  - Alarm on Any Failure Contacts
  - Runtime Contacts
  - Tank Sensor Contacts
  - Cascade Contacts
  - 0-10 VDC BMS External Control Contact
  - 0-10 VDC Boiler Rate Output Contacts

Firing Control Systems

M9 Standard Construction
M7 California Code (AW 286-801)

Optional Equipment

- CON·X·US® Remote Connectivity
- Alarm Bell
- Condensate Neutralization Kit
- High & Low Gas Pressure Switches (AW 501-801)
- Concentric Vent Kit (3" & 4" PVC/CPVC only)
- BMS Gateway to LON
- Bacnet Communication
- ModBus Communication
- SMART SYSTEM PC Software
- Room Air Vent Kits
- Stack Frame

Lochinvar®
HIGH EFFICIENCY BOILERS & WATER HEATERS

Lochinvar, LLC
300 Maddox Simpson Parkway
Lebanon, Tennessee 37090
P: 615.889.8900 / F: 615.547.1000
Lochinvar.com

LOW NOx ENERGY STAR LOW LEAD CONTENT HLW

QUALITY IS SOMETHING WE TAKE PERSONALLY

AMERICAN QUALITY
DESIGNED, ENGINEERED & ASSEMBLED IN THE USA

We design and assemble YORK® Sunline™ and Sunline MAGNUM™ Series single-packaged rooftop units here in North America, where we can closely monitor and improve processes that directly affect quality. It's this commitment to excellence that allows us to offer outstanding warranties, meet the highest industry standards and deliver energy-saving comfort that lasts.

Sunline™ Gas/Electric Rooftop Packaged Units (ZF)

MODEL	COOLING MBH	EER	IEER[1]	HEATING MBH OUTPUT	% SSE	LBS.
ZF180N30	165	11.0	12.1	240	80.0	1870
ZF180N40	165	11.0	12.1	320	80.0	1870
ZF210N30	204	11.0	11.9	240	80.0	2006
ZF210N40	204	11.0	11.9	320	80.0	2006
ZF240N30	240	10.0	11.0	240	80.0	2533
ZF240N40	240	10.0	11.0	320	80.0	2533
ZF300N30	270	10.0	10.5	240	80.0	2597
ZF300N40	270	10.0	10.5	320	80.0	2597

[1]IEER values of up to 13.2 available with the Intelli*Speed*™ option

Sunline™ Rooftop Packaged Units (ZF)

MODEL	COOLING MBH	EER	IEER[1]	ELECTRIC HEAT (KW)	LBS.
ZF180C00	165	11.0	12.1	18	1870
ZF210C00	204	11.0	11.9	18	2006
ZF240C00	240	10.0	11.0	18	2533
ZF300C00	270	10.0	10.5	18	2597

[1]IEER values of up to 13.2 available with the Intelli*Speed*™ option

Sunline™ MAGNUM™ Gas/Electric Rooftop Packaged Units (ZJ)

MODEL	COOLING MBH	EER	IEER[1]	HEATING MBH OUTPUT	% SSE	LBS.
ZJ180N30	172	12.2	13.4	240	80.0	2609
ZJ180N40	172	12.2	13.4	320	80.0	2609
ZJ210N30	202	12.1	13.0	240	80.0	2665
ZJ210N40	202	12.1	13.0	320	80.0	2665
ZJ240N30	240	11.0	12.0	240	80.0	2697
ZJ240N40	240	11.0	12.0	320	80.0	2697
ZJ300N30	280	10.6	11.0	240	80.0	2783
ZJ300N40	280	10.6	11.0	320	80.0	2783

[1]IEER values of up to 14.0 available with the IntelliSpeed™ option

Sunline™ MAGNUM ™ Rooftop Packaged Units (ZJ)

MODEL	COOLING MBH	EER	IEER	LBS.
ZJ180C00	172	12.2	13.4	2609
ZJ210C00	202	12.1	13.0	2665
ZJ240C00	240	11.0	12.0	2697
ZJ300C00	280	10.6	11.0	2783

LIMITED WARRANTIES:

ZF and ZJ gas/ electric models:

10 YEAR HEAT EXCHANGER LIMITED WARRANTY
5 YEAR COMPRESSOR LIMITED WARRANTY
1 YEAR PARTS LIMITED WARRANTY

ZF and ZJ electric/ electric models:

5 YEAR ELECTRIC HEAT EXCHANGER LIMITED WARRANTY
5 YEAR COMPRESSOR LIMITED WARRANTY
1 YEAR PARTS LIMITED WARRANTY

All models meet or exceed ASHRAE 90.1-2012 Standards, and select models are ENERGY STAR® qualified.

NATE WE ENCOURAGE NATE CERTIFICATION

YORK®

The YORK brand of Johnson Controls, Inc. ©2016 Johnson Controls, Inc. 5005 York Drive, Norman, OK 73069 www.YORK.com Subject to change without notice. PUBL-6452-D-0516 Supersedes: PUBL-6452-C-1015 All rights reserved.

YORK®

INSTALL CONFIDENCE

SUNLINE™ AND SUNLINE MAGNUM™ SERIES SINGLE-PACKAGED ROOFTOPS

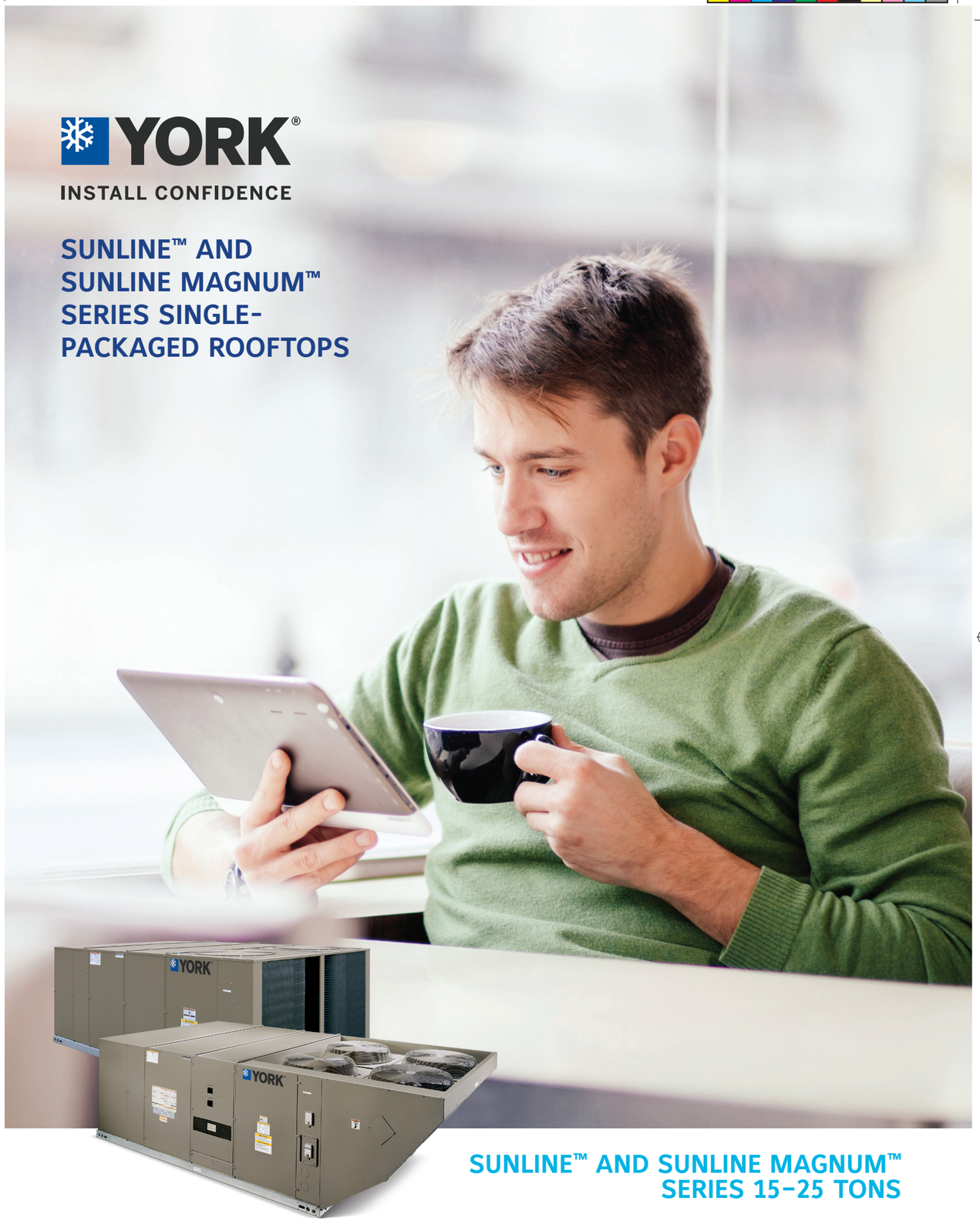

SUNLINE™ AND SUNLINE MAGNUM™ SERIES 15-25 TONS

SMARTER TECHNOLOGY FOR BETTER PERFORMANCE

For more than 140 years, YORK® commercial systems have provided heating and cooling solutions for some of the world's most demanding applications. Today, smart YORK® Sunline™ and Sunline MAGNUM™ Series packaged units deliver the simplicity and performance that give you a competitive advantage on practically every rooftop project.

SUNLINE™ AND SUNLINE MAGNUM™ SERIES SINGLE-PACKAGED ROOFTOPS 15–25 TONS

The YORK® Sunline™ Series combines high-efficiency and advanced economizer controls with unprecedented installation flexibility and low installed costs, providing a great solution for commercial-building applications.

- Simplicity® Smart Equipment (SE) Controls ensure easier installation, startup and troubleshooting versus electromechanical controls.
- High- and low-pressure switches – one each per circuit
- Power ventor motor with pre- and post-purge cycle
- Low-voltage circuit breakers
- Four independent cooling stages (Select Sunline MAGNUM™ models only)
- Double "V" coil bank with copper tubes and enhanced aluminum fins (Sunline MAGNUM™ only)
- Optional factory-mounted disconnect switch and your choice of powered or non-powered convenience outlet
- Four condenser fans (Sunline MAGNUM™ only)
- Internal fusing
- Class 1 and Class 2 transformers
- Two-stage gas train
- Belt drive blower motor
- Capillary tubes sheathed in vinyl to prevent chafing

GET THE ADVANTAGES OF ADVANCED FEATURES

Improved heat transfer.
The Sunline™ and Sunline MAGNUM™ units feature grooved copper tubes and enhanced aluminum fin construction indoor and outdoor coils for better heat transfer and improved efficiency.

Reliable operation.
The compressor is internally protected against high pressure and temperature to ensure dependable performance in tough conditions.

Greater durability.
Sunline™ and Sunline MAGNUM™ gas heat exchangers offer corrosion-resistant, aluminized steel tubular construction for long-term durability.

Limited maintenance.
For years of trouble-free service, the condenser and evaporator fan motor bearings are permanently lubricated to ensure reliable performance.

Solid foundation.
Installation goes smooth and easy thanks to full-perimeter base rails that are permanently attached to the unit to save time and materials.

Outstanding warranty.
With more than a century of innovation behind our name, you can depend on YORK® quality for year-round comfort and long-lasting durability. Built for years of trouble-free service and reliable operation, Sunline™ systems are backed by warranties you can count on.

Put performance in the palm of your hand

With Simplicity® SE Controls, all alarm and diagnostic data can be transmitted directly to an on-site PC or over a local Wi-Fi® connection – you can even monitor the system over the Internet using a Web browser.

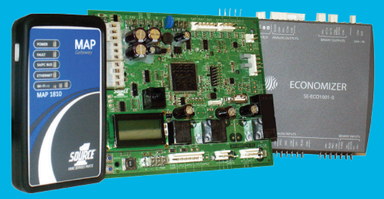

- Thermostat ready – No configuration required
- Wi-Fi® and Ethernet communications via optional Mobile Access Portal (MAP) Gateway
- Optional Fault Detection and Diagnostics (FDD) for entire refrigeration circuit and economizer (Title 24 Compliant)
- Onboard LCD
- Plug and Play Feature additions in the field
- Auto-configuration
- Factory-configured and Tested – No field programming required
- Self-test Diagnostic Startup Report
- Data Logging to removable memory (USB)
- Multi-protocol Capability
- SMART Device Tools (Mobile Access Portal Gateway)
- Fault "messages" instead of fault "codes"
- Single-zone VAV, VFD, Intelli*Speed*™ functionality
- BTL Certified

QUALITY IS SOMETHING WE TAKE PERSONALLY

AMERICAN QUALITY
DESIGNED, ENGINEERED & ASSEMBLED IN THE USA

We design and assemble YORK® Sunline™ Series single-packaged rooftop units here in North America, where we can closely monitor and improve processes that directly affect quality. It's this commitment to excellence that allows us to offer outstanding warranties, meet the highest industry standards and deliver energy-saving comfort that lasts.

ZR and ZF gas/electric models: 10 YEAR HEAT EXCHANGER LIMITED WARRANTY · 5 YEAR COMPRESSOR LIMITED WARRANTY · 1 YEAR PARTS LIMITED WARRANTY

ZR and ZF electric/electric models: 10 YEAR HEAT EXCHANGER LIMITED WARRANTY · 5 YEAR COMPRESSOR LIMITED WARRANTY · 1 YEAR PARTS LIMITED WARRANTY

XP models: 5 YEAR COMPRESSOR LIMITED WARRANTY · 1 YEAR PARTS LIMITED WARRANTY

Sunline™ Gas/Electric Rooftop Packaged Units (ZF)

MODEL	COOLING MBH	SEER	EER	MBH OUTPUT	% SSE	LBS.
ZF036H05	36.0	13.0	11.0	40.0	81	468
ZF036H10	36.0	13.0	11.0	80.0	81	468
ZF036N07	36.0	13.0	11.0	60.8	80	468
ZF036N11	36.0	13.0	11.0	92.0	80	468
ZF048H07	47.5	13.0	11.0	60.0	81	541
ZF048H12	47.5	13.0	11.0	100.0	81	541
ZF048N07	47.5	13.0	11.0	60.8	81	541
ZF048N12	47.5	13.0	11.0	100.6	80	541
ZF060H10	57.0	13.0	10.8	80.0	81	569
ZF060H12	57.0	13.0	10.8	100.0	81	569
ZF060N07	57.0	13.0	10.8	60.8	80	569
ZF060N12	57.0	13.0	10.8	100.6	80	569
ZF072H10	68.0	11.2	11.0	80.0	81	640
ZF072H12	68.0	11.2	11.0	100.0	81	640
ZF072N07	68.0	11.2	11.0	60.8	80	640
ZF072N12	68.0	11.2	11.0	100.6	80	640

Sunline™ Heat Pump Rooftop Packaged Units (XN)

MODEL	COOLING MBH*	SEER	EER	LBS.
XN036C00	37.0	14.0	12.0	610
XN036E	37.0	14.0	12.0	638
XN048C00	47.0	14.0	11.8	616
XN048E	47.0	14.0	11.8	644
XN060C00	55.4	14.0	11.0	625
XN060CE	55.4	14.0	11.0	653

**AHRI gross capacity*

Sunline™ Packaged Heat Pump Units (XP)

MODEL	COOLING MBH	SEER	EER	HSPF	LBS.
XP036C00	35.0	13.0	11.4	7.7	575
XP036E	35.0	13.0	11.4	7.7	598
XP048C00	49.5	13.0	11.0	7.7	585
XP048E	49.5	13.0	11.0	7.7	608
XP060C00	57.5	13.0	10.6	7.7	590
XP060E	57.5	13.0	10.6	7.7	613

Sunline™ MagnaDRY™ Gas/Electric Rooftop Packaged Units (ZR)

MODEL	COOLING MBH	SEER	EER	HEATING MBH OUTPUT	% SSE	LBS.
ZR036H05	35.0	13.0	11.2	40.0	81	575
ZR036H10	35.0	13.0	11.2	80.0	81	575
ZR036N07	35.0	13.0	11.2	60.8	80	575
ZR036N11	35.0	13.0	11.2	92.0	80	575
ZR048H07	48.0	13.0	11.2	60.0	81	585
ZR048H12	48.0	13.0	11.2	100.0	81	585
ZR048N07	48.0	13.0	11.2	60.8	80	585
ZR048N12	48.0	13.0	11.2	100.6	80	585
ZR060H10	58.5	13.0	11.2	80.0	81	590
ZR060H12	58.5	13.0	11.2	100.0	81	590
ZR060N07	58.5	13.0	11.2	60.8	81	590
ZR060N12	58.5	13.0	11.2	100.6	81	590

All models meet or exceed ASHRAE 90.1-2012 Standards, and select models are ENERGY STAR® qualified.

Sunline™ Electric/Electric Rooftop Packaged Units (ZF)

MODEL	MBH COOLING	SEER	EER	LBS.
ZF036E	36.0	13.0	11.0	468
ZF048E	47.5	13.0	11.0	541
ZF060E	57.0	13.0	10.8	569
ZF072C00	68.0	11.2	11.3	640

Sunline™ Cooling Only Rooftop Packaged Units (ZF)

MODEL	COOLING MBH	SEER	EER	LBS.
ZF036C00	36.0	13.0	11.0	468
ZF048C00	47.5	13.0	11.0	541
ZF060C00	57.0	13.0	11.0	569
ZF072C00	68.0	11.2	11.3	640

Sunline™ Gas/Electric Rooftop Packaged Units (ZE)

MODEL	COOLING MBH	SEER	EER	LBS.
ZE036H05	36.0	14.0	12.0	540
ZE036H10	36.0	14.0	12.0	540
ZE036N07	36.0	14.0	12.0	540
ZE036N11	36.0	14.0	12.0	540
ZE048H07	47.5	14.0	12.0	668
ZE048H12	47.5	14.0	12.0	668
ZE048N07	47.5	14.0	12.0	668
ZE048N12	47.5	14.0	12.0	668
ZE060H10	57.0	14.0	11.8	702
ZE060H12	57.0	14.0	11.8	702
ZE060N07	57.0	14.0	11.8	702
ZE060N12	57.0	14.0	11.8	702

Sunline™ MagnaDRY™ Cooling Only Rooftop Units (ZR)

MODEL	COOLING MBH	SEER	EER	LBS.
ZR036C00	36.0	13.0	11.0	575
ZR048C00	48.0	13.0	11.0	585
ZR060C00	60.0	13.0	11.0	590

Sunline™ MagnaDRY™ Electric/Electric Rooftop Packaged (ZR)

MODEL	COOLING MBH	SEER	EER	ELECTRIC HEAT (KW)	LBS.
ZR036E	35.0	13.0	11.2	5, 7, 10, 15, 20	575
ZR048E	48.0	13.0	11.2	5, 7, 10, 15, 20	585
ZR060E	60.0	13.0	11.2	5, 7, 10, 15, 20, 30	590

YORK®

The YORK brand of Johnson Controls, Inc. ©2016 Johnson Controls, Inc. 5005 York Drive, Norman, OK 73069 www.YORK.com Subject to change without notice. PUBL-6516-D-0516 Supersedes: PUBL-6516-C-1015 All rights reserved.

NATE WE ENCOURAGE NATE CERTIFICATION

YOUTUBE

YORK®

INSTALL CONFIDENCE

SUNLINE™ SERIES SINGLE-PACKAGED ROOFTOPS

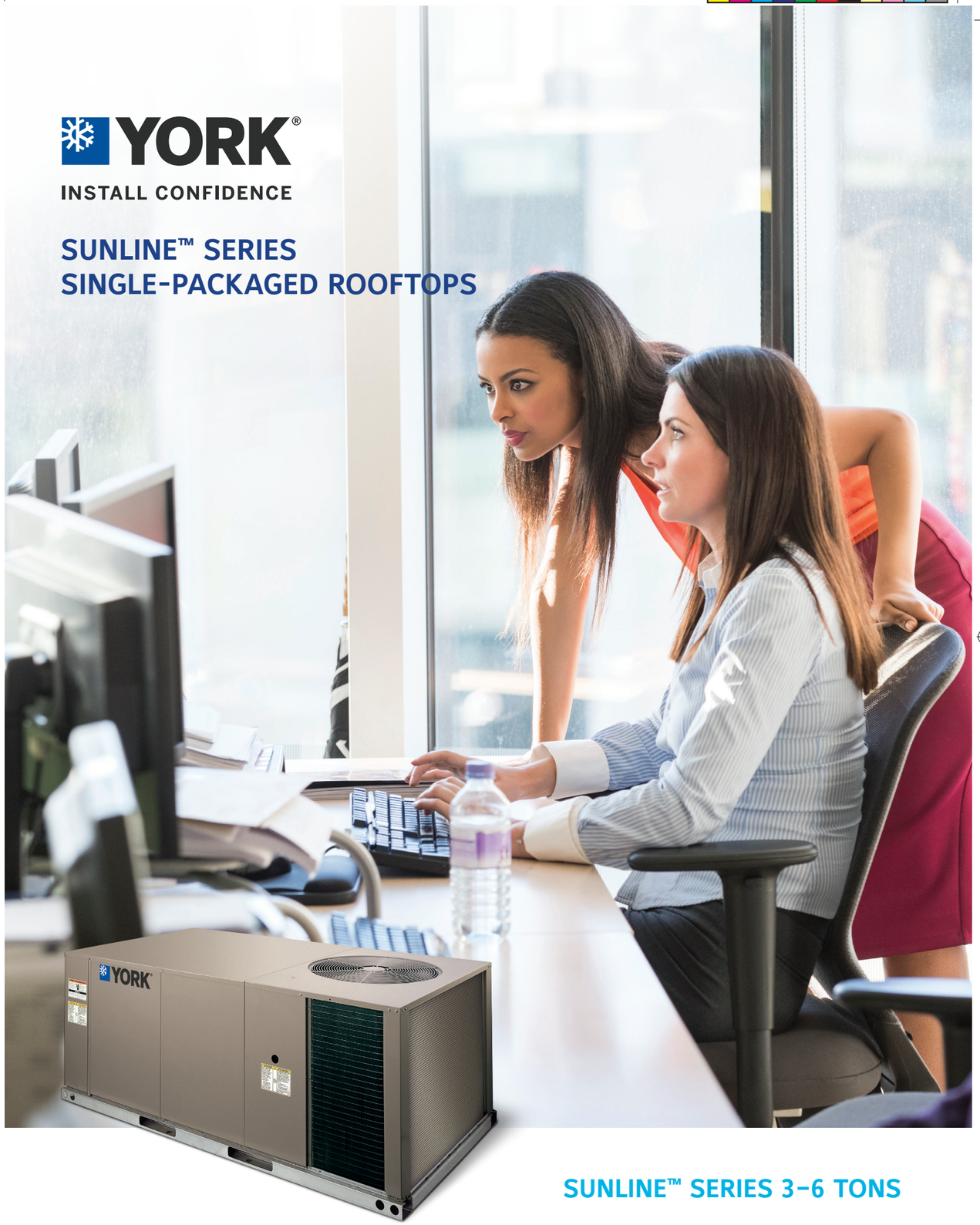

SUNLINE™ SERIES 3-6 TONS

SMARTER TECHNOLOGY FOR BETTER PERFORMANCE

For more than 140 years, YORK® commercial systems have provided heating and cooling solutions for some of the world's most demanding applications. Today, smart YORK® Sunline™ Series packaged units deliver the simplicity and performance that give you a competitive advantage on practically every rooftop project.

SUNLINE™ SERIES SINGLE-PACKAGED ROOFTOPS 3–6 TONS

The YORK® Sunline™ Series combines high-efficiency and advanced economizer controls with unprecedented installation flexibility and low installed costs, providing a great solution for commercial-building applications.

- Simplicity® Smart Equipment (SE) Controls ensure easier installation, startup and troubleshooting versus electromechanical controls.
- Common, compact design fits in a single footprint
- Complete line of field-installed accessories

GET THE ADVANTAGES OF ADVANCED FEATURES

Durable, efficient MicroChannel coil.
The all-aluminum MicroChannel condenser coil provides outstanding efficiency and reliability thanks to an advanced coil design. (MicroChannel coils only apply to air conditioning models.)

Reliable operation.
The compressor is internally protected against high pressure and temperature to ensure dependable performance in tough conditions.

Greater durability.
Durable finish using powder-painted, galvanized steel meets 1,000-hour salt-spray test demands as assurance of a long-lasting, corrosion-resistant cabinet.

Limited maintenance.
For years of trouble-free service, the condenser and evaporator fan motor bearings are permanently lubricated to ensure reliable performance.

Solid foundation.
Installation goes smooth and easy thanks to full-perimeter base rails that are permanently attached to the unit to save time and materials.

Outstanding warranty.
With more than a century of innovation behind our name, you can depend on YORK® for year-round comfort and long-lasting durability. Built for years of trouble-free service and reliable operation, Sunline™ systems are backed by warranties you can count on.

Put performance in the palm of your hand

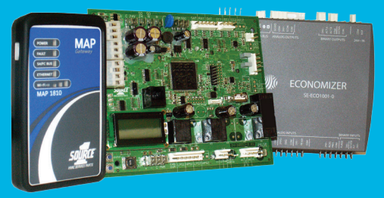

With Simplicity® SE Controls, all alarm and diagnostic data can be transmitted directly to an on-site PC or over a local Wi-Fi® connection – you can even monitor the system over the Internet using a Web browser.

- Thermostat ready – No configuration required
- Wi-Fi® and Ethernet communications via optional Mobile Access Portal (MAP) Gateway
- Onboard LCD
- Plug and Play Feature additions in the field
- Auto-configuration
- Factory-configured and Tested – No field programming required
- Self-test Diagnostic Startup Report
- Data Logging to removable memory (USB)
- Multi-protocol Capability
- SMART Device Tools (MAP Gateway)
- Fault "messages" instead of fault "codes"
- BTL Certified

PRODUCT
GILSULATE 500XR®

District Heating and Cooling
Steam and Condensate Return
Chilled Water Distribution
Domestic Hot Water Systems
Geothermal Distribution
Fuel & Heavy Oil Transport
Sanitary Sewer Distribution
Nuclear Waste Transfer Lines
Solar System Distribution
Waste Heat Recovery
Process Fluid Transport
Superheated Hot Water Systems
Petrochemical Lines
Molten Sulphur Lines
Power & Gas Lines
Condenser Water
Load-Bearing Fill
Freeze Protection
Storage Tanks
Above ground Utilidor
Corrosion Protection
Encasement of Field Applied Joints
Repairs on PIP Systems
Critical Energy Recovery
Electrical Thermal Barrier
Expansion System for Oil Lines
Concrete Trenches

Manufacturer, Proprietor of Patent and Product

Gilsulate International, Incorporated
26000 Springbrook Ave 201 Santa Clarita, Ca 91350
800-833-3881 - www.gilsulate.com

PRODUCT: Gilsulate®500XR (Patent 4,231,884)
"Exact Match Only" This necessary item is not available under any other product name.
*There is no equal alternative to or replacement for Gilsulate®500XR.
*(*Case 2:13-cv-01012-RSWL-JPR)*

Basis for Invention/Patent of Gilsulate®500XR

- Improved Thermal Insulation
- Excellent Load Bearing Properties
- For Underground Structures
- Corrosion Protection
- Resistance To Water Penetration
- Low Density Material

Superior Quality

- Nearly 75 Year Old System Design Details
- UFGS 33.61.13 Meets & Exceed U.S. Military Standards
- Meets ASTM Industry Standards & 3rd Party Lab Tests
- Warrantied For Use & Application

General Information

For nearly 75 years owners have come to expect lower installed cost, favorably priced, simplistic system, long-term efficiency and reliability associated with the trade name Gilsulate®. Gilsulate 500XR® is recognized throughout the world as the leading insulation and protection system for direct buried piping, tanks and structures. Gilsulate500XR's formula was invented, engineered, and patented to create a product that offers thermal insulation, corrosion protection and loadbearing capabilities for application temperature ranges from 35°F – 800°F and is unlike any other product available in the marketplace. Gilsulate 500XR has a global, long-term track record of reliability and successful installations.

Some projects include: world's largest medical center, world's largest regasification plant, world's largest waste treatment plant and the first power plant to be issued a greenhouse gas permit by the U.S. Environmental Protection Agency. Specific system examples include: steam and condensate lines buried in the permafrost of Alaska to hot oil lines in the Virgin Islands to amine lines in Australia to chilled water lines buried in the hot desert sands of Saudi Arabia .

The material Gilsulate500XR is a controlled density insulation and corrosion protection product which assures owners that the installed density and thermal properties are consistent; eliminating variability or "shorting" due to varying static backfill loads or insulation degradation. Only its patented material formula can be mechanically compacted to provide insulation stability and offer even at shallow burials HS20 loading capabilities for underground lines under roadways. Gilsulate has performed above our customer's expectations in real world side by side infrared thermal scans where the pre-insulated system was visible but the Gilsulate system was undetectable. Even in areas where 100-year floods have occurred and subjected the system to real world 22 foot hydrostatic heads the Gilsulate system was unaffected and is still in operation today.

Why Gilsulate?

What do flagship Colleges and Universities, internationally recognized engineering firms and world class EPC contractors have in common? For one, they choose Gilsulate 500XR for their district heating, cooling and corrosion protection systems. They trust their energy distribution networks and high profile projects to Gilsulate because "no rain checks, no excuses, no delay" is what Gilsulate delivers. For nearly 75 years, Gilsulate has been recognized as the go to product when cost, unparalleled efficiency, reliability, innovation and sustainability were required. The "trenchscapes" of underground distribution systems are changing at a much higher pace than ever before.

In today's global market of shrinking budgets contractors are faced with thin margins, high costs and tight deadlines. Contractors are seeking a recognized and accepted viable cost saving alternative to the pre-insulated piping systems when bidding underground insulated piping projects; they are turning to the "Gilsulate Advantage." Lead times can set a project back, unknown obstructions can require ordering special fabricated sections and fittings potentially grinding a project to a halt; affecting their bottom line. With Gilsulate's highly respected insulation and corrosion protection system, excellent track record of success, lower installed costs, material available to ship immediatly and field flexibility for those unknown construction site obstructions... contractors are finding Gilsulate as their competive advantage solution to secure and expedite projects in the marketplace today.

Call us to find out how Gilsulate 500XR is exceeding owners, engineers and contractors expectations around the globe and we can talk you through your next project.

PHYSICAL PROPERTIES (Refer to GII's Design & Installation Manual for complete information)

1 ASTM C177-04 Thermal Conductivity (tested @ use density):
K = 0.53 Btu/hr.ft2 °F/in. @ 100°F
K = 0.60 Btu/hr.ft2 °F/in. @ 175°F
K = 0.65 Btu/hr.ft2 °F/in. @ 300°F

2 ASTM D1895A - Bulk Density
30-34 lbs./ft3

3 ASTM D1895C (400 lbs.) Consolidated Cubic Foot Installed/Use Density (CFUD)
40-42 lbs./ft3 CFUD

4 ASTM D1895C (1000 lbs.) Consolidated Cubic Foot Installed/Use Density (CFUD)
40-42 lbs./ft3 CFUD

5 ASTM D1895C (400 lbs.) Percent of compaction of installed density under static load
Shall not exceed more than 1% compaction

6 ASTM D1895C (12,000+lbs.) Material Bearing Under Applied Static Loading
12,000 lbs./psf Load Bearing

7 Particle Sizing Range:
"Well-graded" diameter ranging from 1mm to sub-micron sizes

8 Material Stability:
Direct-buried material must support weight of a man prior to backfill

9 Temperature Range:
35°F to 800°F

10 Electrical Resistivity:
Greater than 10 to the 12th Ohm-cm

11 Hydrostatic Head
Withstand moisture penetration equivalent to 48" head for greater than 30 days

©Gilsulate International, Inc.

data sheet

niagara4 supervisor

PRODUCT DEFINITION

The Niagara 4 Supervisor is an IoT (Internet of Things) software platform used in server-class applications. It makes managing all buildings at an enterprise level possible, giving facilities managers the ability to quickly respond to problems and insights to optimize their system.

The Niagara 4 Supervisor allows multiple Niagara-based JACE® controllers, along with other IP-based controllers and field devices, to be networked together. It serves real-time graphical information to standard Web-browser clients and provides server-level functions. These functions include centralized data logging/trending, archiving to external databases, alarming, dashboarding, system navigation, master scheduling, database management, and integration with other enterprise software applications through an XML interface (oBIX standard). Also, it provides a comprehensive graphical engineering toolset for application development.

ORDERING INFORMATION

Part number	Description
SUP-0	No Niagara network – Devices only (18mo SMA req)
SUP-0-SMA-INIT	18mo initial SMA (3YR or 5YR can be substituted)
SUP-1	1 Niagara network connection (18mo SMA req)
SUP-1-SMA-INIT	18mo initial SMA (3YR or 5YR can be substituted)
SUP-2	2 Niagara network connections (18mo SMA req)
SUP-2-SMA-INIT	18mo initial SMA (3YR or 5YR can be substituted)
SUP-3	3 Niagara network connections (18mo SMA req)
SUP-3-SMA-INIT	18mo initial SMA (3YR or 5YR can be substituted)
SUP-10	10 Niagara network connections (18mo SMA req)
SUP-10-SMA-INIT	18mo initial SMA (3YR or 5YR can be substituted)
SUP-100	100 Niagara network connections (18mo SMA req)
SUP-100-SMA-INIT	18mo initial SMA (3YR or 5YR can be substituted)
SUP-UNL	Unlimited Niagara network connections (18mo SMA req)
SUP-UNL-SMA-INIT	18mo initial SMA (3YR or 5YR can be substituted)
SUP-DEMO	Niagara 4 Supervisor demo
SUP-UP-1	Adds one additional Niagara connection to Supervisor
SUP-UP-100	Upgrades small Supervisor to 100 Niagara connections
SUP-UP-UNL	Upgrades Supervisor 100 to unlimited Niagara connections
SUP-DEVICE-10	10 device core (STD drivers included)
SUP-DEVICE-25	25 device core (STD drivers included)
SUP-DEVICE-50	50 device core (STD drivers included)
SUP-DEVICE-100	100 device core (STD drivers included)
SUP-DEVICE-200	200 device core (STD drivers included)
SUP-AX	Enables Supervisor to run Niagara AX (v3.8)
SUP-[0-UNL]-SMA-[1,3,5]YR	Supervisor [0-UNL] Maintenance – [1,3,5] YR extensions

*If Maintenance coverage is not purchased for any period, the price of Maintenance for the next period for which it is purchased will be (i) the Maintenance fee for the period(s) for which Maintenance was not purchased, up to a maximum of 5 years; and (ii) the Maintenance fee for the next year.

KEY ADVANTAGES

- Centralized system management
- Quickly navigate to individual buildings using tags to diagnose problems
- Compare data between buildings
- Export system data to external databases
- Integrate BAS to other enterprise applications
- Integrate to other applications, such as work order management, analytics, etc.
- Single tool used to program JACE controllers and Supervisor
- Remotely back up JACE applications to Supervisor
- Batch provisioning of JACE firmware upgrades from Supervisor
- Robust built-in analytic capabilities supported by standard Niagara components and visualizations
- Compatibility with Niagara Analytics 2.0, adding data source, functional and mathematical programming blocks to enable sophisticated analytic algorithms

powered by

niagara framework®

SUPPORTED DRIVERS

Many open protocol IP drivers are included with Niagara 4. Others can be purchased separately à la carte. For an up-to-date list of supported drivers, visit our resource library on tridium.com.

COMPATIBILITY

In any given Niagara system, the Niagara Supervisor must be running the highest version of any Niagara instance in the architecture.

When connecting to JACEs that are running older versions of Niagara, these compatibility guidelines apply:

- **Niagara AX:** Niagara 4 Supervisors can connect to JACEs running Niagara AX versions 3.6u4, 3.7u1, 3.8R and higher.
- **R2:** Niagara AX and Niagara 4 Supervisors can connect to JACEs running R2 through the oBIX XML interface only. oBIX is included in all Niagara AX and Niagara 4 Supervisors as a means of integrating Niagara-based Release 2 (R2) JACEs. With Niagara Release 2.3.522 or higher, the oBIX driver can be added to expose all data points, schedules, trends and alarms to a Niagara AX or Niagara 4 system. This oBIX driver is both a client and a server.

PLATFORM REQUIREMENTS FOR NIAGARA 4.2

Niagara 4 Supervisors may run acceptably on lower-rated platforms, or may even require more powerful platforms, depending on the application, number of data points integrated, data poll rate, number of concurrent users, performance expectations, etc.

- **Processor:** Intel® Xeon® CPU E5-2640 x64 (or better), compatible with dual- and quad-core processors
- **Operating System:** Windows 10, 64-bit Windows 8.1 Enterprise, 2012 R2 Standard, RHEL-7
- **Memory:** 1 GB minimum, 4 GB or more recommended for larger systems
- **Hard Drive:** 4 GB minimum, more recommended depending on archiving requirements
- **Display:** Video card and monitor capable of displaying 1024 x 768 pixel resolution or greater
- **Network Support:** Ethernet adapter (10/100 Mb with RJ-45 connector)
- **Connectivity:** Full-time high-speed ISP connection recommended for remote site access (i.e., T1, ADSL, cable modem) and IPv6 compliant

Platform requirements for older versions of Niagara Supervisors are included in the Release Notes for each particular version.

SPECIFICATIONS

HTML5 and Java-enabled user interface (UI); JavaScript data interface library included (BajaScript)
Supports an unlimited number of users over the Internet / intranet with a standard Web browser (depending on the host PC resources)
Optional enterprise-level data archival using SQL, MySQL or Oracle databases and HTTP/HTML/XML, CSV or text formats
"Audit Trail" of database changes, database storage and backup, global time functions, calendar, central scheduling, control and energy management routines
Sophisticated alarm processing and routing, including email alarm acknowledging
Access to alarms, logs, graphics, schedules and configuration data with a standard Web browser
Niagara follows industry best practices for cyber security, with support for features such as strong hashed passwords, TLSv1 for secure communications and certificate management tools for authentication
HTML-based help system that includes comprehensive online system documentation
Supports multiple Niagara-based stations connected to a local Ethernet network, or the Internet
Provides online/offline use of the Niagara Framework® Workbench AX graphical configuration tool and a comprehensive Java Object Library
Optional direct Ethernet-based driver support for most Open IP field bus protocols (see supported drivers document)

The Niagara 4 Supervisor is available through a wide variety of original equipment manufacturers. Our open distribution business model and open protocol support allow a vendor-neutral application compatible with devices and systems throughout the world.

To learn more about how to purchase, install and start using the Niagara 4 Supervisor, or if you are an original equipment manufacturer and would like to add the Niagara 4 Supervisor to your suite of offerings, please contact us.

TRIDIUM **804.747.4771** Corporate HQ / **877.305.1745** Customer Support **tridium.com**

Copyright © 2016 Tridium Inc. All rights reserved. Intel and Xeon are trademarks of Intel Corporation in the U.S. and/or other countries.

Information and/or specifications published here are current as of the date of publication of this document. Tridium, Inc. reserves the right to change or modify specifications without prior notice. The latest product specifications can be found by contacting our corporate headquarters, Richmond, Virginia. Products or features contained herein may be covered by one or more U.S. or foreign patents. This document may be copied only as expressly authorized by Tridium in writing. It may not otherwise, in whole or in part, be copied, photocopied, reproduced, translated, or reduced to any electronic medium or machine-readable form.

2016-0010

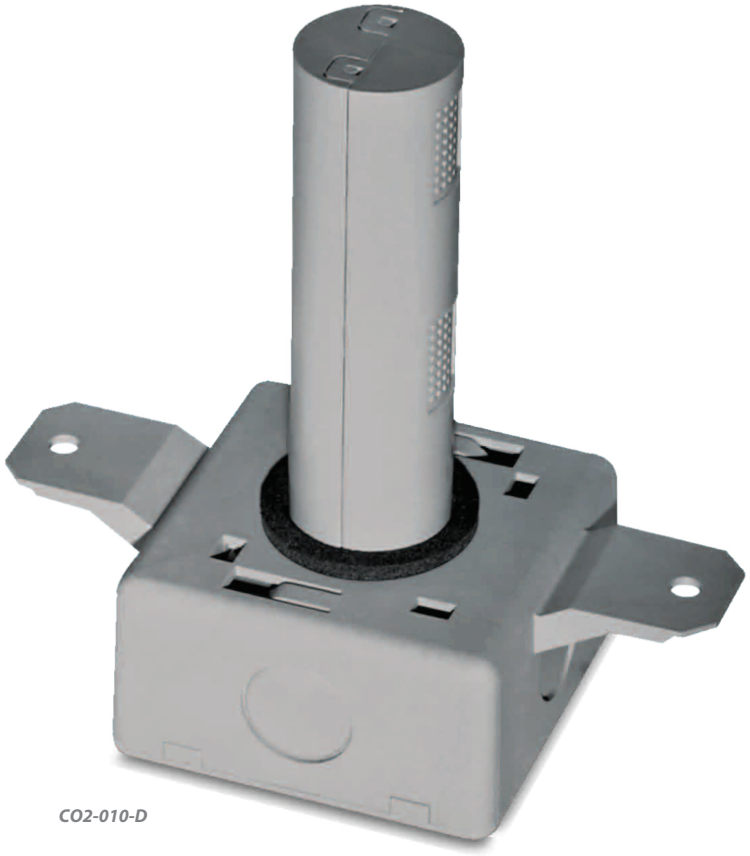

CO2-010-D

CO2 DUCT

Carbon Dioxide Sensor

The CO2-010-D monitors carbon dioxide from 0 to 2000 ppm for duct mount applications. They feature analog outputs (see order grid for output options) with a patented ABC Logic™ self-calibration system. The concentration of carbon dioxide is measured using a Single Beam, Non-Dispersive Infrared (NDIR) Absorption sensing method. They will indicate one of five approximate ppm levels. These units should not be used in environments such as greenhouses, wineries, breweries. They should also be avoided in areas where industrial sources of carbon dioxide are present or in applications where the space is left unoccupied for less than 4 hours a day.

The CO2-010-D is covered by ACI's Two (2) Year Limited Warranty. The warranty can be found in the front of ACI's Sensors & Transmitters catalog, as well as on ACI's web site, www.workaci.com.

SPECIFICATIONS

Supply Voltage	18 to 30 VAC RMS, 50/60 Hz or 18 to 42 VDC
Power Consumption (Duct)	Typical, 1.65Ω Peak, 0.65Ω Average @ 42 VDC
Measurement Range	0 to 2000 ppm
CO2 Output Signal (Duct)	0 to 10 VDC (100Ω output impedance)
Accuracy (Duct)	+/- 40 ppm +3% of Reading @ 72ºF (22ºC)
Non-Linearity	< 1% of FS @ 72ºF (22ºC)
Stability	< 2% FS over life of sensor (15 Years Typical)
Temperature Dependence	0.2% of Full Scale per ºC
Pressure Dependence	0.135% of reading per mm Hg
Response Time (Duct)	3 minutes typical for 90% Step change
Operating Temp/ RH Range	32 to 122ºF (0 to 50ºC)/0 to 95%, non-condensing
Sensor Coverage Area	7,500 sq. ft. maximum
Sensing Technology	Single beam infrared sensing tecnology (NDIR)
Product Dimensions (Duct)	(L) 3.05" (W) 3.05" (H) 5.70"

ORDERING

Select CO2-010-D as a Gas Type (A).

A Gas Type
◯ **CO2-010-D** (Duct) (0 to 10 VDC)

BUILD PART NUMBER

After completing (A) from the above table, fill in the Part Number Table below. An example part number is offered.

A

EXAMPLE: CO2-010-D

Featured Relative Humidity Resistive Product

Duct/Euro

Outside Air/Euro

Stainless Plate

Room 2

Room 2, Setpoint

Room 2, Override

Room 2, Setpoint, Override

Room

Room, Setpoint

Room, Override

Room, Setpoint, Override

RH RESISTIVE

RH with Resistive Temperature Output

The A/RH Series relative humidity transmitters (with resistive temperature output) utilize a capacitive sensing element to deliver a proportional analog output. This series features on board DIP switches which allow the user to select the desired output signal. In addition, field calibration can be performed by using the on board increment and decrement DIP switches. These enhancements provide increased flexibility and outstanding long-term performance. Duct and Outside Air configurations feature conformally coated circuit boards for moisture resistance. Several RTD and thermistor temperature sensing elements are available in this series.

The A/RH Series is covered by ACI's Five (5) Year Limited Warranty. The warranty can be found in the front of ACI's Sensors & Transmitters catalog, as well as on ACI's web site, www.workaci.com.

SPECIFICATIONS

RH Supply Voltage (4 to 20 mA)	(250 Ohm Load): 15 to 40 VDC/18 to 28 VAC
RH Supply Voltage (4 to 20 mA)	(500 Ohm Load): 18 to 40 VDC/18 to 28 VAC
RH Supply Voltage (0-5 VDC)	12 to 40 VDC/18 to 28 VAC (4K Load minimum)
RH Supply Voltage (0-10 VDC)	0-10 VDC: 18 to 40 VDC/18 to 28 VAC (4K Load minimum)
Supply Current	Voltage Output: 8 mA maximum | Current Output: 24 mA maximum
RH Measurement Range	0-100%
RH Output	2-wire: 4 to 20 mA (standard) | 3-wire: 0-5 VDC, 0-10 VDC or 4 to 20 mA
RH Accuracy @ 77ºF (25ºC)	+/- 1% over 20% span (between 20 to 90%) | +/- 2%, 3%, or 5% from 10 to 95%
Long Term Stability	Less than 2% drift/5 years
Repeatablity	0.5% RH
Sensitivity	0.1% RH
Operating Environment, Duct/Outside	0 to 100% RH | -40 to 140ºF (-40 to 60ºC)
Operating Environment, Room	0 to 95% RH (non-condensing) | 32 to 122ºF (0 to 50ºC)
RH Sensor Type	Capacitive
Temperature Specifications	See corresponding Temp data sheets
Product Dimensions (Duct/Euro)	Enclosure: (W) 3.60" (D) 2.25" | Probe: (L) 7.15"
Product Dimensions (Outside Air)	Cover: (H) 3.61" (W) 4.00" (D) 2.25" | Stem: (H) 3.00" (W) 1.13"
Product Dimensions (Room 2)	(H) 4.50" (W) 2.75" (D) 1.12"
Product Dimensions (Room)	(H) 4.51" (W) 2.75" (D) 2.90"
Product Dimensions (Stainless Plate)	Plate: (H) 4.51" (W) 2.76" (D) 0.19" | Filter: (L) 1.06"

ORDERING

Select one Series (A). If A/RH1 is selected, you must specify a 20% range. Choose a Temperature Sensor (B), one Configuration (C), & one RH Output (D). When selecting your Configuration (A), if "R2S", "RS", "RSO" or "R2SO," please choose a Pot Value (E), a Sticker (F) & a Pot Action (G). If "R2S", "RS", "RSO" or "R2SO" is not selected, your Part Number is finished after completing RH Output (D). **NOTE:** 4 to 20 mA output is not available for the SP configuration.

A Accuracy

- ◯ **A/RH1** (+/-1%) (Specify a 20% Range)
- ◯ **A/RH2** (+/-2%)
- ◯ **A/RH3** (+/-3%)
- ◯ **A/RH5** (+/-5%)

B Temp Sensor

- ◯ **100-2W**
- ◯ **100-3W**
- ◯ **3K**
- ◯ **AN** (Type III)
- ◯ **20K**
- ◯ **1K-2W**
- ◯ **1K-3W**
- ◯ **10KS**
- ◯ **CP** (Type II)
- ◯ **1.8K**
- ◯ **AN-BC**
- ◯ **1K-NI**
- ◯ **375**
- ◯ **100KS**
- ◯ **CSI**
- ◯ **10KE**
- ◯ **10KE1**

C Configuration

- ◯ **D** (Duct/Euro)
- ◯ **O** (Outside Air/Euro)
- ◯ **SP** (Stainless Plate)
- ◯ **R2** (Room)
- ◯ **R2S** (Room, Setpoint)
- ◯ **R2O** (Room, Override)
- ◯ **R2SO** (Room, Setpoint, Override)
- ◯ **R** (Room)
- ◯ **RS** (Room, Setpoint)
- ◯ **RO** (Room, Override)
- ◯ **RSO** (Room, Setpoint, Override)

D RH Output

- ◯ **----** (4 to 20 mA)
- ◯ **5** (0-5 VDC)
- ◯ **10** (0-10 VDC)

E Setpoint Pot Value

- ◯ **400**
- ◯ **1K**
- ◯ **2K**
- ◯ **3K**
- ◯ **100K**
- ◯ **5K**
- ◯ **8.5**
- ◯ **10K**
- ◯ **20K**
- ◯ **Specify Pot Value**

F Sticker

- ◯ **Blue/Red**

G Pot Action

- ◯ **DA** (Direct)
- ◯ **RA** (Reverse)

BUILD PART NUMBER

After completing (A), (B), (C), (D), (E), (F) & (G) from the above table, fill in the Part Number Table below. An example part number is offered.

A	B	C	D	E	F	G

EXAMPLE: A/RH3 - CP - D

The Euro enclosure has a UL94-V0 flammability rating.

ECLYPSE™ Connected System Controller

ECLYPSE™

Overview

The ECLYPSE Connected System Controller is a modular and scalable platform that is used to control a wide range of HVAC applications. It supports BACnet/IP communication and is a listed BACnet Building Controller (B-BC).

The ECLYPSE Connected System Controller consists of an automation and connectivity server, power supply, and I/O extension modules.

This programmable Connected System Controller provides advanced functionality such as customizable control logic, Web-based design and visualization interface (ENVYSION embedded), logging, alarming, and scheduling.

Applications

The ECLYPSE Connected System Controller is typically used as:

- A controller for medium/large sized Air Handling Units (AHU), central plant, and other applications.
- Small building server and equipment controller with embedded ENVYSION. For example, it can be used to control and serve a boiler room.

Features & Benefits

IP Communication

- Communicate over IP for increased speed. Experience faster response and save time when programming, configuring, creating and viewing graphics, and upgrading your system.
- Control technicians can connect the ECLYPSE Wi-Fi Adapter to the Connected System Controller enabling a Wi-Fi Hotspot network. The control technician can then connect wirelessly to the system using a mobile device or laptop, for faster, easier system configuration, programming, commissioning and servicing.

ENVYSION

- Embedded web-based graphic design and visualization interface. Host system-based graphics such as Air Handling Units, Boiler Room, or Central Plant directly from the controller.

- Design and create user interface directly from a standard web browser. Responsive interface design support allows a single graphic design to be automatically adapted to suit the display's screen size.
- Provides visualization for schedules, alarms, and trend logs.

Programmability

Supports Distech Controls' EC-*gfx*Program, which makes Building Automation System (BAS) programming effortless by allowing you to visually assemble building blocks together to create a custom control sequence for any HVAC / building automation application.

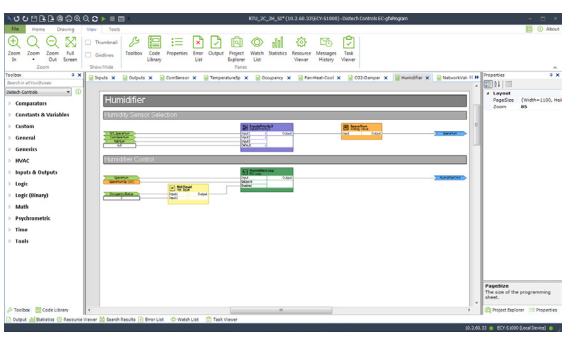

Scalable and Modular

The Connected System Controller can be expanded to support up to 20 input/output (I/O) modules (280 inputs/outputs with any combination of modules). With this flexibility, meet the requirements of any HVAC application from small to medium to large systems while being able to adapt to new requirements as the need arises.

Repeatable power supply concept can be used when more power is required to power a series of I/O modules.

Cable connection is used to connect successive rows of modules within a controls' cabinet to provide power and communication.

BACnet/IP Device

The Connected System Controller is a listed BACnet Buidling Controller (B-BC). It supports BACnet/IP communications for faster communication in comparison to the traditional twisted pair communication bus.

Alarms, Trend Log, Schedule Support

Embedded alarms, trend log and schedule support allows for fully distributed data and logic providing a more robust system. Embedded trend logs simplify system troubleshooting when compared to a centralized system.

Mobility

The ECY-S1000 can be remotely accessed to program, configure, or maintain the installation thus reducing costs associated with on-site visits. Through a mobile device or PC, the different tasks can be performed using the following free-to-use tools and interfaces:

- ENVYSION web-based graphic design and visualization interface
- EC-*gfx*Program graphical programming interface
- myDC Controls mobile application

Robust Protection

The I/O modules are protected against mis-wiring and faults to prevent damage caused by incorrect wiring or other mishaps.

The power supply module contains over-voltage and over-current output protection to protect the electronics in unstable power supply conditions and against mis-wiring.

I/O Status LEDs

The status LEDs on the I/O modules allow the user to confirm the status of the inputs/outputs and facilitate commissioning and troubleshooting.

Ease of Installation

The Connected System Controller modules are plug & play devices. They are equipped with HD-15 connectors that transmits power and communications to the next module for fast and easy assembly.

Auto-Addressing

The auto-addressing feature eliminates the need to manually assign an address to each I/O module therefore reducing installation and configuration time.

Hot-Swappable Tool-Less Design and Unique Latching Mechanism

The I/O modules are hot-swappable for replacement without interrupting power and communications to other modules.

The front assembly of I/O modules separate from the wiring base by pushing the two latches up to unlock a module's front assembly and then opening and pulling the hinged gull-wing covers. The latch design locks the front assembly to the wiring base.

The hinged gull-wing design protects and cover the stacked dual row detachable I/O terminal strips.

Color-Coded I/O

Terminal blocks are uniquely identified and color-coded for clarity and to prevent wiring mistakes.

Hand/Off/Auto Switches and Potentiometers

The front assembly of Hand/Off/Auto (HOA) equipped I/O models allow users to override the control outputs for commissioning and maintenance purposes.

Potentiometers provide manual analog signal and output control to override voltage or current signal.

High-Efficiency Design

The power supply uses the latest high-efficiency switch-mode circuitry to make more power available to operate additional modules and for cooler operation.

Model Selection

The ECLYPSE Connected System Controller consists of a power supply, an automation and connectivity server, and I/O extension modules. The different models for each are shown in the tables below.

Power Supply

ECY-PS24	24VAC/VDC power supply module for the ECY-S1000. A power supply module must be added after each HD15 cable (see Accessories below).

Automation and Connectivity Servers

ECY-S1000	Connected System Controller for medium/large sized AHU and plant applications and small building server/controller applications. Supports up to 20 ECY I/O extension modules.
ECY-S1000 with ENVYSION	Connected System Controller for medium/large sized AHU and plant applications and small building server/controller applications. Embedded ENVYSION Studio & Viewer. Supports up to 20 ECY I/O extension modules.

Accessories

ECLYPSE HD15 Cable	6ft (1.8m) cable for Connected System Controller multiple-row panel installations. An HD15 cable must always be followed by an ECY-PS24 power supply module. For more information, refer to the Hardware Installation Guide.

I/O Modules

	Universal Inputs									Universal Outputs							Basic Power Consumption[2], W
	Quantity	Contact	Counter	0 to 10VDC	0 to 5VDC	0 to 20mA	Resistance	Thermistor	18VDC Power Supply	Quantity	0 or 12VDC	PWM	Floating	0 to 10VDC[1]	0 to 20mA[1]	HOA	
ECY-8UI/6UO	8	■	■	■	■	■	■	■	■	6	■	■	■	■	UO1 UO2 UO3		0.94
ECY-8UI/6UO.HOA	8	■	■	■	■	■	■	■	■	6	■	■	■	■	UO1 UO2 UO3	■	0.94

1. 0 to 10VDC is available on UO1 to UO6. 0 to 20 mA is available on UO1, UO2, and UO3; this option is individually selected through an on-board DIP switch setting.
2. External loads excluded. See the ECLYPSE Selection Tool to calculate the number of Input/Output Extension Modules that can operate with a power supply.

Product Specifications

Power Supply (ECY-PS24)

Power Supply Input

Voltage Range	24VAC/DC; ±15%; Class 2
Power Consumption	60VA typical plus all external loads[1]
	100VA maximum
Frequency Range	50 to 60Hz
Over Voltage Input Protection	Field replaceable fuse
Fuse Type	4A, fast-acting, 5 × 20mm (GMA-4A)

Power Supply Output

DC Voltage	18VDC regulated
Rated Current Range	0 to 1.6A
Rated Power	30W[1]

1. The total power consumption of all modules connected to the right of this power supply, and up to the next connected power supply, including any connected loads, must be less than this value. A separate transformer rated at 60VA minimum must be used for each ECY-PS24 power supply for it to operate at full capacity.

Hardware

Power Distribution Direction	Powered modules are connected to the right
Backplane Bus	Pass-through connection for data and control signals
Status Indicator	Green LED: power status

Mechanical

Dimensions	2.85 W × 4.74 H × 2.31” D (72.38 × 120.31 × 58.56mm)

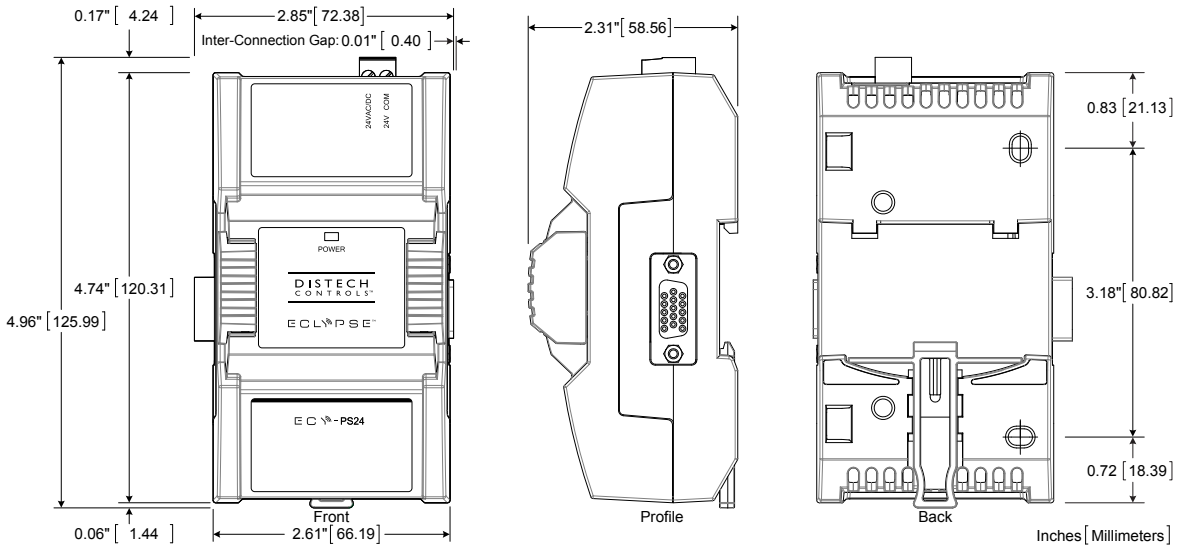

Shipping weight	0.75lbs (0.34kg)

Power Supply (cont'd)

Mounting	DIN rail or screw mounting
Enclosure Material[1]	FR/ABS
Enclosure Rating	Plastic housing, UL94-V0 flammability rating Plenum rating per UL1995

1. All materials and manufacturing processes comply with the RoHS directive and are marked according to the Waste Electrical and Electronic Equipment (WEEE) directive.

Environmental

Operating Temperature	32ºF to 122ºF (0ºC to 50ºC)
Storage Temperature	-22ºF to 158ºF (-30ºC to 70ºC)
Relative Humidity	0 to 90% Non-condensing
Ingress Protection Rating	IP20
Nema Rating	1

Standards and Regulations

CE:

☐ Emission	EN61000-6-3: 2007; A1:2011; Generic standards for residential, commercial and light-industrial environments
☐ Immunity	EN61000-6-1: 2007; Generic standards for residential, commercial and light-industrial environments
FCC	This device complies with FCC rules part 15, subpart B, class B
UL Listed (CDN & US)	UL916 Energy management equipment

Automation and Connectivity Server (ECY-S1000)

Power Supply Input

Voltage	18VDC
Power Consumption	8.9W; external loads excluded

Communications

Ethernet Connection Speed	10/100 Mbps
BACnet Profile	BACnet Building Controller (B-BC)
BACnet Interconnectivity	BBMD forwarding capabilities
BACnet Transport Layer	IP
BACnet Listing	BTL
Web Server Protocol	HTML5
Web Server Application Interface	REST API

Optional Supported Wireless Connectivity:

☐ Wi-Fi Communication Protocol	IEEE 802.11a/b/g/n and 802.11s
☐ Wi-Fi Network Types	Client, Access Point, Hotspot

Automation and Connectivity Server (cont'd)

Hardware

Processor	Sitara ARM processor
CPU Speed	1GHz
Memory	4GB Non-volatile Flash (applications & storage)
	512MB RAM
Real Time Clock (RTC)	Real Time Clock with rechargeable battery
	Supports SNTP network time synchronization
RTC Battery	20 hours charge time, 20 days discharge time
	Up to 500 charge / discharge cycles
Communications Ports:	
☐ Ethernet	2 switched RJ-45 Ethernet ports
☐ USB Connections	2 × USB 2.0 Ports
	1 × Micro-USB 2.0 Ports
☐ RS-485 Serial Communications	Screw terminals
☐ Subnet	RJ-45
Status Indicators	Green LEDs: power status & LAN Tx
	Orange LEDs: controller status & LAN Rx

Mechanical

Dimensions	3.57 W × 4.74 H × 2.31" D (90.67 × 120.31 × 58.56mm)

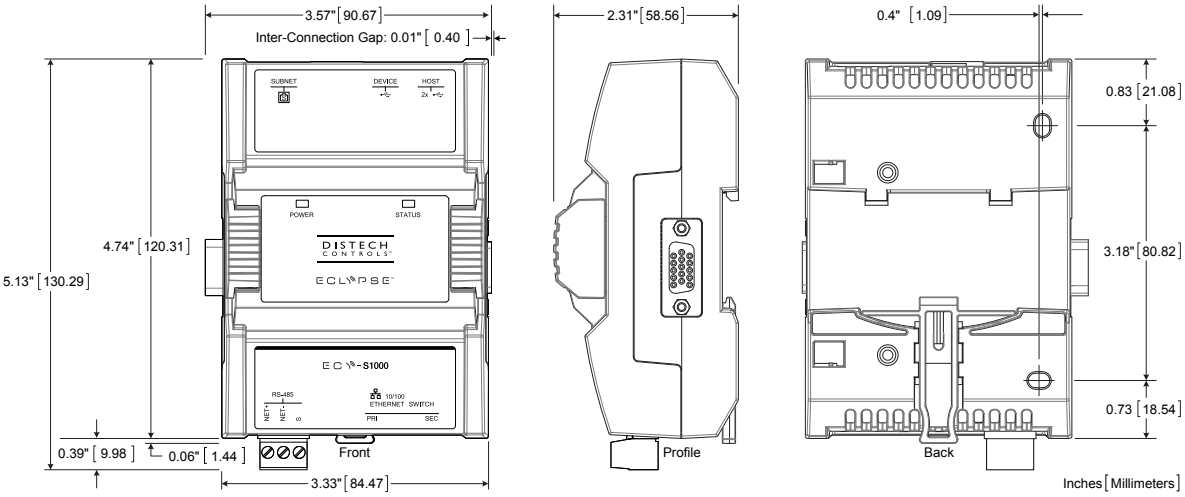

Shipping weight	0.85lbs (0.39kg)
Mounting	DIN rail or screw mounting
Enclosure Material	FR/ABS
Enclosure Rating[1]	Plastic housing, UL94-V0 flammability rating
	Plenum rating per UL1995

1. All materials and manufacturing processes comply with the RoHS directive and are marked according to the Waste Electrical and Electronic Equipment (WEEE) directive.

Automation and Connectivity Server (cont'd)

Environmental

Operating Temperature	32ºF to 122ºF (0ºC to 50ºC)
Storage Temperature	-22ºF to 158ºF (-30ºC to 70ºC)
Relative Humidity	0 to 90% Non-condensing
Ingress Protection Rating	IP20
Nema Rating	1

Standards and Regulations

CE:

☐ Emission	EN61000-6-3: 2007; A1:2011; Generic standards for residential, commercial and light-industrial environments
☐ Immunity	EN61000-6-1: 2007; Generic standards for residential, commercial and light-industrial environments
FCC	This device complies with FCC rules part 15, subpart B, class B
UL Listed (CDN & US)	UL916 Energy management equipment

I/O Modules

Power Supply Input

Voltage	18VDC
Power Consumption	Calculate power supply requirements with the ECLYPSE Selection Tool

Hardware

Status Indicator	Green LEDs: inputs and outputs
Enclosure Material	FR/ABS

Mechanical

Dimensions	3.20 W × 4.74 H × 2.31" D (81.17 × 120.31 × 58.56mm)

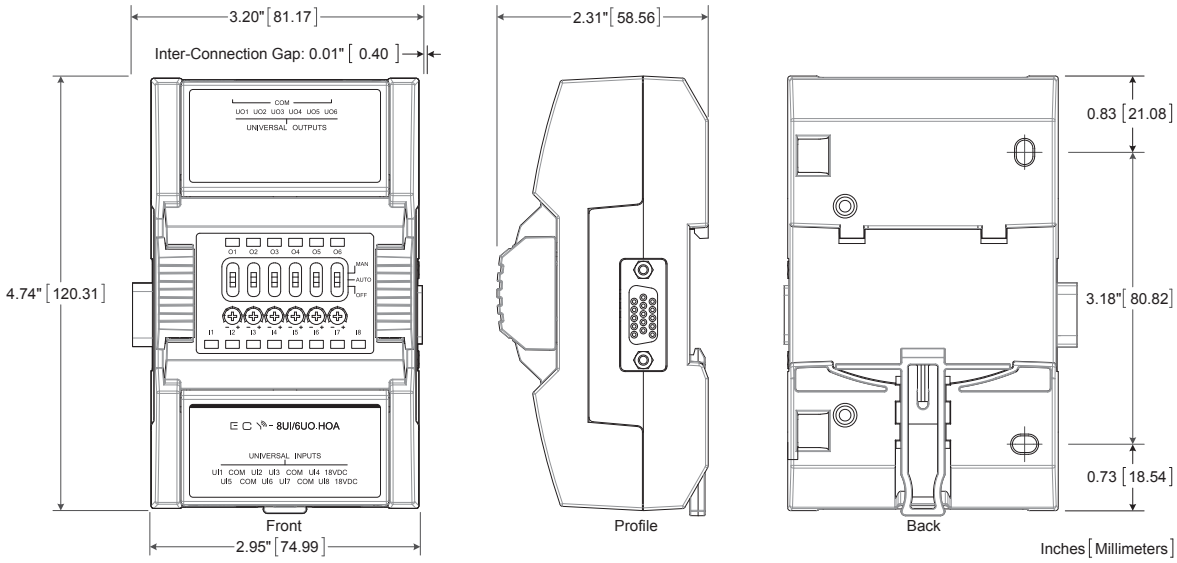

I/O Modules (cont'd)

Shipping weight	0.85lbs (0.39kg)
Mounting	DIN rail or screw mounting
Enclosure Material	FR/ABS
Enclosure Rating[1]	Plastic housing, UL94-V0 flammability rating
	Plenum rating per UL1995

1. All materials and manufacturing processes comply with the RoHS directive and are marked according to the Waste Electrical and Electronic Equipment (WEEE) directive

Environmental

Operating Temperature	32ºF to 122ºF (0ºC to 50ºC)
Storage Temperature	-22ºF to 158ºF (-30ºC to 70ºC)
Relative Humidity	0 to 90% Non-condensing
Ingress Protection Rating	IP20
Nema Rating	1

Standards and Regulations

CE:

☐ Emission	EN61000-6-3: 2007; A1:2011; Generic standards for residential, commercial and light-industrial environments
☐ Immunity	EN61000-6-1: 2007; Generic standards for residential, commercial and light-industrial environments
FCC	This device complies with FCC rules part 15, subpart B, class B
UL Listed (CDN & US)	UL916 Energy management equipment

I/O Modules - Universal Inputs (UI)

General

Input Type	Universal; software configurable
Current Input Option Selection	DIP switch
Input Resolution	16-bit analog to digital converter
Power Supply Output	18VDC; 20mA maximum per 0 to 20 mA input

Contact

Type	Dry contact

Counter

Type	Dry contact
Maximum Frequency	1Hz maximum,
Minimum Duty Cycle	500milliseconds On / 500milliseconds Off

0 to 10VDC

Range	0 to 10VDC (40kΩ input impedance)

0 to 5VDC

Range	0 to 5VDC (high input impedance)

0 to 20mA

Range	0 to 20mA
	249Ω DIP-switch configurable internal resistor

Resistance/Thermistor

Range	0 to 350 KΩ.
Supported Thermistor Types	Any that operate in this range

Pre-configured Temperature Sensor Types:

☐ Thermistor	10KΩ Type 2, 3 (10KΩ @ 77ºF; 25ºC)
☐ Platinum	Pt1000 (1KΩ @ 32ºF; 0ºC)
☐ Nickel	RTD Ni1000 (1KΩ @ 32ºF; 0ºC)
	RTD Ni1000 (1KΩ @ 69.8ºF; 21ºC)

I/O Modules - Universal Outputs (UO)

General

Output Type	Universal; software configurable
Output Resolution	10-bit digital to analog Converter
Output Protection	Built-in snubbing diode to protect against back-EMF, when used with a 12VDC relay
Load Resistance	Minimum 200Ω for 0 to 10VDC and 0 to 12VDC outputs Maximum 500Ω for 0 to 20mA output
Auto-reset Fuse	20mA maximum per 0 to 60 mA output @ 140ºF; 60ºC 33mA maximum per 0 to 100 mA output @ 68ºF; 20ºC

0 or 12VDC (On/Off)

Range	0 or 12VDC

PWM

Range	Adjustable period from 2 to 65seconds

Floating

Minimum Pulse On/Off Time	500milliseconds,
Drive Time Period	Adjustable

0 to 10VDC

Range	0 to 10VDC linear

0 to 20mA

Range	0 to 20mA
Current Source	20mA maximum per 0 to 20 mA output
Ports UO1, UO2, and UO3 only	DIP switch

HOA

Hand-Off-Auto switch	When equipped Supervision allows control logic to read the current HOA switch and potentiometer settings
Threshold	Configurable
Potentiometer voltage range	0 to 12VDC

Specifications subject to change without notice.
ECLYPSE, Distech Controls, and the Distech Controls logo are trademarks of Distech Controls Inc. BACnet is a registered trademark of ASHRAE; BTL is a registered trademark of the BACnet Manufacturers Association. All other trademarks are property of their respective owner.
©, Distech Controls Inc., 2014. All rights reserved.

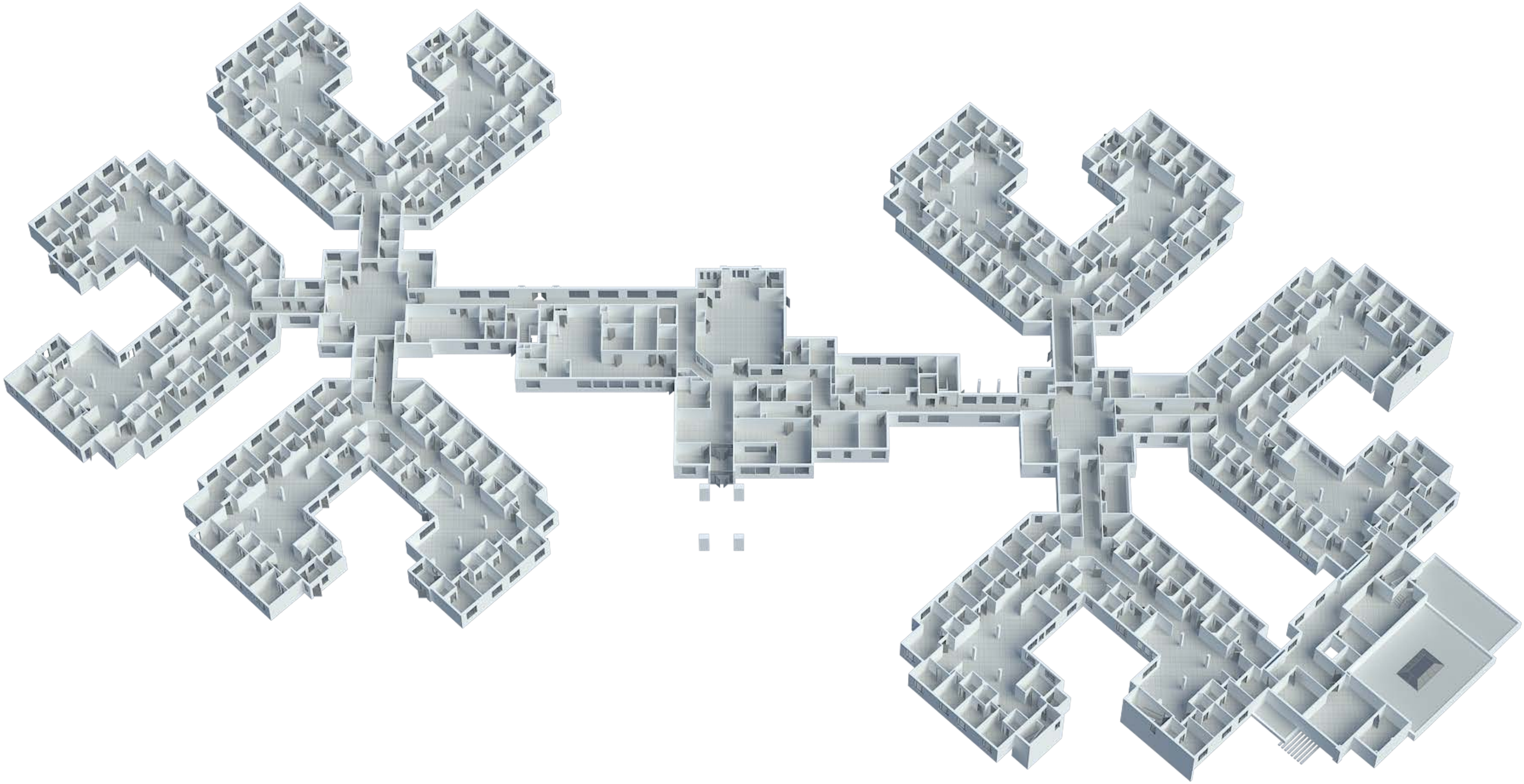

G680C, 2-Way, Pressure Compensated Flanged Globe Valve

Application

This valve is typically used in large air handling units on heating or cooling coils. This valve is suitable for use in a hydronic system with variable flow. Bronze or stainless steel trim valves can be used for steam applications, depending on actuator and close-off combination.

Suitable Actuators

	Non-Spring	Spring	Electronic Fail-Safe
G680C	EVB(X)	AFB(X)	AVKB(X)

Technical Data

Service	chilled or hot water, up to 60% glycol, steam
Flow Characteristic	equal percentage
Controllable Flow Range	stem up - open A to AB
Size [mm]	3” [80]
End Fitting	125 lb. flanged
Body	Cast Iron - ASTM A126 Class B
Stem	stainless steel
Stem Packing	NLP EPDM (no lip packing)
Seat	316 stainless steel
Plug	brass
Body Pressure Rating [psi]	ANSI 125
ANSI Class	ANSI 125 (up to 175 psi below 150°F)
Number of Bolt Holes	4
Max Inlet Pressure (Water)	150 psi (1034 kPa) @ 250°F
Max Inlet Pressure (Steam)	35 psi (241 kPa)
Media Temperature Range (Water)	32°F to 338°F [0°C to 138°C]
Media Temperature Range (Steam)	32°F to 280°F [0°C to 138°C]
Maximum Differential Pressure (Steam)	15 psi (103 kPa)
Max Differential Pressure (Water)	25 psi (172 kPa)
Rangeability	91:1
Cv	90
Weight	75 lb [34 kg]
Leakage	ANSI Class III
Servicing	Repack/Rebuild kits available

Dimensions (Inches [mm])

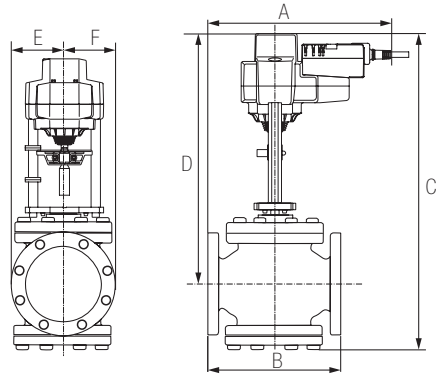

EVB, EVX, RVB, RVX

A	B	C	D	E	F
12.2” [310]	10” [254]	24.64” [626]	19.25” [489]	3.94” [100]	

Piping

The valves should be mounted in a weather-protected area in a location that is within the ambient limits of the actuator. Allow sufficient room for valve with actuator and for service. The preferred mounting position of the valve is with the valve stem vertical above the valve body, for maximum life. However, the assemblies can be mounted with valve stem vertical above the valve or up to 45 degrees in relation to the horizontal pipe. The actuators should never be mounted underneath the valve, as condensation can build up and result in a failure of the actuators. Do not reverse flow direction.

Flow Pattern

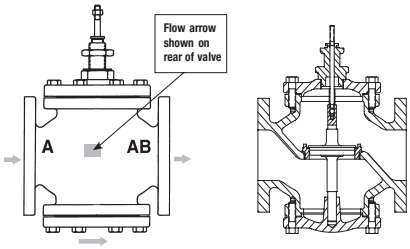

Date created, 09/01/2016 - Subject to change. © Belimo Aircontrols (USA), Inc.

G680C, 2-Way, Pressure Compensated Flanged Globe Valve

Dimensions (Inches [mm])

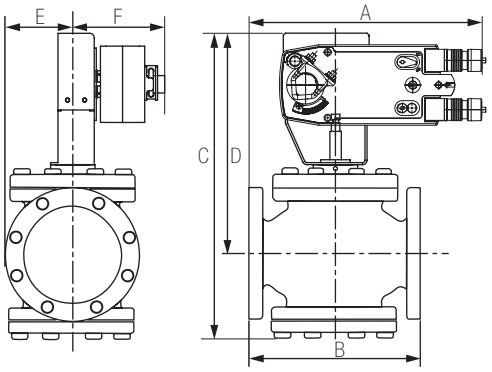

AFB, AFX

A	B	C	D	E	F
12.2” [310]	10” [254]	22.77” [577]	17.85” [453]	3.94” [100]	5.25” [135]

Dimensions (Inches [mm])

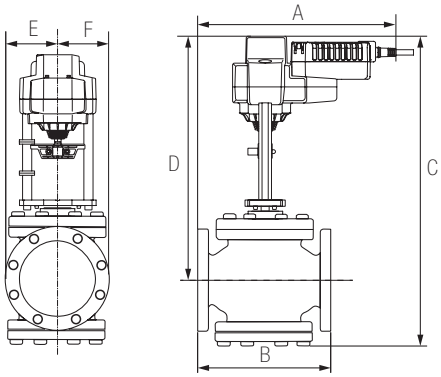

AVKB, AVKX

A	B	C	D	E	F
12.2” [310]	10” [254]	24.64” [626]	19.25” [489]	3.94” [100]	

Date created, 09/01/2016 - Subject to change. © Belimo Aircontrols (USA), Inc.

EVB24-SR

Modulating, Non-Spring Return, Linear, 24 V, for 2 to 10 VDC or 4 to 20 mA

Technical Data	
Power Supply	24 VAC ± 20%, 50/60 Hz, 24 VDC ± 10%
Power Consumption Running	5 W
Power Consumption Holding	1.5 W
Transformer Sizing	7.5 VA (class 2 power source)
Electrical Connection	3 ft, 18 GA plenum rated cable with 1/2" conduit connector protected NEMA 2 (IP54)
Overload Protection	electronic throughout full stroke
Electrical Protection	actuators are double insulated
Operating Range Y	2 to 10 VDC, 4 to 20 mA w/ ZG-R01 (500 Ω, 1/4 W resistor)
Input Impedance	100 k Ω for 2 to 10 VDC (0.1 mA), 500 Ω for 4 to 20 mA
Feedback Output U	2 to 10 VDC
Stroke	2" [50 mm]
Linear Force	562 lbf [2500 N force]
Direction of Rotation (Motor)	reversible with built-in switch
Position Indication	stroke indicator on bracket
Manual Override	5 mm hex crank (3/16" Allen), supplied
Running Time (Motor)	90 sec, constant independent of load
Humidity	5 to 95% RH non-condensing
Ambient Temperature Range	-22°F to 122°F [-30°C to 50°C]
Storage Temperature Range	-40°F to 176°F [-40°C to 80°C]
Housing	NEMA 2, IP54, UL enclosure type 2
Housing Material	Aluminum die cast and plastic casing
Agency Listings†	cULus acc. to UL60730-1A/-2-14, CAN/CSA E60730-1:02, CE acc. to 2004/108/EC and 2006/95/EC
Noise Level (Motor)	<60 dB (A)
Servicing	maintenance free
Quality Standard	ISO 9001
Weight	5.7 lb [2.6 kg]

† Use flexible metal conduit. Push the listed conduit fitting device over the actuator's cable to butt against the enclosure. Screw in conduit connector. Jacket the actuators input wiring with listed flexible conduit. Properly terminate the conduit in a suitable junction box. Rated impulse Voltage 800V. Type of action 1. Control pollution degree 3.

Date created, 11/03/2016 - Subject to change. © Belimo Aircontrols (USA), Inc.

Wiring Diagrams

INSTALLATION NOTES

3 Actuators may also be powered by 24 VDC.

7 A 500 Ω resistor (ZG-R01) converts the 4 to 20 mA control signal to 2 to 10 VDC.

18 Actuators with plenum cable do not have numbers; use color codes instead.

Meets cULus requirements without the need of an electrical ground connection.

WARNING! LIVE ELECTRICAL COMPONENTS!

During installation, testing, servicing and troubleshooting of this product, it may be necessary to work with live electrical components. Have a qualified licensed electrician or other individual who has been properly trained in handling live electrical components perform these tasks. Failure to follow all electrical safety precautions when exposed to live electrical components could result in death or serious injury.

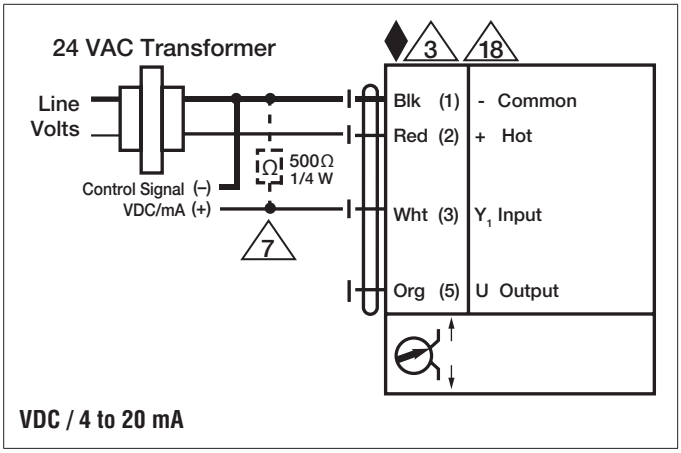

VDC / 4 to 20 mA

Date created, 11/03/2016 - Subject to change. © Belimo Aircontrols (USA), Inc.

HAWK 4000 Boiler Control System
Sample Specifications

Part 1 – General:

1.1 Description

A. Each unit shall be factory equipped with a Boiler Control System providing technology and functions equal to the Cleaver Brooks Hawk 4000 Boiler Control system.

B. Each Boiler Control System shall be factory equipped with a pre-configured Programmable Controller and a 10 inch color touch screen Human Machine Interface (HMI).

Part 2 - Products:

2.1 Major System Components

A. Major system components shall include:

1. Rockwell/Allen Bradley Compact Logix Programmable Control Processor.
2. 10 Inch Panel View Plus Color Touch Screen HMI.
3. Local Modbus network for communications with Parallel Positioning Actuators, Burner Management Control and optional Variable Speed Drive, and
4. Various Controller Input/Output Modules.
5. One Burner Management Controller and Wiring Sub-Base.
6. One Flame Scanner: Infrared, Ultra-Violet, or UV Self-Check.
7. One Flame Amplifier, to correspond with the selected Flame Scanner.
8. Various Temperature and Pressure Sensors.
9. Alarm Bell

B. Major functions that the Boiler Control System shall provide:

1. Automatic sequencing of the boiler through standby, pre-purge, pilot flame establishing period, main flame establishing period, run and post purge.
2. Flame proving and lockout on flame failure during pilot flame proving, main flame proving, or run.
3. Low fire damper/valve position for flame ignition trials.
4. Parallel Positioning Combustion Control for Air and maximum 3 Fuels
5. Optional Variable Speed Drive on Combustion Air Fan Blower Motor
6. Optional O2 Trim (Air Trim)
7. Integrated Draft Control (requires external damper, low draft switch and draft transmitter. *CB damper assembly includes these items as a standard*)
8. Utilize solid state controls and sensors to provide various control functions, such as:
   a. Parallel Positioning Full Modulation
   b. Modulating Control algorithm shall be Proportional-Integral-Derivative (PID) type.
   c. Thermal Shock Protection with water temperature monitoring and set point.
   d. Various High and Low limit alarms and shutdowns.

9. Touch Screen graphical operator interface and monitoring.
   a. Minimum 10 Inch Panel View Plus Color HMI.
   b. Manual control of the boiler-firing rate utilizing control screens on the HMI to increment and decrement the firing rate.
   c. Interface to commission boilers combustion and other system set points
   d. On screen real-time display of all connected process parameters.
   e. On screen commissioning of boiler set points and configurable alarms
   f. On screen display of system alarms and faults.
   g. On screen water level indication (Steam if CB Level Master is used) and alarm(s)

10. E-mail of boiler alarms.
11. Basic Remote Monitoring Only Web Server

12. Building/Plant Automation System interface (May require the CB-PT or Field Server based on the protocol used)
13. High Stack Flue Gas Temperature Monitoring, Cut-Off and Alarm
14. Tamper resistant control logic and password protection.
15. Dual Set Point (Night/Day Set Back) Capabilities.
16. Combustion Air Temperature (Optional).
17. Boiler Shell Water Temperature (Steam Boilers).
18. Boiler Drum Water Level Indication (Steam Boilers – Optional)
19. Outdoor Reset for Hot Water Boilers (Optional).
20. Return Hot Water Temperature (optional and only if outdoor reset is not used)
21. Remote Modulation (Not available if two boiler Lead/Lag is used)
22. Remote Firing Rate Set Point control (optional and only if Remote Modulation is not used. Not available if two boiler lead/lag is used)
23. Assured Low Fire Cut-Off (ALFCO). (Used to remote stop/start the burner)
24. 2 Boiler Lead/Lag (Optional – Common Header Transmitter required)
25. Hot Stand By
26. PLC based expanded diagnostics with 3 Auxiliary Discrete (Digital) inputs (Only 2 available if draft control is used)
27. Optional Single Point (jack shaft) Control
28. Optional Low-Hi-Low Control on Oil / Full Modulation on Gas
29. Alarm Silencer via touch screen HMI

C. The Boiler Control System shall provide the following safety provisions for:

1. Integrated Burner Management
   a. Examine all load terminals to assure it is capable of recognizing the true status of the external controls, limits and interlocks. If any input fails this test, the burner management system should lockout on safety shutdown.
   b. Closed-loop logic test verifies integrity of safety critical loads (ignition, pilot, and main fuel valves) and must be able to lockout on safety. shutdown if any safety critical load is identified as proper or improper.
   c. Pre-ignition interlocks (fuel valve proof of closure, etc.) and flames signal checked during Standby and Pre-Purge.
   d. Dynamic checking of the flame signal amplifier. The control flame signal amplifier must be able to recognize a no flame signal during this dynamic amplifier check.
   e. Safe start check and expand check to include monitoring flame signal during standby.
   f. High and Low fire switches checked for proper sequencing.
   g. Tamper-proof Purge Timing and safety logic.

2. Integrated Boiler Operating Controls and Security features
   a. Operating and Modulating Control.
   b. Password protection of Programmable Controller logic.
   c. Password protection of Parallel Positioning Set Up and Commissioning screens
   d. Password protection of Critical Set Point Screens

3. The Boiler Control System shall provide annunciation and diagnostics:
   a. Active Alarm Annunciation
   b. Provide historical alarm information for on screen display
   c. Indication of failures at start up or during normal operation.
   d. Capability of alarm history of date, time, cycle of occurrence and date and time of acknowledgement up to the most recent 100 faults.
   e. Detects and isolates an alarm, and reports internal circuit faults.
   f. Primary and Secondary Low Water Shutdown and Alarms.

4. The Boiler Control System shall be able to operate in these environmental conditions.
   a. Supply Voltage: 120vac (+10%/-15%) 50 or 60 Hz.

b. Maximum total connected load:2000 VA.
c. Operating temperature limits: 32 to 130 F
d. 85% RH continuous, non-condensing, humidity.
e. 0.5G continuous vibration.

5. All Boiler Control System wiring shall be in accordance with the National Electrical Codes and local electrical codes.

6. System shall meet current NFP85 requirements

7. Boiler Control System component functions shall be as follows:
   a. Burner Management Controller: Provides boiler sequencing logic to meet FM/IRI/UL approval body requirements.
   b. Touch Screen Graphical Interface (10 Inch Color Minimum): Provides user interface to the control system, boiler overview screen with connected boiler parameter readouts, alarm screens, optional water level indication , and system firing rate screen.
   c. Local Modbus Communication Network for communication with Parallel Positioning Actuators, Burner Management System, and optional Variable Speed Drive
   d. Various Programmable Controller Input/Output modules: Provides interface for discrete powered and/or isolated relay signals, as well as for analog signals, to and from external devices.
   e. Stack Temperature Sensor: Measures and transmits a signal to the Programmable Controller in relation to boiler exit flue gas temperature for indication. Also used for high stack temperature alarm and shutdown.
   f. Steam Pressure Transmitter for Steam Boilers: Provides an analog signal to the Programmable Controller for indication of boiler steam pressure. Utilized for on/off and modulating control of the burner.
   g. Water Temperature Transmitter for Hot Water Boilers: Provides an analog signal to the Programmable Controller for indication of boiler water temperature. Utilized for thermal shock protection, on/off, and modulating control of the burner.
   h. Water (shell) Temperature Sensor on Steam Boilers: Measures and transmits a signal to the Programmable Controller in relation to boiler water temperature. Used for indication and thermal shock protection.

8. Optional Equipment/Features (also see individual Boiler Book sections below)
   a. Two Boiler Lead/Lag (Requires common header transmitter)
   b. CB Master Panel Control Lead/Lag Control for 3-8 Multiple Boiler Systems
   c. Low-Hi-Low Control for Oil/Full Modulation on Gas
   d. Combustion Air Temperature Sensor: Measures and transmits a signal to the Programmable Controller in relation to the combustion inlet temperature for indication.
   e. CB Level Master and On Screen Level Indication
   f. Remote Firing Rate (modulation) input (not available if 2 Boiler Lead/Lag is used)
   g. Remote Firing Rate Set Point input (If Remote Firing Rate is not used, not available if 2 boiler Lead/Lag is used)
   h. Outdoor Temperature Reset (Hot Water)
   i. Hot Water Return Temperature (Hot Water Boilers and if Outdoor Temperature is not used)
   j. E-Mailing of Alarms Capabilities.
   k. Building/Plant Automation System interface (May require the CB-PT or Field Server based on the communication protocol required)
   l. Remote Monitoring and Data Acquisition System (SCADA)
   m. Revert to Pilot
   n. External Control Interlock (Example: Fresh Air Damper)
   o. Economizer Flue Gas Inlet/Outlet Temperature

p. Stack Draft Control (requires external damper, low draft switch and draft transmitter. *CB damper assembly includes these items as a standard*)
q. Steam Flow measurement input. (Requires Flow Meter) If input is not used it is defaulted to a 4-20 ma user defined input (monitoring only).
r. Feedwater Flow measurement input. (Requires Flow Meter) If input is not used it is defaulted to a 4-20 ma user defined input (monitoring only).
s. Fuel One Flow measurement input. (Requires Flow Meter) If input is not used it is defaulted to a 4-20 ma user defined input (monitoring only).
t. Fuel Two Flow measurement input. (Requires Flow Meter) If input is not used it is defaulted to a 4-20 ma user defined input (monitoring only).
u. Combustion Air Flow measurement input. (Requires Flow Meter) If input is not used it is defaulted to a 4-20 ma user defined input (monitoring only).
v. Economizer Feedwater Inlet Temperature Input. (Requires Sensor) If input is not used it is defaulted to a 4-20 ma user defined input (monitoring only).
w. Economizer Feedwater Outlet Temperature Input. (Requires Sensor) If input is not used it is defaulted to a 4-20 ma user defined input (monitoring only).
x. Feedwater Control Valve output. Used with Drum Level control options.
y. 2 Element Feedwater Control. Requires Steam Flow Input with Flow Meter, and Level Control (CB Level Master)
z. 3 Element Feedwater Control. Requires Steam Flow Input with Flow Meter, Feedwater Flow Input with Flow Meter, and Level Control (CB Level Master)
aa. Full Metering Control. Requires Fuel Flow Input with Flow Meter and Combustion Air Flow with Flow Meters
bb. Economizer Control

SUN SHIELD

Shield for Sun/Weather Protection

The ACI Sun Shield is a reliable solution for protecting temperature and relative humidity sensors. It consists of nine molded plastic plates which provide maximum airflow around the sensor while at the same time minimizing direct exposure to sunlight. The passive shield is shaped to allow natural air convection around the sensor, ensuring that the air temperature inside the shield is a good representation of the outside air. The shield also provides protection from rain and snow.

The ACI SUN SHIELD is covered by ACI's Five (5) Year Limited Warranty. The warranty can be found in the front of ACI's Sensors & Transmitters catalog, as well as on ACI's web site, www.workaci.com.

SPECIFICATIONS

Product Dimensions	(W) 9.38" (H) 15.76"

For Relative supply voltage and performance specifications, see corresponding Humidity Specification sheets.

ORDERING

Please select a Temperature Option (A) for either a Humidity Sensor (Blue Part Number) or Temperature Sensor (Orange Part Number). **NOTE:** The SUN SHIELD mounts directly to piping or building structures with the bracket hardware, and includes a water-tight fitting for wiring.

A Temperature Option

◯ **----** (None)	◯ **1.8K** (1.8K Ohm Thermistor)	◯ **100** (100 Ohm Thermistor)
◯ **CP** (10K Ohm Thermistor, Type II)	◯ **100KS** (100KS Ohm Thermistor)	◯ **1K** (1000 Ohm Thermistor)
◯ **AN** (10K Ohm Thermistor, Type III)	◯ **10KS** (10K Ohm Thermistor)	◯ **TT100** (Temperature Transmitter, 100 Ohm)
◯ **20K** (20K Ohm Thermistor)	◯ **3K** (3K Ohm Thermistor)	◯ **TT1K** (Temperature Transmitter, 1000 Ohm)

BUILD PART NUMBER

After completing (A) from the above table, fill in either the Humidity Part Number Table or the Temperature Part Number Table below. The "Sensor Series, Accuracy, NEMA 4X & Classification" are factory defaults. An example part number is offered.

A/RH	–	2%	–		–	O	–	SUN
SENSOR SERIES		ACCURACY		A		NEMA 4X		CLASSIFICATION

EXAMPLE: A/RH - 2% - AN - O - SUN

A/	–		–	O	–	SUN
SENSOR SERIES		A		NEMA 4X		CLASSIFICATION

EXAMPLE: A/ - CP - O - SUN

Northern Zone Glass Package Thermal Performance

Glazing	Window Style	Total Unit U-Value[1]	Visible Light Transmittance[2]		Daylight Transmittance[3]	Tdw-ISO[4]	SHGC[5]		Condensation Resistance[6]
			Grids	No Grids			Grids	No Grids	
Low-e glass, low-conductance spacer and argon gas fill.	Double-Hung	0.28	0.44	0.50	71%	0.462	0.37	0.41	59
	Single-Hung	0.29	0.44	0.50	71%	0.462	0.37	0.41	58
	Picture	0.26	0.49	0.55	71%	0.443	0.37	0.41	62
	Geometric	0.25	0.51	0.57	71%	0.443	0.39	0.44	61
	Casement	0.29	0.41	0.45	71%	0.443	0.34	0.37	58
	Casement Picture	0.26	0.48	0.54	64%	0.443	0.40	0.44	58
	Awning	0.29	0.41	0.46	71%	0.443	0.35	0.38	57
	2-Lite Slider	0.28	0.42	0.48	71%	0.443	0.29	0.32	60
	Patio Door - Aluminum Sill	0.31	0.42	0.49	71%	0.443	0.35	0.40	54
	Patio Door - Vinyl Sill	0.31	0.42	0.49	71%	0.443	0.36	0.41	56
	Transom / Sidelite	0.26	0.55	0.61	71%	0.443	0.35	0.39	62

Single-Hung

Vertical Detail

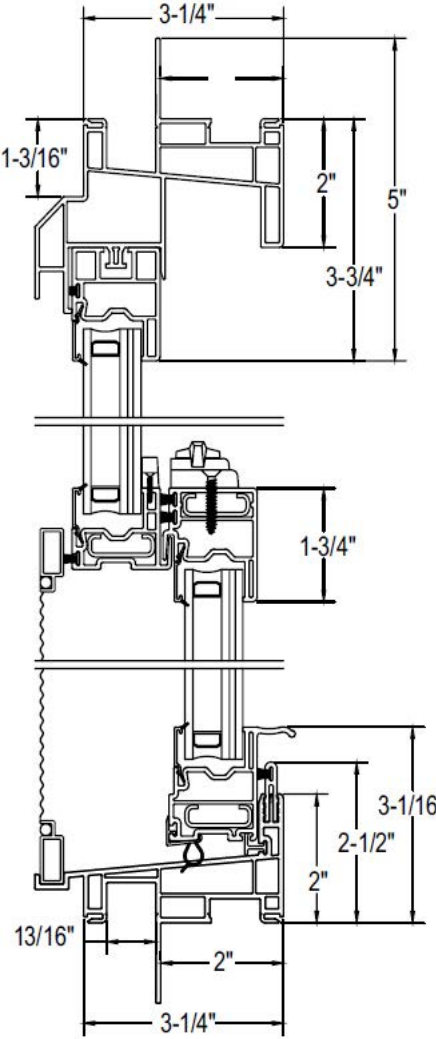

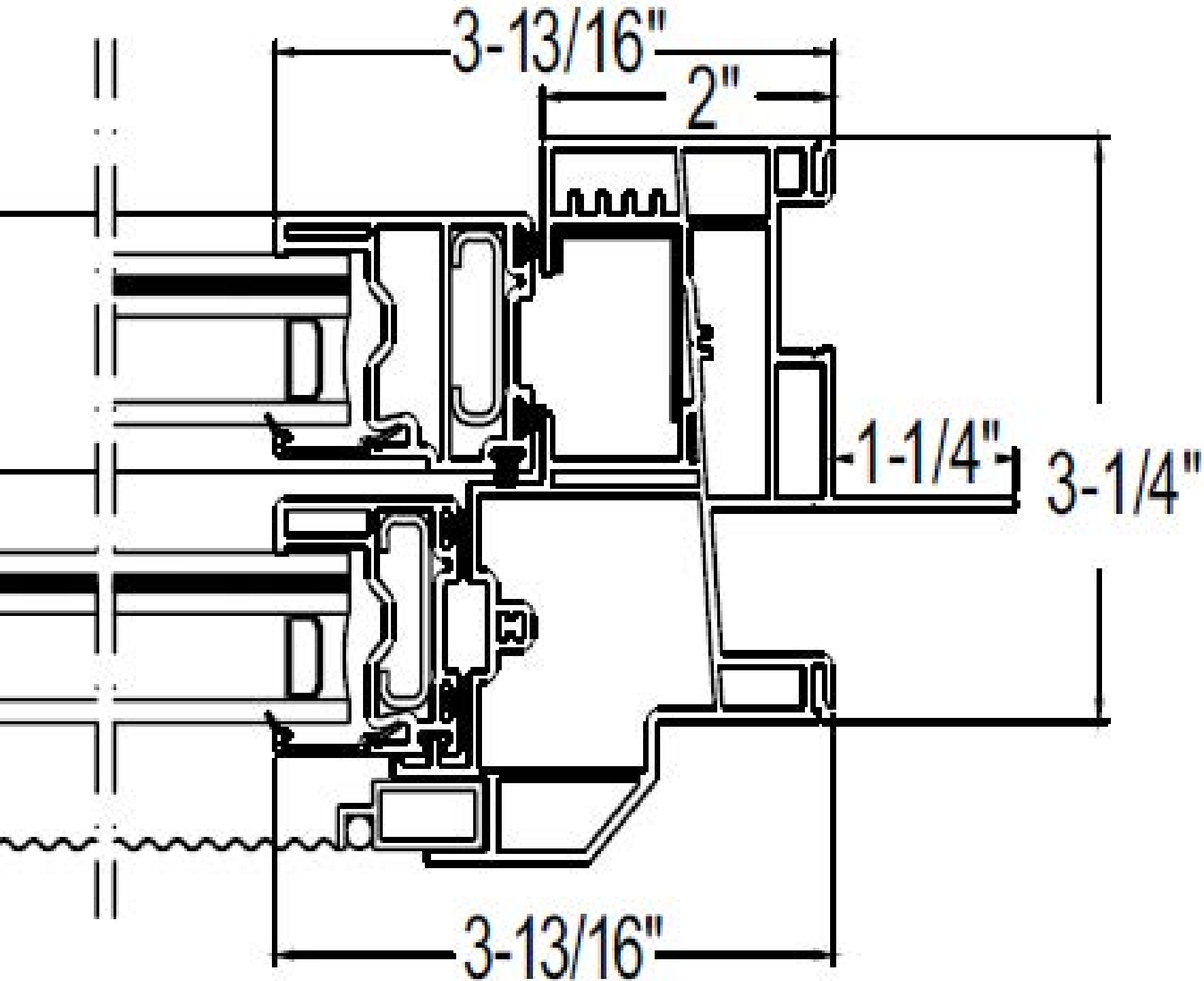
3-13/16"
2"
1-1/4"
3-1/4"
3-13/16"

CoolTrol® Energy Control Products

National Resource Management, Inc.

CCS2 Cooler Energy Control System - Spec Sheet

Description

The CCS2 is a microprocessor based digital controller that is designed and programmed to operate a walk-in cooler in an energy efficient manner. The controller features a graphic display and a keypad, which allows operating parameters to be viewed and changed.
The control box has a run/bypass button and optional switch. When the controller is in bypass mode, all relays are de-energized. The relays go to their NC positions and the original control circuit is reestablished. The cooler is now operating on the original thermostat.

CCS2 Controller

Features

- Shutdown Button – timed shutdown while loading cooler.
- Optional Outside Air Economizer.
- Night Setback of coolers with non-perishable product.
- Alarms – high/low temperature, system bypassed, probe failure.
- Defrosts based on load, and terminated on temperature.
- Data Logging – up to 10 years of data.
- Two 4-20mA inputs for logging data from Current/Pressure Transducers.
- Two low voltage PWM outputs for controlling ECM motors.
- Remote Monitoring/Control with Remote Site Manager System.

Specifications

Power supply	24 VAC 20VA	Temperature sensors	5kΩ thermistor, Z curve
Onboard Relays	1A at 24 V AC/DC	Digital Inputs	Dry contact
Control Relay Rating	250VAC 7.5A	Communication ports	Ethernet, USB
PWM outputs	14 VDC 34mA	Control range:	
		System with Air Defrost	31ºF - 65ºF
Agency approvals	UL Listed 34BA Refrigeration Controller	System with Electric/Hot gas Defrost	-20ºF - 65ºF

Options

_E	Outside air economizer.
_NS	Night Shutoff Control. Single channel, 7 day on/off control.

Typical system connections

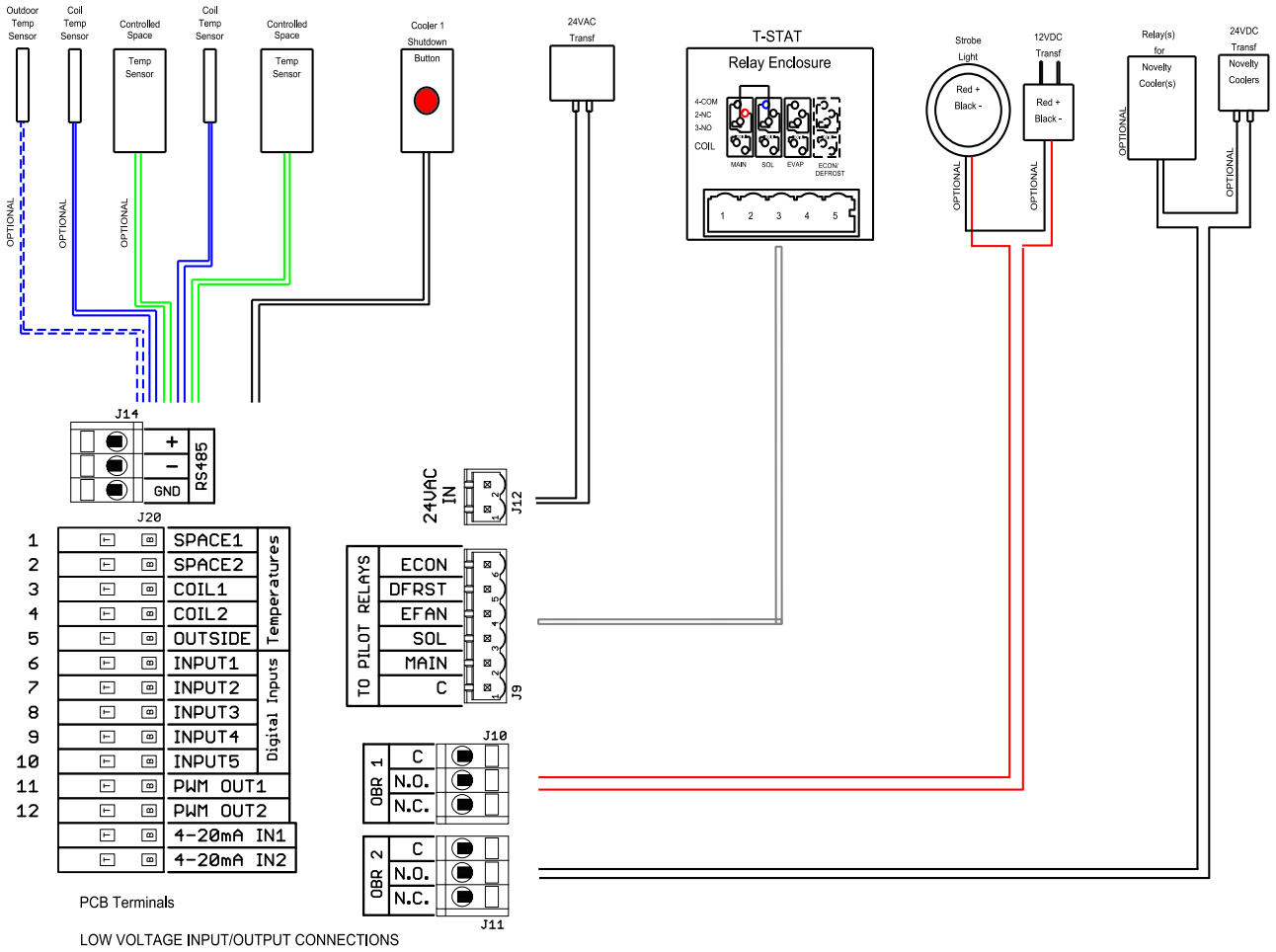

Typical control connections

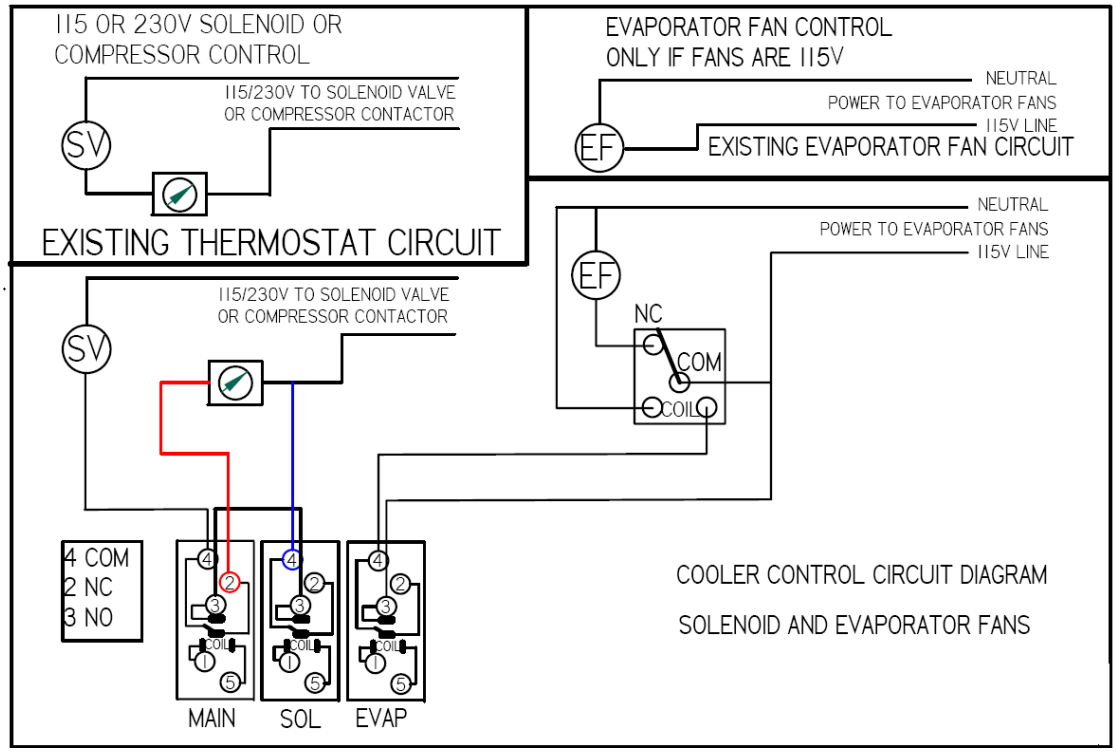

NEXUS® Model - 8 I/O AC Controller

CTR-X12-AC-08 Series

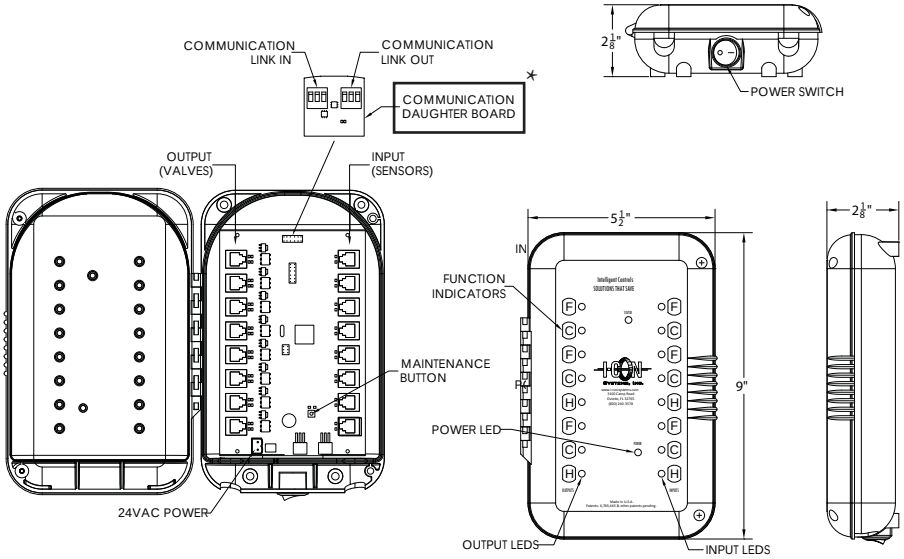

* **Note:** Communication Daughter Board is required for communicating controllers only.

Description

Standalone or Communicating Eight Input/Eight Output Controller used to control up to Eight buttons and valves. Multiple controllers can be networked and linked into an I-CON ENVISAGE® powered computer system.

8 I/O Program Type (choose one)

	Port # 12345678
☐ Two Combies and Two Showers	(HCFHCFSS)
☐ Two Combies and Two Flush	(HCFHCFFF)
☐ Two Combies and Cold, Hot	(HCFHCFCH)
☐ Two Combies and Flush, Hot	(HCFHCFFH)
☐ Eight Showers	(SSSSSSSS)
☐ Eight Waterclosets	(FFFFFFFF)
☐ Four Lavatories	(HCHCHCHC)
☐ Special Order - Please Contact Factory	_____

Specifications

- New Water Resistant Enclosure
- Designed for penal use and other vandal prone areas to conserve potable water consumption
- 24 VAC power with low power consumption
- Electrical telephone plug type connectors for sensor and solenoid
- Ability to be remotely located up to three hundred (300) feet from the associated fixtures
- UL Listed (E308296) and independently tested
- Adjustable program times without dip switches
- Power switch on the exterior of the housing
- Amber power LED illuminates with power
- Green LEDs illuminate at each port to show the port is active
- Red LEDs indicate block times are in effect
- Power surge protection and voltage spike protection
- Nominal Current Draw: 90mA
- Current Draw per active port: 180 mA

Accessories

See Accessories Section of the I-CON catalog or contact our Customer Service Team for details.

This space is for Architect/Engineer approval

The information contained in this document is subject to change without notice.

I-CON Systems, Inc. • 3100 Camp Road, Oviedo, FL 32765 • Toll Free (800) 240-3578 • Fax (407) 365-7944 • www.i-consystems.com

©2012 I-CON Systems, Inc. One or more products contained herein are protected by U.S. Patent with other undergoing the patent process. Printed in the U.S.A. JAN 2012/01

NEXUS® Model - 4 I/O AC Controller

CTR-X12-AC-04 Series

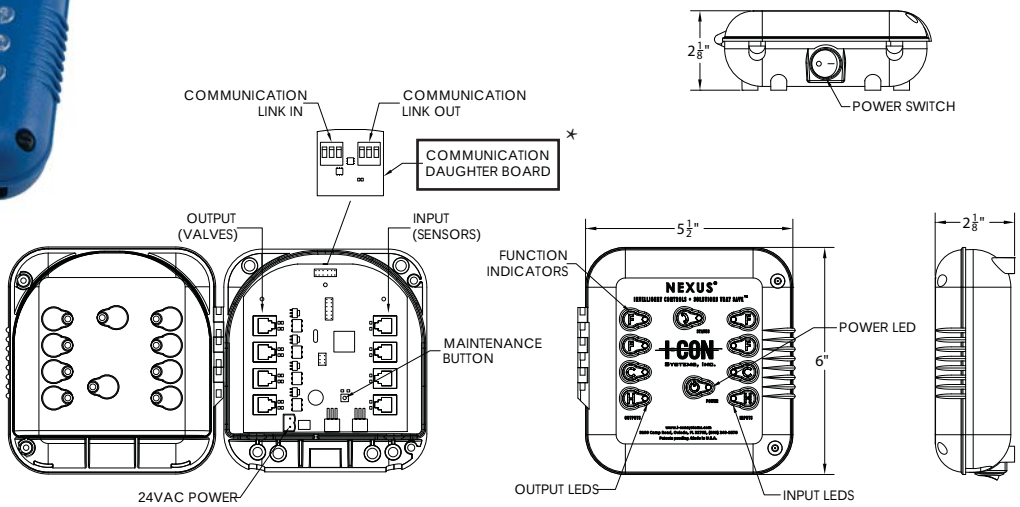

* **Note:** Communication Daughter Board is required for communicating controllers only.

Description

Standalone or Communicating Four Input/Four Output Controller used to control up to Four buttons and valves. Multiple controllers can be networked and linked into an I-CON ENVISAGE® powered computer system.

4 I/O Program Type (choose one)

	Port # 1234
☐ One Combie and One Shower	(HCFS)
☐ One Combie and Flush	(HCFF)
☐ Two Cold and Two Flush	(CCFF)
☐ Four Showers	(SSSS)
☐ Four Waterclosets	(FFFF)
☐ Two Lavatories	(HCHC)
☐ Special Order - Please Contact Factory	_____

Specifications

- New Water Resistant Enclosure
- Designed for penal use and other vandal prone areas to conserve potable water consumption
- 24 VAC power with low power consumption
- Electrical telephone plug type connectors for sensor and solenoid
- Ability to be remotely located up to three hundred (300) feet from the associated fixtures
- UL Listed (E308296) and independently tested
- Adjustable program times without dip switches
- Power switch on the exterior of the housing
- Amber power LED illuminates with power
- Green LEDs illuminate at each port to show the port is active
- Red LEDs indicate block times are in effect
- Power surge protection and voltage spike protection
- Nominal Current Draw: 90mA
- Current Draw per active port: 180 mA

Accessories

See Accessories Section of the I-CON catalog or contact our Customer Service Team for details.

This space is for Architect/Engineer approval

The information contained in this document is subject to change without notice.

I-CON Systems, Inc. • 3100 Camp Road, Oviedo, FL 32765 • Toll Free (800) 240-3578 • Fax (407) 365-7944 • www.i-consystems.com

©2012 I-CON Systems, Inc. One or more products contained herein are protected by U.S. Patent with other undergoing the patent process. Printed in the U.S.A. JAN 2012/01

NEXUS® Model 4 I/O DC Battery Powered Controller

CTR-X11.5-B-04 Series

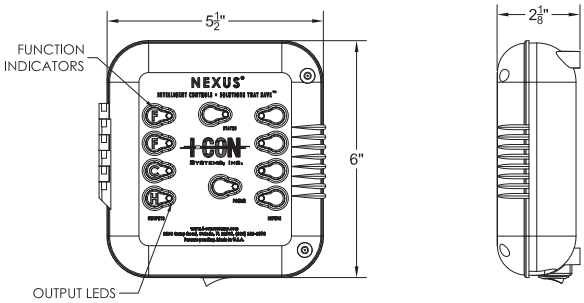

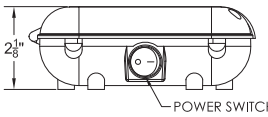

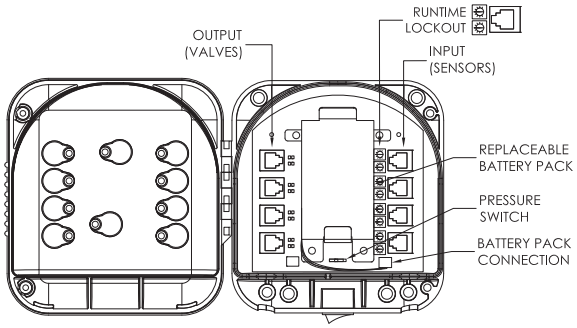

► **Description**

9VDC standalone Four Input/Four Output Electronic Controller used to control up to four sensors and valves. Dedicated potentiometers allow for field adjustable lockouts and runtimes.

► **Program Type** (choose one)

	Port # 1234
☐ One Combie and One Shower	(HCFS)
☐ One Combie and Flush	(HCFF)
☐ Four Watercloset	(FFFF)
☐ Four Showers	(SSSS)
☐ Two Lavatories	(HCHC)
☐ Special Order - Please Contact Factory	_____

► **Timing Adjustment Option** (choose one)

☐ Standard - Field Adjustable Lockouts & Runtimes
☐ Custom - Please Contact Factory

► **Accessories**

See Accessories Section of the I-CON catalog or contact our Customer Service Team for details.

Specifications

- Water Resistant Enclosure
- Specifically designed for penal use and other vandal prone areas to conserve potable water consumption
- Electrical telephone plug type connectors for sensor and solenoid
- UL Listed (E308296) and independently tested
- Power switch on the exterior of the housing
- Green LEDs illuminate at each port to show the port is active
- Red LEDs indicate block times are in effect
- 10+ years typical battery life at 35,000 uses per year* (1 use every 10 min, 16 hours a day, 7 days a week)

*actual battery life depends on usage, operating conditions and storage conditions.

This space is for Architect/Engineer approval

The information contained in this document is subject to change without notice.

I-CON Systems, Inc. • 3100 Camp Road, Oviedo, FL 32765 • Toll Free (800) 240-3578 • Fax (407) 365-7944 • www.i-consystems.com

©2016 I-CON Systems, Inc. One or more products contained herein are protected by U.S. Patent with other undergoing the patent process. Printed in the U.S.A. DEC 2016/12

NEXUS® Model CTR-X11.5-B-01 Series
1 I/O DC Battery Powered Controller

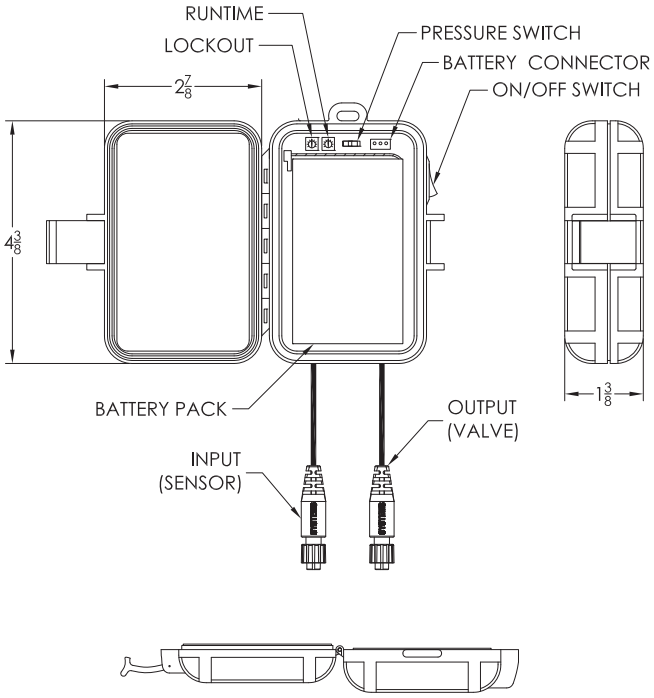

► **Description**

9VDC standalone electronic controller used to control a single shower, watercloset, or lavatory valve. Potentiometers allow for field adjustable lockout and runtime.

► **Program Type** (choose one) Port # 1

- ☐ One Cold (C)
- ☐ One Flush (F)
- ☐ One Hot (H)
- ☐ One Shower (S)
- ☐ Special Order - Please Contact Factory _____

► **Timing Adjustment Option** (choose one)

- ☐ Standard - Field Adjustable Lockout & Runtime
- ☐ Custom - Please Contact Factory

Specifications

- Water Resistant Enclosure
- Specifically designed for penal use and other vandal prone areas to conserve potable water consumption
- 2ft watertight leads for solenoid and sensor connection
- UL Listed (E308296) and independently tested
- Power switch on the exterior of the housing
- Standard or high pressure option switch
- 15+ years typical battery life at 17,500 uses per year* (1 use every 20 min, 16 hours a day, 7 days a week)

*actual battery life depends on usage, operating conditions and storage conditions.

► **Accessories**

See Accessories Section of the I-CON catalog or contact our Customer Service Team for details.

This space is for Architect/Engineer approval

The information contained in this document is subject to change without notice.

I-CON Systems, Inc. • 3100 Camp Road, Oviedo, FL 32765 • Toll Free (800) 240-3578 • Fax (407) 365-7944 • www.i-consystems.com

©2016 I-CON Systems, Inc. One or more products contained herein are protected by U.S. Patent with other undergoing the patent process. Printed in the U.S.A. DEC 2016/12

NEXUS® Model 1 I/O AC Standalone Controller

CTR-X11.3-S-01 Series

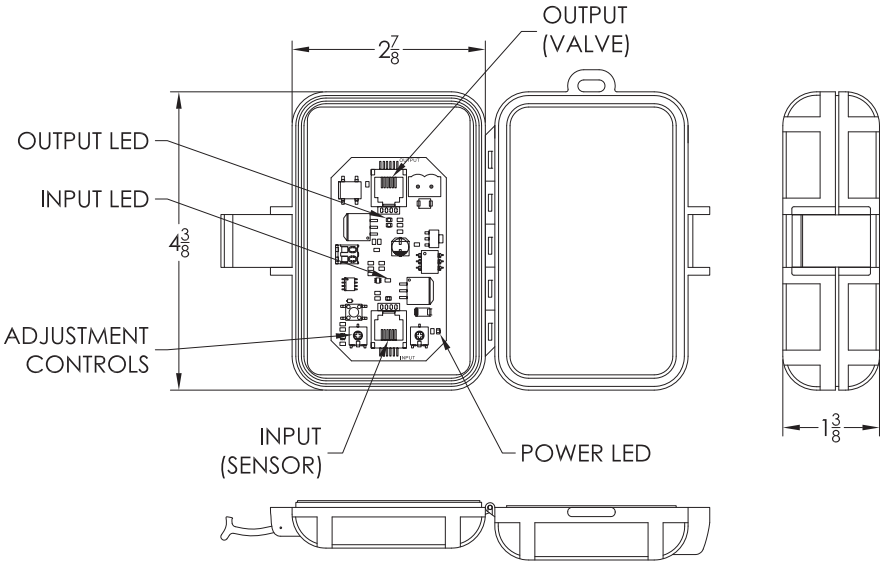

► **Description**

24VAC standalone electronic controller used to control a single pre-tempered shower, watercloset, or lavatory valve.

► **Program Type** (choose one) Port # 1

- ☐ One Cold (C)
- ☐ One Flush (F)
- ☐ One Hot (H)
- ☐ One Shower (S)
- ☐ Special Order - Please Contact Factory _____

► **Timing Adjustment Option** (choose one)

- ☐ Standard
- ☐ Custom Lockout Times (Waterclosets)
- ☐ Custom Run Times (Showers)
- ☐ Custom Lockout Times and Runtimes (WC & Shower)

► **Accessories**

See Accessories Section of the I-CON catalog or contact our Customer Service Team for details.

Specifications

- Specifically designed for penal use and other vandal prone areas to conserve potable water consumption
- 24 VAC power with low power consumption
- Electrical telephone plug type connectors for sensor and solenoid
- Ability to be remotely located up to three hundred (300) feet from the associated fixtures
- UL Listed (E308296) and independently tested
- Adjustable program times without dip switches
- Amber power LED illuminates with power
- Green LEDs illuminate at each port to show the port is active
- Red LEDs indicate block times are in effect
- Power surge protection and voltage spike protection

This space is for Architect/Engineer approval

The information contained in this document is subject to change without notice.

I-CON Systems, Inc. • 3100 Camp Road, Oviedo, FL 32765 • Toll Free (800) 240-3578 • Fax (407) 365-7944 • www.i-consystems.com

©2014 I-CON Systems, Inc. One or more products contained herein are protected by U.S. Patent with other undergoing the patent process. Printed in the U.S.A. OCT 2014/10

TruTOUCH® Model
Force Activated Touch Sensor

SEN-1501 Series

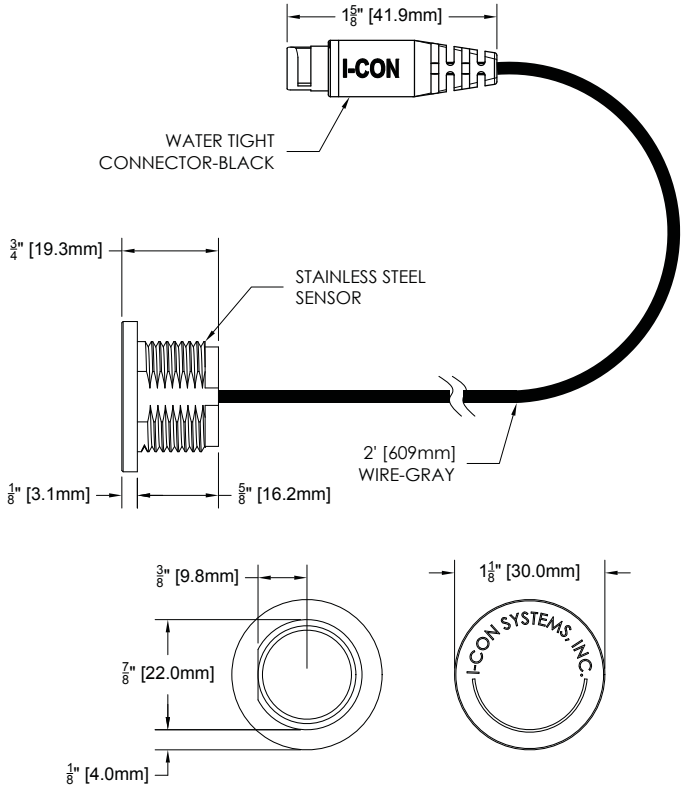

► **Description**

Fully Electronic Force Activated Sensor with no moving parts. Sensor includes a two foot lead with watertight connector. Lead cable with RJ connector is **required for operation and sold separately.** Choose from a variety of lengths below.

► **Lead Cable Length** (must choose one)

- ☐ 6' Lead Cable w/RJ Connector - WR-SEN-WT-4C-006
- ☐ 15' Lead Cable w/RJ Connector - WR-SEN-WT-4C-015
- ☐ 25' Lead Cable w/RJ Connector - WR-SEN-WT-4C-025
- ☐ 35' Lead Cable w/RJ Connector - WR-SEN-WT-4C-035
- ☐ 60' Lead Cable w/RJ Connector - WR-SEN-WT-4C-060

► **Accessories**

See Accessories Section of the I-CON catalog or contact our Customer Service Team for details.

Specifications

- Specifically designed for penal use
- Rugged, polished stainless steel housing with no internal moving parts makes the unit virtually vandal-proof
- Proven reliability with testing of over 1 million activations
- Unique design allows activation by finger pressure without compromising its sealing integrity
- Proprietary 5V DC design allowing for no power consumption until touched by operator.
- Ability to be remotely located up to three hundred (300) feet from the associated controller
- Telephone type connectors for quick and easy connection to controller
- Meets all ADA requirements
- IP 68 Protection
- Operating temperature range from -40F to 257F

This space is for Architect/Engineer approval

The information contained in this document is subject to change without notice.

I-CON Systems, Inc. • 3100 Camp Road, Oviedo, FL 32765 • Toll Free (800) 240-3578 • Fax (407) 365-7944 • www.i-consystems.com

©2012 I-CON Systems, Inc. One or more products contained herein are protected by U.S. Patent with other undergoing the patent process. Printed in the U.S.A. JAN 2012/01

MOMENTUM® Model Electronic Retrofit Flush Valve

VLV-FVL-3801 Series

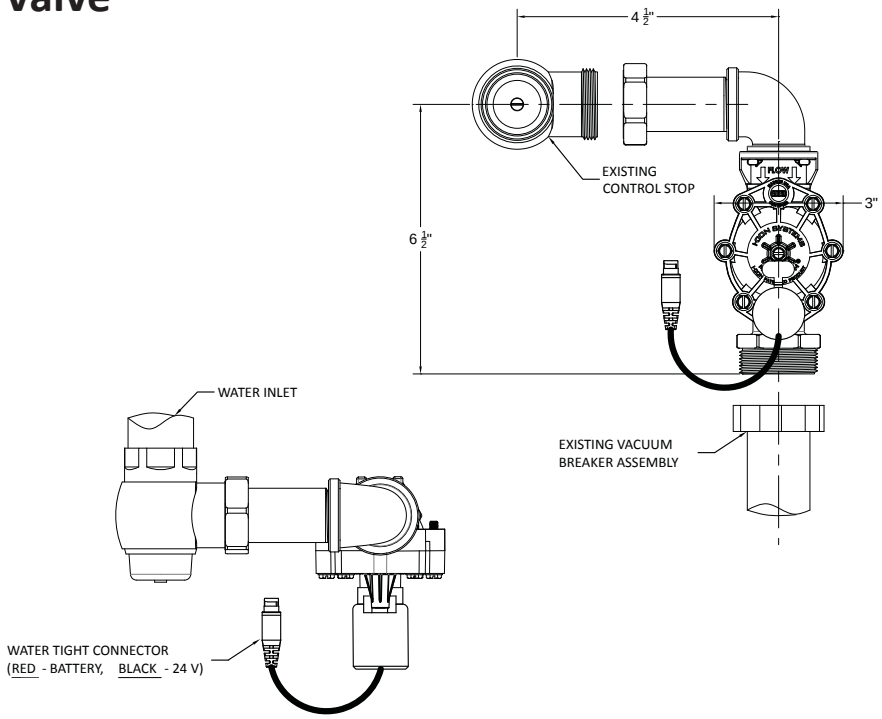

► **Description**

Concealed Water Closet and Urinal Flush Valve used in retrofit applications to reduce consumption and abuse.

► **High Velocity Flow Rates**

- 1.6 gpf on 3.5 gallon WC fixture - Low Consumption (LC)
- .9 gpf on 1.6 gallon WC fixture - Ultra High Efficient (UHE)
- .5 gpf on 1.0 gallon Urinal fixture - Low Consumption (LC)
- .125 gpf (1 pint) on Urinal fixture - Ultra High Efficient (UHE)

► **Solenoid Power** (choose one)

☐ 24 Volts AC
☐ 9 Volts DC (Battery Operated)

► **Accessories**

For additional accessories, see the Accessories Section of the I-CON catalog or contact our Customer Service Team for details.

Specifications

- Third Party Tested and approved for flushing 1.6 gallons on a 3.5 gallon fixture and .9 gallons on a 1.6 gallon fixture
- No metering diaphragms to fail and clog
- Engineered non-metallic valve body made from high strength glass filled polymer for advanced corrosion resistance
- Ability to flush using manual by-pass handle
- Straight through flow path to maximum flush velocity and provide superior force of flush
- All solenoids are interchangeable with other I-CON valves reducing spare parts
- Positive valve shut-off after pressure loss eliminating continual flush of typical flushometers
- Easily retrofits to existing inlet and outlet water piping hardware
- Flush activation adjustment to overcome calcium build-up blocking older flush jets

This space is for Architect/Engineer approval

The information contained in this document is subject to change without notice.

I-CON Systems, Inc. • 3100 Camp Road, Oviedo, FL 32765 • Toll Free (800) 240-3578 • Fax (407) 365-7944 • www.i-con.com

©2013 I-CON Systems, Inc. One or more products contained herein are protected by U.S. Patent with other undergoing the patent process. Printed in the U.S.A. JUN 2017/23

ELEMENT® Hot and Cold Model Electronic Manifold Lavatory Valve

VLV-LAV-4830 Series

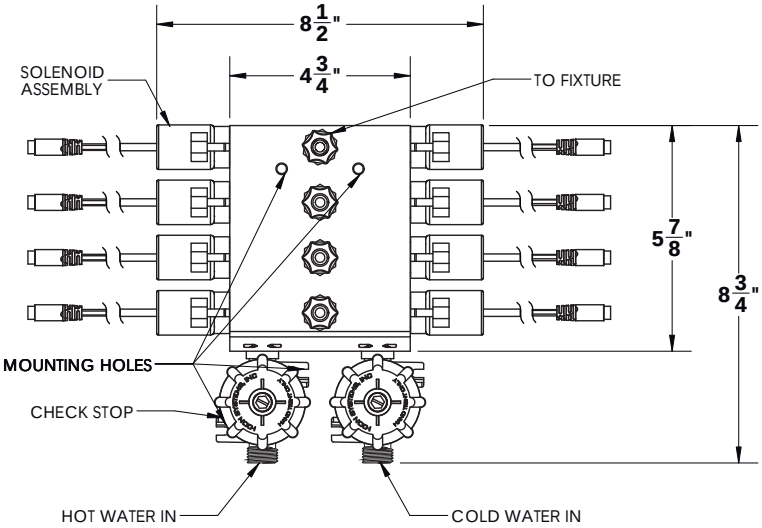

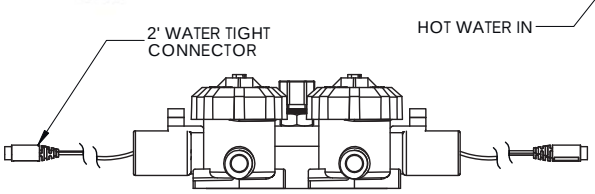

► **Description**

Lavatory manifold valve for use with hot and cold water. Up to four lavatories can be supplied by one unit. Includes new pressure compensating 0.5 GPM flow regulators as standard.

► **Number of hot and cold lavatories** (choose one)

- ☐ One lavatory
- ☐ Two lavatories
- ☐ Four lavatories

► **Solenoid Power** (choose one)

- ☐ 24 Volts AC
- ☐ 9 Volts DC (Battery Operated)

► **Accessories**

For additional accessories, see the Accessories Section of the I-CON catalog or contact our Customer Service Team for details.

Specifications

- New pressure compensating 0.5 GPM flow regulators as standard
- New check stop retaining clips for added support and reliability
- Expandable valve solution allowing for one (1) hot and cold water supply for up to four (4) lavatories
- No metering diaphragms to fail and clog
- Engineered non-metallic polymer valve body for advanced corrosion resistance
- Ability to activate using manual by-pass handle
- All solenoids are interchangeable with other I-CON valves reducing spare parts
- Positive valve shut-off after pressure loss eliminating continual running of valve
- Maximum water temperature of 120 degrees F and maximum pressure of 100 PSI
- 1/2" NPT supply connections and 3/8" OD tubing outlet

This space is for Architect/Engineer approval

The information contained in this document is subject to change without notice.

I-CON Systems, Inc. • 3100 Camp Road, Oviedo, FL 32765 • Toll Free (800) 240-3578 • Fax (407) 365-7944 • www.i-consystems.com

©2012 I-CON Systems, Inc. One or more products contained herein are protected by U.S. Patent with other undergoing the patent process. Printed in the U.S.A. JUN 2015/06

ZEPHYR® Model Pneumatic Retrofit Block

VLV-CMN-219X Series

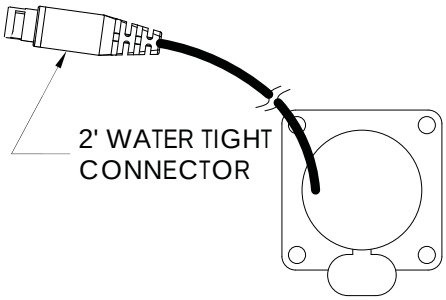

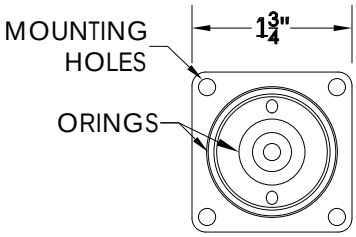

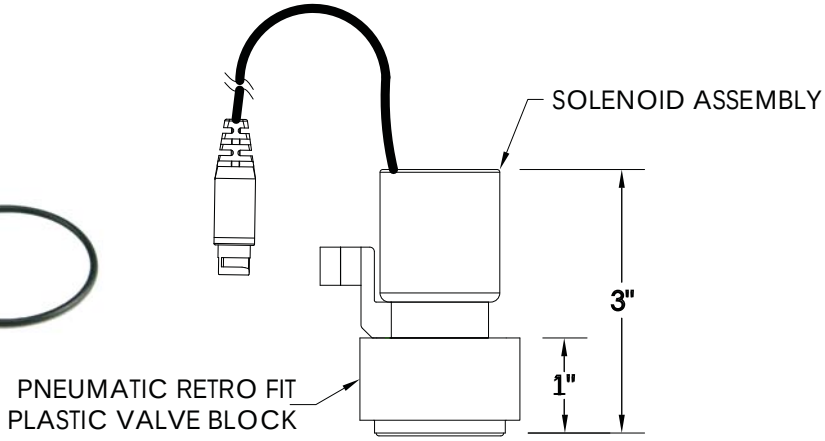

► **Description**

Pneumatic Retrofit Block easily converts existing pneumatic valves to low voltage, electronically controlled systems. The VLV-CMN-2190 replaces Acorn, Metcraft, and Willoughby pneumatic servomotors while the VLV-CMN-2191 replaces older style Bradley pneumatic servomotors.

► **Available Options** (choose one)

- ☐ 1-3/4" Block w/ 24VAC TruFIRE™ Solenoid
- ☐ 1-3/4" Block w/ 9VDC TruFIRE™ Solenoid
- ☐ 2" Block w/ 24VAC TruFIRE™ Solenoid
- ☐ 2" Block w/ 9VDC TruFIRE™ Solenoid

► **Solenoid Power** (choose one)

- ☐ 24 Volts AC
- ☐ 9 Volts DC (Battery Operated)

Specifications

- Expandable valve solution allowing for one (1) pre-temperd water supply for up to three (3) shower valves
- No metering diaphragms to fail and clog
- Engineered non-metallic valve body made from Delrin for advanced corrosion resistance
- Ability to activate using manual by-pass handle
- Advanced design allows for 1.5 GPM shower saving water over 2 GPM shower units
- All solenoid are interchangeable with other I-CON valves reducing spare parts
- Maximum water temperature of 120 degrees F and maximum pressure of 100 PSI

► **Accessories**

See Accessories Section of the I-CON catalog or contact our Customer Service Team for details.

This space is for Architect/Engineer approval

The information contained in this document is subject to change without notice.

I-CON Systems, Inc. • 3100 Camp Road, Oviedo, FL 32765 • Toll Free (800) 240-3578 • Fax (407) 365-7944 • www.i-consystems.com

©2012 I-CON Systems, Inc. One or more products contained herein are protected by U.S. Patent with other undergoing the patent process. Printed in the U.S.A. JAN 2012/01

WATER CONSERVATION PRODUCTS
CORRECTIONAL APPLICATIONS

Electronic In-Line Shower Valve

VLV-SHW-5775 Series

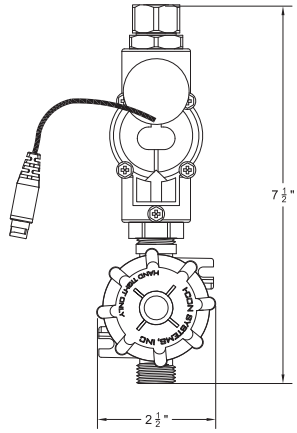

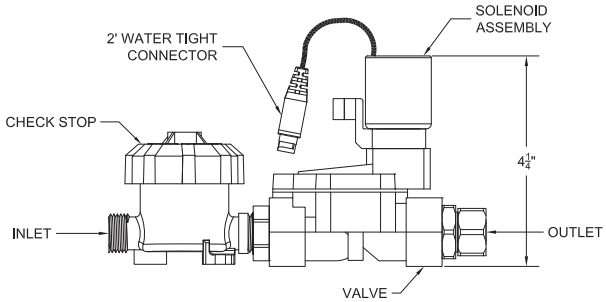

► **Description**
In-line shower valve for use with pre-tempered water.

► **Inlet Fitting** (choose one)
- ☐ 1/2" IPS - Requires Check Stop Strainer
- ☐ Special Order - Please Contact Factory _____

Note: NPT to Compression Available and Sold Separately

► **Outlet Fitting** (choose one)
- ☐ 3/8" Compression
- ☐ 1/2" Compression
- ☐ 5/8" Compression
- ☐ Special Order - Please Contact Factory _____

► **Strainer** (choose one)
- ☐ 1/2" Check Stop Strainer
- ☐ None

► **Solenoid Power** (choose one)
- ☐ 24 Volts AC
- ☐ 9 Volts DC (Battery Operated)

► **Accessories**

For additional accessories, see the Accessories Section of the I-CON catalog or contact our Customer Service Team for details.

Specifications

- In-line shower valve solution for one (1) pre-temperd shower fixture
- No metering diaphragms to fail and clog
- Engineered non-metallic valve body made from DuPont Zytel for advanced corrosion resistance
- Ability to activate using manual by-pass handle
- Advanced design allows for shower valve to be located 50 feet from fixture
- All solenoids are interchangeable with other I-CON valves reducing spare parts
- Positive valve shut-off after pressure loss eliminating continual running
- Maximum water temperature of 120 degrees F and maximum pressure of 100 PSI
- Optional in-line strainer/screen filter to help remove debris prior to shower head

This space is for Architect/Engineer approval

The information contained in this document is subject to change without notice.

I-CON Systems, Inc. • 3100 Camp Road, Oviedo, FL 32765 • Toll Free (800) 240-3578 • Fax (407) 365-7944 • www.i-con.com

©2012 I-CON Systems, Inc. One or more products contained herein are protected by U.S. Patent with other undergoing the patent process. Printed in the U.S.A. MAR 2018/14

Pre-Tempered Model Electronic Manifold Shower Valve

VLV-SHW-561X Series

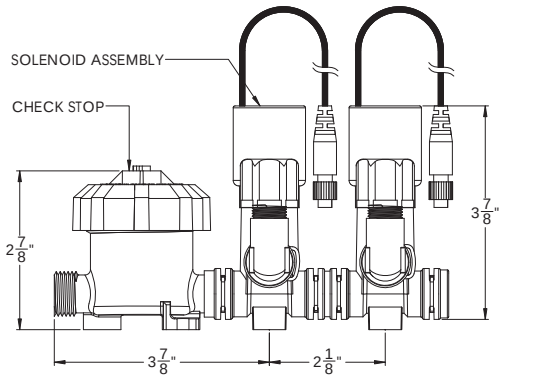

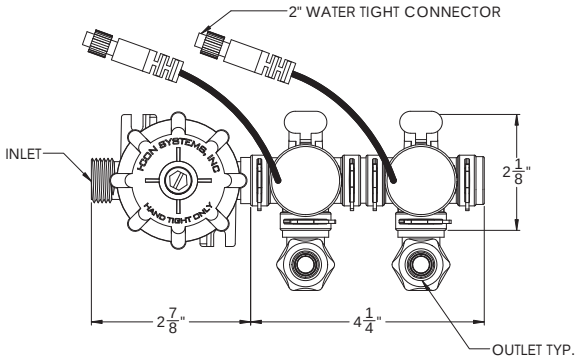

► **Description**
Shower manifold valve for use with pre-tempered water. Up to three pre-tempered showers can be supplied by one unit.

► **Number of pre-tempered showers** (choose one)
- ☐ One shower
- ☐ Two showers
- ☐ Three showers

► **Solenoid Power** (choose one)
- ☐ 24 Volts AC (High Flow)

► **Accessories**

For additional accessories, see the Accessories Section of the I-CON catalog or contact our Customer Service Team for details.

Specifications

- Expandable valve solution allowing for one (1) pre-temperd water supply for up to three (3) shower valves
- No metering diaphragms to fail and clog
- Engineered non-metallic valve body made from high strength glass filled polymer for advanced corrosion resistance
- Ability to activate using manual by-pass handle
- Advanced design allows for 1.5 GPM shower saving water over 2 GPM shower units
- All solenoid are interchangeable with other I-CON valves reducing spare parts
- Positive valve shut-off after pressure loss eliminating continual running
- Maximum water temperature of 120 degrees F and maximum pressure of 100 PSI
- 1/2” IPS compatible with 1/2” NPT

This space is for Architect/Engineer approval

The information contained in this document is subject to change without notice.

I-CON Systems, Inc. • 3100 Camp Road, Oviedo, FL 32765 • Toll Free (800) 240-3578 • Fax (407) 365-7944 • www.i-consystems.com

©2012 I-CON Systems, Inc. One or more products contained herein are protected by U.S. Patent with other undergoing the patent process. Printed in the U.S.A. MAR 2017/14

17.5° Chrome Shower Head

FXR-SHW-2225

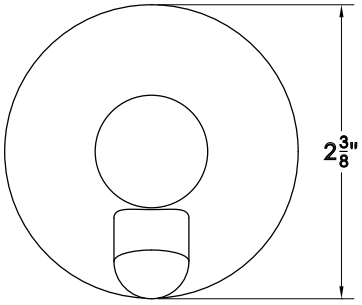

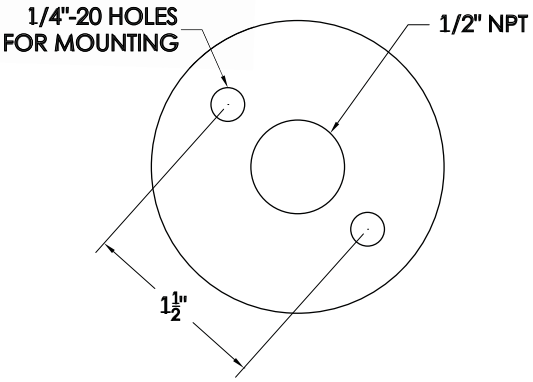

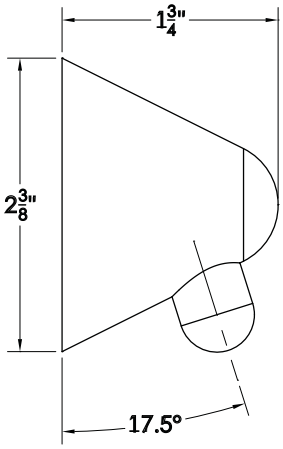

Description

I-CON's 17.5° Chrome Shower Head, provides long lasting durability against abuse and supports a range of spray patterns, with a 5° minimum and a 70° maximum. The spray pattern is field adjustable using a 1/8" Allen Wrench.

Specifications

- Solid Brass Construction
- 1/2" NPT Threaded Female Inlet

Accessories

See Accessories Section of the I-CON catalog or contact our Customer Service Team for details.

This space is for Architect/Engineer approval

The information contained in this document is subject to change without notice.

I-CON Systems, Inc. • 3100 Camp Road, Oviedo, FL 32765 • Toll Free (800) 240-3578 • Fax (407) 365-7944 • www.i-consystems.com

©2012 I-CON Systems, Inc. One or more products contained herein are protected by U.S. Patent with other undergoing the patent process. Printed in the U.S.A. JAN 2012/01

Pilfer Proof Shower Head

FXR-SHW-2226

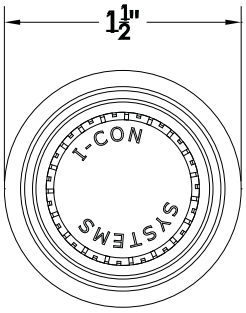

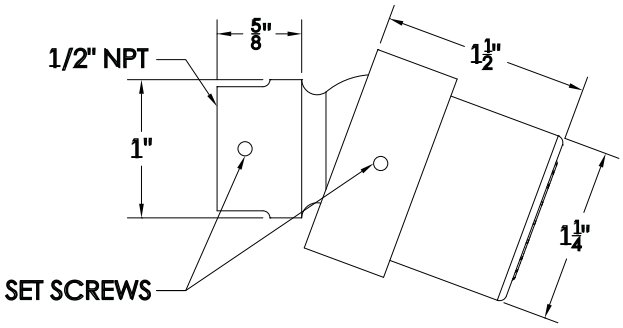

► **Description**
I-CON's solid brass, chrome plated, pilfer proof shower head, provides long lasting durability against abuse. This shower head features a ball joint head and a fixed width spray pattern.

► **Flow Restrictors** (included)
- 2.0 gpm - white
- 1.5 gpm - blue

Specifications
- Solid Brass Construction
- 1/2" NPT Threaded Female Inlet
- 15 to 80 PSI

► **Accessories**
See Accessories Section of the I-CON catalog or contact our Customer Service Team for details.

This space is for Architect/Engineer approval

The information contained in this document is subject to change without notice.

I-CON Systems, Inc. • 3100 Camp Road, Oviedo, FL 32765 • Toll Free (800) 240-3578 • Fax (407) 365-7944 • www.i-con.com

©2012 I-CON Systems, Inc. One or more products contained herein are protected by U.S. Patent with other undergoing the patent process. Printed in the U.S.A. JUN 2017/23

HighSierra SHOWERHEADS™

Conserving water at the source.

FITTING NO.
FCS-100-VRM1214
SUBMITTED MODEL NO.

JOB NAME	ITEM NO.

SUBMITTED AS SHOWN	
SUBMITTED AS NOTED	
SEE ATTACHED FOR SUBMITTED MODIFICATION	

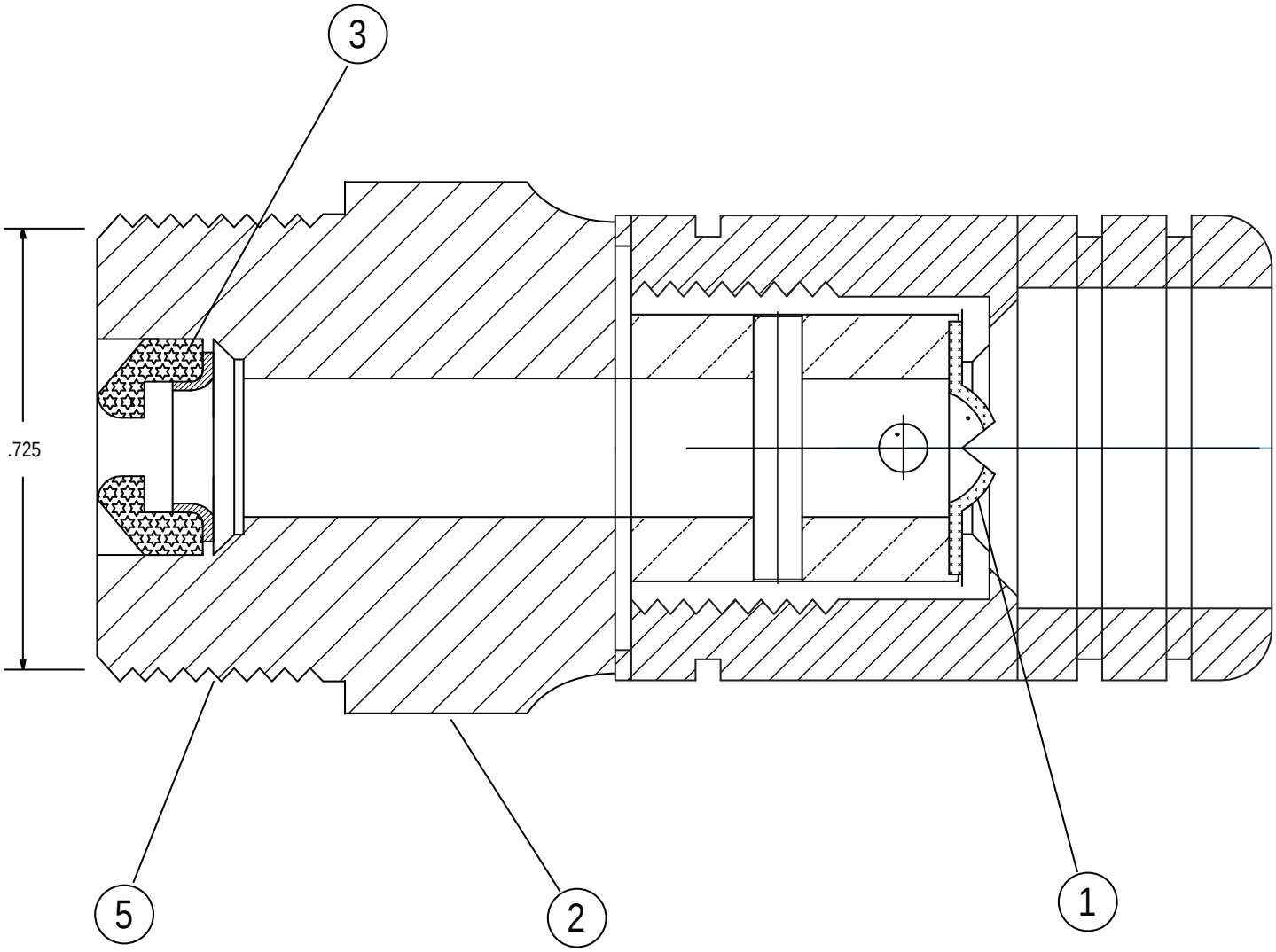

DIMENSIONS IN INCHES

TECHNICAL DATA	SPECIFICATION MANUAL

1. FCS™ Patented Nozzle
2. 7/8" Hex Rounded Corners
3. 1.5 gpm Accu-Flo™ Pressure Regulator
4. 1.5gpm @ 30 - 80psi
5. Threads: 1/2" NPT

Plug-In Model 28 Volt Transformer

TRS-PI-120V-1.5A

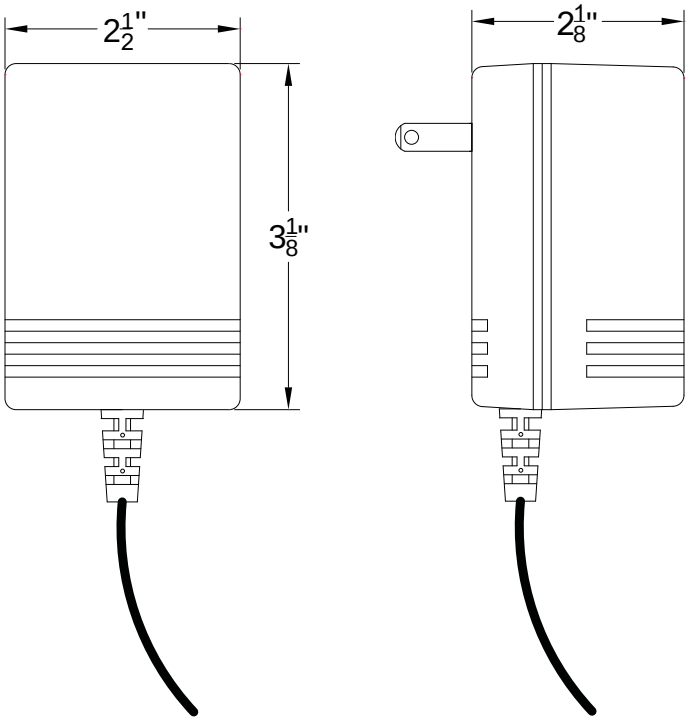

► **Description**

The Plug-In Transformer is designed to be plugged into a standard two-pronged receptacle.

► **Amperage**

1.50 Amp (1500mA) for use with all controllers.

Specifications

- Converts 120VAC, 60 Hz to 28 VAC, 60 Hz Unit
- Unit is Class 2, internally fused
- UL listed, UL file number: E82323
- Operating temperature range from -40F to 230F

► **Accessories**

See Accessories Section of the I-CON catalog or contact our Customer Service Team for details.

This space is for Architect/Engineer approval

The information contained in this document is subject to change without notice.

I-CON Systems, Inc. • 3100 Camp Road, Oviedo, FL 32765 • Toll Free (800) 240-3578 • Fax (407) 365-7944 • www.i-con.com

©2017 I-CON Systems, Inc. One or more products contained herein are protected by U.S. Patent with other undergoing the patent process. Printed in the U.S.A. FEB 2017/02

Buck & Boost Transformer

TRS-BB Series

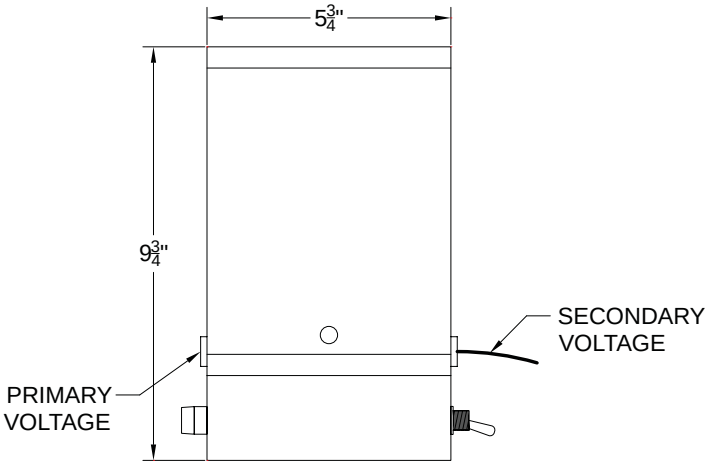

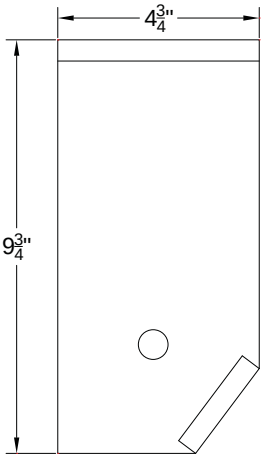

Description

The TRS-BB series of transformer assemblies are designed to provide power to multiple I-CON electronic plumbing controllers. The number of controllers the transformer can power varies by controller size and configuration.

Primary Voltage & Rating Options (choose one)

	Primary Voltage	Capacity	Max Primary Current	Max Secondary Current	Part Number
☐	120VAC	0.5kVA	4.2A	17.9A	TRS-BB-120/240V-0.50KVA-28
☐	120VAC	1.0kVA	8.4A	35.7A	TRS-BB-120/240V-1.00KVA-28
☐	240VAC	0.5kVA	2.1A	17.9A	TRS-BB-120/240V-0.50KVA-28
☐	240VAC	1.0kVA	4.2A	35.7A	TRS-BB-120/240V-1.00KVA-28
☐	277VAC	0.5kVA	2.1A	20.8A	TRS-BB-277V-0.50KVA-28
☐	277VAC	1.0kVA	4.2A	41.7A	TRS-BB-277V-1.00KVA-28
☐	208VAC	0.5kVA	2.1A	15.6A	TRS-BB-208V-0.50KVA-28
☐	208VAC	1.0kVA	4.2A	31.A	TRS-BB-208V-1.00KVA-28

Specifications

- Primary Voltage 120 / 240 / 277 / 208VAC, 60Hz
- KVA Ratings .50, 1.00
- Secondary Voltage 28VAC
- Box Dimensions 10” H x 6” W x 5” D

Transformer Selection & Installation Considerations

- Choose the appropriate capacity. Budget roughly 0.15A for each controller and 0.17A for each simultaneously operated solenoid.
- Choose appropriate heavy gauge wire for secondary side distribution, considering voltage drop along the wire as well as current carrying capacity.
- The number of controllers that can be powered from a single transformer is often limited by the voltage drop along the wire. In most operating conditions, there must be at least 22VAC available at the controller for reliable solenoid operation.
- Locate the transformer as close as practical to the controllers minimizing the length of the 28VAC distribution wires.
- Consult with an I-CON representative for assistance in choosing the best transformer solution for your needs.

Accessories

For additional accessories, see the Accessories Section of the I-CON catalog or contact our Customer Service Team for details.

This space is for Architect/Engineer approval

The information contained in this document is subject to change without notice.

I-CON Systems, Inc. • 3100 Camp Road, Oviedo, FL 32765 • Toll Free (800) 240-3578 • Fax (407) 365-7944 • www.i-con.com

©2017 I-CON Systems, Inc. One or more products contained herein are protected by U.S. Patent with other undergoing the patent process. Printed in the U.S.A. NOV 2017/11

Box Mount Model 24 Volt Transformer

EC-TRS-BM-120V Series

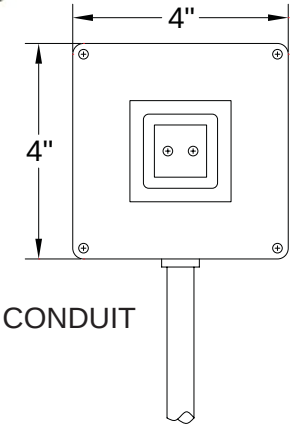

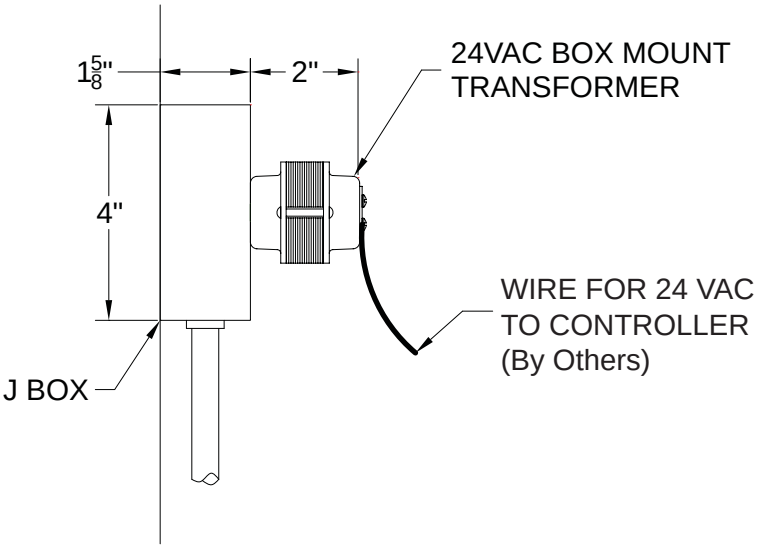

► **Description**

The Box Mount Transformer is designed to be hardwired and mounted in a standard 4” x 4” electrical junction Box

► **Amperage**

1.00 Amp (40 VA) for use with two (2) 4 I/O controllers or one (1) 8 I/O controller

Specifications

- Converts 120VAC, 60 Hz to 24 VAC, 60 Hz
- Unit is Class 2, internally fused
- Mounts in any 1/2” knock out located on the side of a typical electrical box
- UL listed, UL file number: E32963
- Operating temperature range from -40F to 230F

► **Accessories**

For additional accessories, see the Accessories Section of the I-CON catalog or contact our Customer Service Team for details.

This space is for Architect/Engineer approval

The information contained in this document is subject to change without notice.

I-CON Systems, Inc. • 3100 Camp Road, Oviedo, FL 32765 • Toll Free (800) 240-3578 • Fax (407) 365-7944 • www.i-consystems.com

©2012 I-CON Systems, Inc. One or more products contained herein are protected by U.S. Patent with other undergoing the patent process. Printed in the U.S.A. JAN 2012/01

MOMENTUM® Flush Valve Rebuild Kit

EUC-RKT-3801

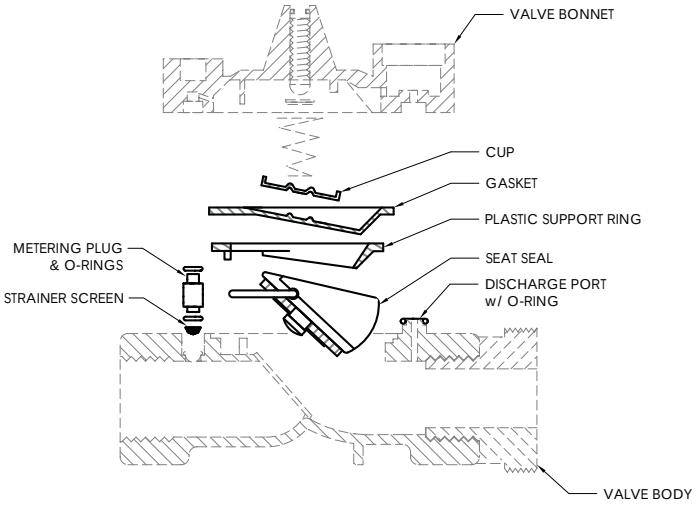

EXPLODED SIDE VIEW

Description

A complete internal rebuild kit for the 1" MOMENTUM® Flush Valve. This kit will rebuild all I-CON series 3700 and 3800 model MOMENTUM® Flush Valves. Kit includes the valve's seat seal, a 3801 model flush valve support ring *(marked with "38" on the left & "SR" on the right side of a rib found on the arc of the ring)*, a 3711 model flush valve support ring, pressure separation gasket, metering plug and o-rings, strainer screen, discharge port o-ring and stand cup allowing for the rebuilt valve to meet the standards of a new MOMENTUM® Flush Valve.

Specifications

- (1) one Cup
- (1) one Gasket
- (1) one 3801 Model Plastic Support Ring
  Marked with "38" & "SR" on each side of rib on arc.
- (1) one 3711 Model Plastic Support Ring
- (1) one Seat Seal
- (2) two Metering Plug O-Rings
- (1) one Metering Plug
- (1) one Strainer Screen
- (1) one Discharge Port O-Ring

Accessories

See Accessories Section of the I-CON catalog or contact our Customer Service Team for details.

This space is for Architect/Engineer approval

The information contained in this document is subject to change without notice.

I-CON Systems, Inc. • 3100 Camp Road, Oviedo, FL 32765 • Toll Free (800) 240-3578 • Fax (407) 365-7944 • www.i-consystems.com

©2013 I-CON Systems, Inc. One or more products contained herein are protected by U.S. Patent with other undergoing the patent process. Printed in the U.S.A. JUNE 2014/06

Vandal Resistant Low Flow Aerator with Dual Interlocking Technology

FXR-LAV-AER-1000 Series

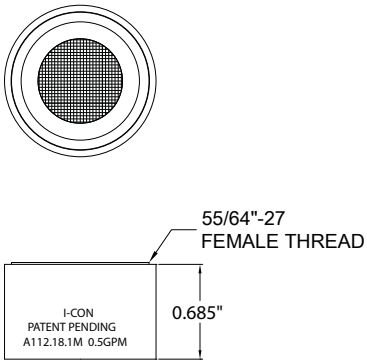

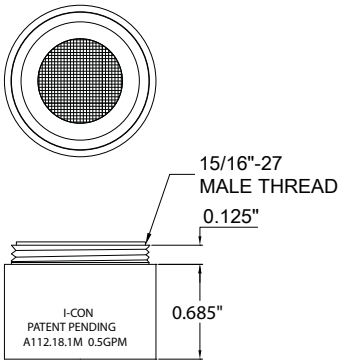

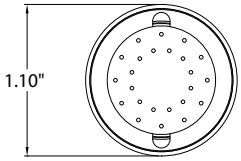

Patent Pending.

► Description

The I-CON Vandal Resistant Low Flow Aerator is designed for high security areas. It's patented Dual Interlocking Technology provides an added level of security requiring an I-CON master key for removal while maintaining a 0.5 GPM flow control for increased water conservation.

► Housing Options (choose one)

- ☐ Male thread
- ☐ Female thread

Specifications

- Vandal Resistant
- Dual Interlocking Technology
- 0.5 GPM flow rate meets ASRAE standards for energy conservation
- Self Cleaning/Maintenance Free
- Low Noise - not to exceed 20 Dbs at 50PSI
- Spray Stream Pattern to provide full coverage and improved wetting.
- Full metal construction for maximum durability.

► Accessories

See Accessories Section of the I-CON catalog or contact our Customer Service Team for details.

This space is for Architect/Engineer approval

The information contained in this document is subject to change without notice.

I-CON Systems, Inc. • 3100 Camp Road, Oviedo, FL 32765 • Toll Free (800) 240-3578 • Fax (407) 365-7944 • www.i-con.com

©2014 I-CON Systems, Inc. One or more products contained herein are protected by U.S. Patent with other undergoing the patent process. Printed in the U.S.A. AUG 2016/08

Core Drill Assembly

MHW-CDA Series

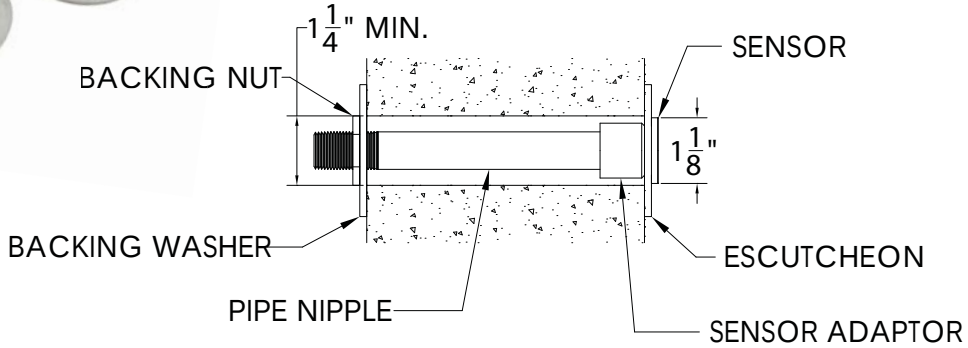

TruTOUCH® Sensors Sold Separately

► **Description**

I-CON's Core Drill Assembly is used when there is no access to the rear of the fixture from the chase area or when controlling a water closet fixture set by itself. When retrofitting older style lavatory valves, the unit can be used to secure the fixture to the wall when the older lavatory valve and push buttons are removed.

► **Pipe Nipple Length** (choose one)

☐ 1" ☐ 2" ☐ 4" ☐ 5" ☐ 6" ☐ 8"
☐ 9" ☐ 10" ☐ 12"

► **Escutcheon Diameter** (choose one)

☐ 2-3/8" ☐ 2-7/8" ☐ 4" ☐ 6"

► **Backing Support** (choose one)

☐ 2" Backing Washer
☐ 7-3/4" Wide Backing Bar

Specifications

- Stainless Steel Housing
- Part number will vary according to application and wall thicknesses

► **Accessories**

See Accessories Section of the I-CON catalog or contact our Customer Service Team for details.

This space is for Architect/Engineer approval

The information contained in this document is subject to change without notice.

I-CON Systems, Inc. • 3100 Camp Road, Oviedo, FL 32765 • Toll Free (800) 240-3578 • Fax (407) 365-7944 • www.i-consystems.com

©2016 I-CON Systems, Inc. One or more products contained herein are protected by U.S. Patent with other undergoing the patent process. Printed in the U.S.A. DEC 2016/12

Polyurethane Tubing

MHW-TB Series

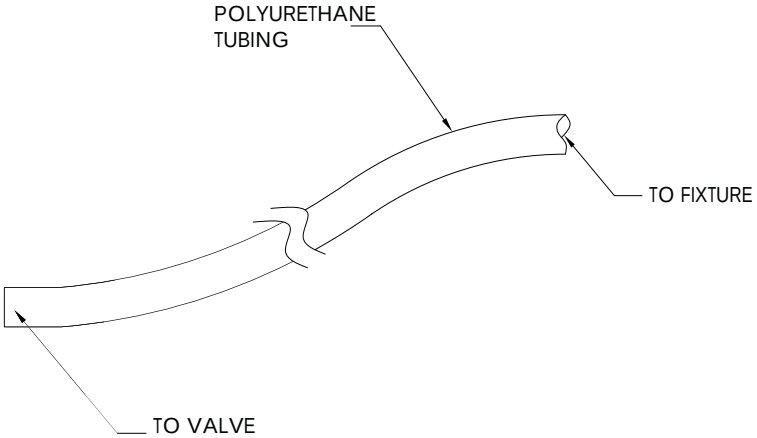

► **Description**

The I-CON Polyurethane Tubing is used to transfer water from the I-CON valve to the fixture.

Specifications

- Polyurethane Tubing
- Flexible for Installation

► **Tubing Sizes Available** (choose one or more)

- ☐ 1/4" OD; 1/8" ID; 1/16" Wall
- ☐ 3/8" OD; 1/4" ID, 1/16" Wall
- ☐ 1/2" OD; 3/8" ID; 1/16" Wall
- ☐ 5/8" OD; 1/2" ID; 1/16" Wall

► **Accessories**

See Accessories Section of the I-CON catalog or contact our Customer Service Team for details.

This space is for Architect/Engineer approval

The information contained in this document is subject to change without notice.

I-CON Systems, Inc. • 3100 Camp Road, Oviedo, FL 32765 • Toll Free (800) 240-3578 • Fax (407) 365-7944 • www.i-con.com

©2017 I-CON Systems, Inc. One or more products contained herein are protected by U.S. Patent with other undergoing the patent process. Printed in the U.S.A. JUL 2017/18

Anti Blowout Grip Ring

MHW-VB-5011-ABR

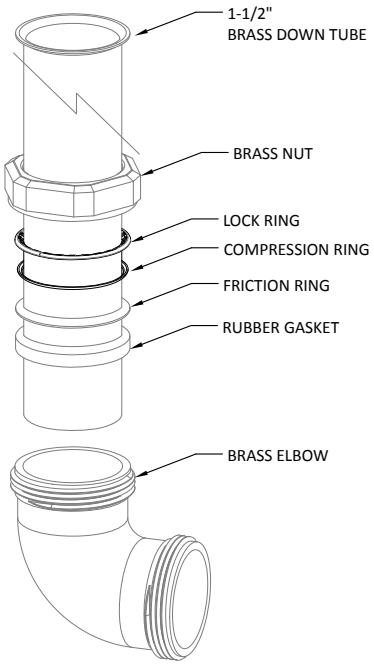

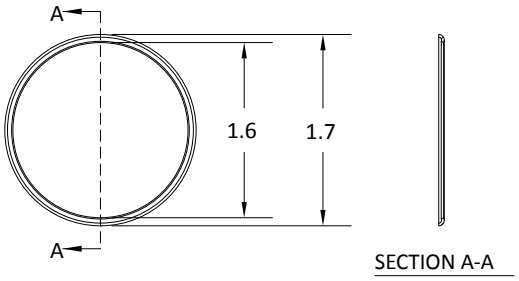

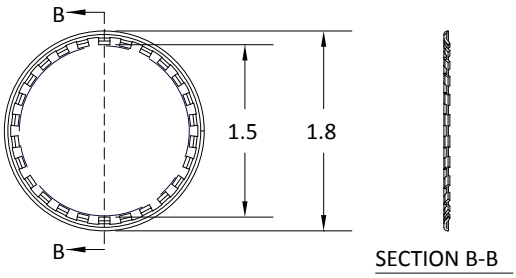

Patent Pending.

► Description

I-CON's Anti Blowout Grip Ring is designed to reduce blowout failures by increasing the holding force of a common slip joint. The two ring assembly is comprised of a lock ring with 26 teeth that bite and lock into the down tube when compressed by the compression ring. *Note: Anti Blowout Grip Rings are packaged (12) ring sets per pack.*

Specifications

- Made of stainless steel for increased strength and corrosion resistance.
- Designed for use on chrome plated, raw brass and all scratch threaded 1-1/2" vacuum breaker tubes.

► Accessories

See Accessories Section of the I-CON catalog or contact our Customer Service Team for details.

This space is for Architect/Engineer approval

The information contained in this document is subject to change without notice.

I-CON Systems, Inc. • 3100 Camp Road, Oviedo, FL 32765 • Toll Free (800) 240-3578 • Fax (407) 365-7944 • www.i-consystems.com

©2013 I-CON Systems, Inc. One or more products contained herein are protected by U.S. Patent with other undergoing the patent process. Printed in the U.S.A. DEC 2015/01

Vacuum Breaker Rebuild Kit

MHW-VB-5011-VBR

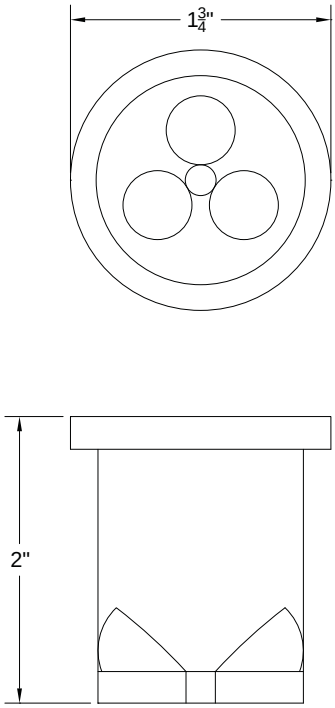

Description

I-CON's Vacuum Breaker rebuild kit is a back flow prevention system designed to stop water from reentering the flush valve chamber.

Specifications

- (1) one Vaccum Breaker

Accessories

See Accessories Section of the I-CON catalog or contact our Customer Service Team for details.

This space is for Architect/Engineer approval

The information contained in this document is subject to change without notice.

I-CON Systems, Inc. • 3100 Camp Road, Oviedo, FL 32765 • Toll Free (800) 240-3578 • Fax (407) 365-7944 • www.i-con.com

©2017 I-CON Systems, Inc. One or more products contained herein are protected by U.S. Patent with other undergoing the patent process. Printed in the U.S.A. JUL 2017/18

Exposed Manual Flush Valve for Water Closets; Top Spud; 11.5” Rough in

VLV-FVL-3010-W Series powered by ProLAST®

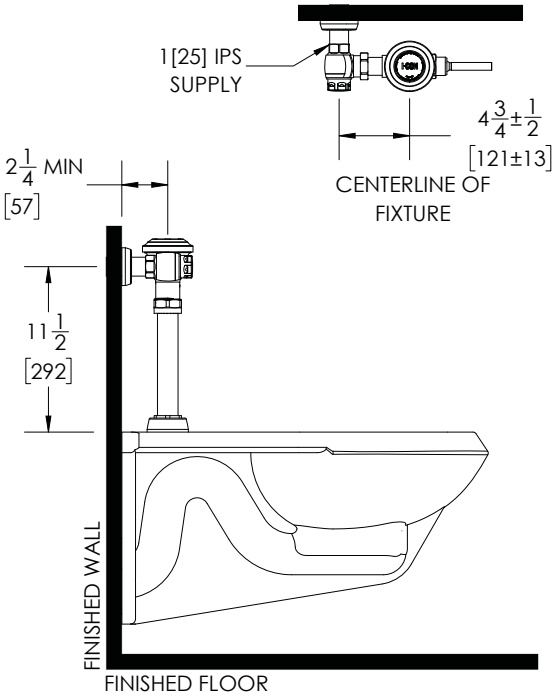

Engineering Specifications

I-CON 3010 Series Exposed Water Closet Flush Valve powered by ProLAST® – Manually operated, dynamic sealing, chrome plated flush valve with a polished exterior. Complete with the I-CON patented ProLAST® kit, single piece design with integral bypass filter, glass reinforced polymer with overmolded seals to eliminate all O-rings from the assembly. The valve is ADA compliant with a non-hold open and no leak handle feature, one piece hex coupling nut, high back pressure vacuum breaker, adjustable tailpiece, spud coupling and flange for top spud connection. Control stop has vandal resistant stop cap, sweat solder kit and wall flange.

Valve Type

Water Closet

ProLAST® Flush Volume

- ☐ 1.1 gpf / 4.2 Lpf*
- ☐ 1.6 gpf / 6.0 Lpf
- ☐ 1.28 gpf / 4.8 Lpf*
- ☐ 2.4 gpf / 9.0 Lpf

Accessories

For additional accessories, see the Accessories Section of the I-CON catalog or contact our Customer Service Team for details.

Product Highlights - Water Closet

- as low as 1.1 gpf / 4.2 Lpf flush volume
- 1” I.P.S. screwdriver stop
- Spud coupling and flange for 1-1/2” top spud
- Water conservation is aided by the ADA-compliant, non-hold-open handle, which prevents toilet from exceeding intended flush volume
- Flush accuracy is controlled by I-CON’s ProLAST® dynamic valve technology
- Clog resistant bypass
- Vandal-resistant stop cap
- Adjustable tailpiece accommodates a variety of height requirements

***WaterSense Certified*

Note: Must be combined with matching flush rate WaterSense labeled Water Closet fixture to ensure complete system meets specified water efficiency performance.

This space is for Architect/Engineer approval

The information contained in this document is subject to change without notice.

I-CON Systems, Inc. • 3100 Camp Road, Oviedo, FL 32765 • Toll Free (800) 240-3578 • Fax (407) 365-7944 • www.i-con.com

©2018 I-CON Systems, Inc. One or more products contained herein are protected by U.S. Patent with other undergoing the patent process. Printed in the U.S.A. FEB 2018/02

Z5615-BWL

HET Elongated Wall Hung EcoVantage® Flush Valve Toilet System

TAG _____

Z5615 Series Elongated

Suffix Options:

☐ **-RF** Retro-Fit Nut Kit for extending carrier studs from existing wall.

Recommended Trim:

☐ **Z5955SS-EL** Elongated, standard white, open front toilet seat less cover with stainless steel check hinge.

Note: To ensure system performance:
Minimum Running Water Pressure = 25 psi.

These dimensions and specifications are subject to change without notice.

Fixture dimensions meet ANSI/ASME standard A112.19.2 and CAN/CSA B45 requirements.
Meets the American Disabilities Guidelines and ANSI A117.1 requirements when installed according to these requirements.

EcoVantage® is a registered trademark of Zurn Industries

ZURN INDUSTRIES, LLC. ♦ COMMERCIAL BRASS OPERATION
5900 ELWIN BUCHANAN DRIVE ♦ SANFORD NC 27330
PHONE: 1-800-997-3876 ♦ FAX: 919-775-3541
WWW.ZURN.COM
IN CANADA: ZURN INDUSTRIES LIMITED
3544 NASHUA DRIVE ♦ MISSISSAUGA, ONTARIO L4V1L2
PHONE: 905-405-8272 FAX: 905-405-1292

Z5615 HET Series

- Zurn High Efficiency Toilets and paired performance flush valve systems are designed to exceed industry standards, while using as little as 1.1 gallons of water per flush.
- Universal high efficiency toilet can be specified with 1.28 gpf [4.8Lpf], 1.6 gpf [6.0 Lpf] or dual flush valves.
- Vitreous china
- Elongated front rim
- 2-1/8" fully glazed trapway
- High efficiency siphon jet flush action
- Shipping Weight: 40 lbs.

Engineering Specification

☐Z5615-BWL
EcoVantage High Efficiency Toilet System
- Vitreous China, 1.1 gpf [4.2 Lpf] or greater high efficiency wall hung toilet with siphon jet flushing action and elongated front rim with 1-1/2" top spud. Universal high efficiency toilet is designed to exceed industry standards with flush volumes of 1.1 gallons per flush or higher.

***Replaces Zurn Z5610**

☐Z5616-BWL
EcoVantage High Efficiency Toilet System
- Vitreous China, 1.1 gpf [4.2 Lpf] or greater high efficiency wall hung toilet with siphon jet flushing action and elongated front rim with integral bedpan lugs and 1-1/2" top spud. Universal high efficiency toilet is designed to exceed industry standards with flush volumes of 1.1 gallons per flush or higher.

***Replaces Zurn Z5611**

Architectural/Engineering Approval

See Zurn One Systems for suggested packages.

Z5615-BWL

HET Elongated Wall Hung EcoVantage® Flush Valve Toilet System

TAG _____

Rough-in dimensions for Z5615 Series

• Z5615-BWL with top spud, shown with Z6000AV manual valve

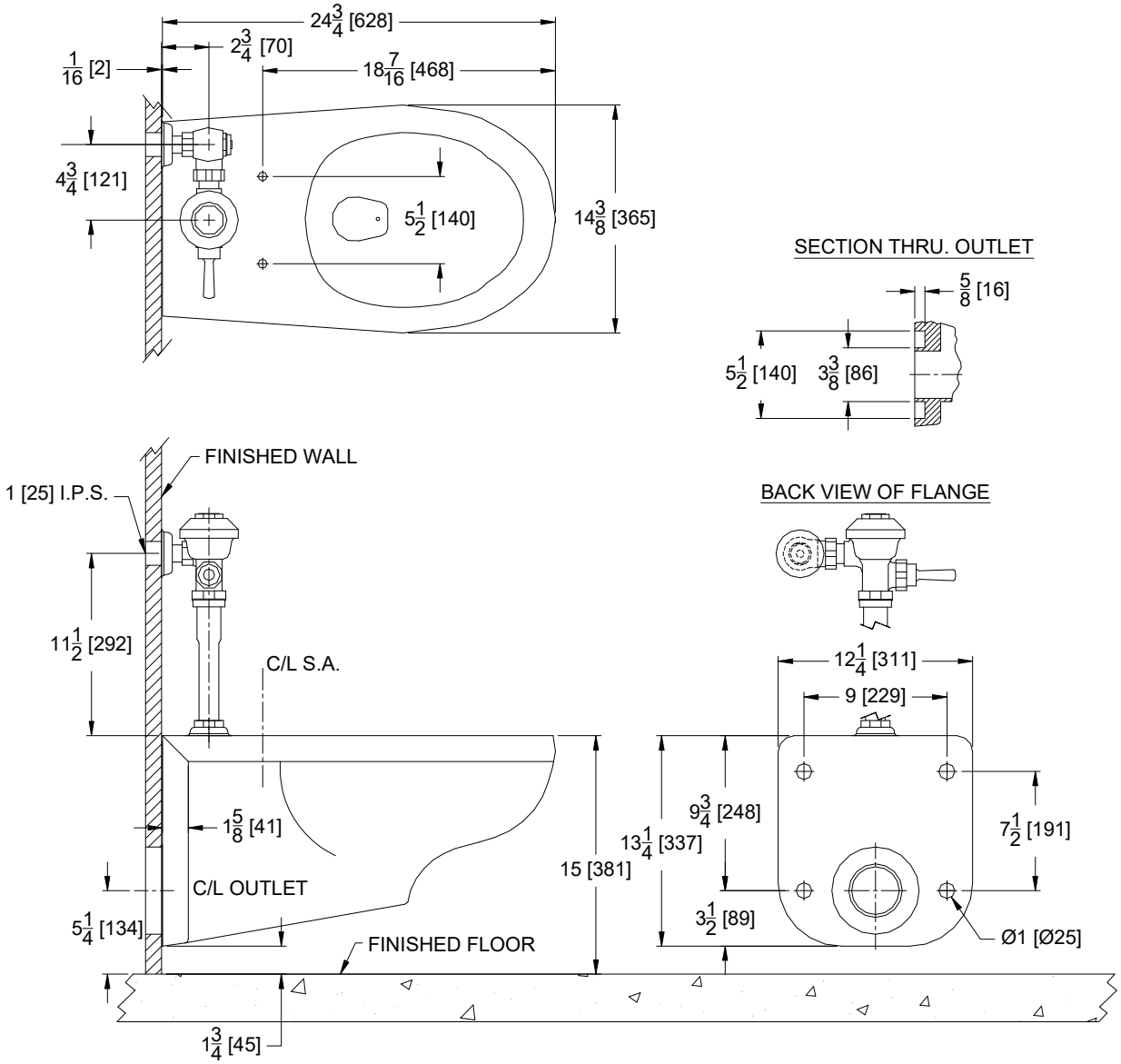

These dimensions and specifications are subject to change without notice.

Fixture dimensions meet ANSI/ASME standard A112.19.2 and CAN/CSA B45 requirements.

Note: For ADA compliance, rim height should be installed 17" from finished floor.

Meets the American Disabilities Guidelines and ANSI A117.1 requirements when installed according to these requirements.

ZURN INDUSTRIES, LLC. ♦ COMMERCIAL BRASS OPERATION
5900 ELWIN BUCHANAN DRIVE ♦ SANFORD NC 27330
PHONE: 1-800-997-3876 ♦ FAX: 919-775-3541
WWW.ZURN.COM
IN CANADA: ZURN INDUSTRIES LIMITED
3544 NASHUA DRIVE ♦ MISSISSAUGA, ONTARIO L4V1L2
PHONE: 905-405-8272 FAX: 905-405-1292

EcoVantage® is a registered trademark of Zurn Industries

Z5655-BWL

TAG _____

HET Elongated Floor Mounted EcoVantage® Flush Valve Toilet System

Z5655 Series Elongated

Z5655 HET Series

- Zurn High Efficiency Toilets and paired performance flush valve systems are designed to exceed industry standards while using as little as 1.1 gallons of water per flush.
- Universal high efficiency toilet can be specified with 1.28 gpf [4.8 lpf], 1.6 gpf [6.0 lpf] or dual flush valves.
- Vitreous china
- Elongated front rim
- 2-1/8" fully glazed trapway
- High efficiency siphon jet flush action
- Shipping Weight: 55 lbs.

Recommended Trim:

☐ **Z5955SS-EL** Elongated, standard white, open front toilet seat less cover with stainless steel check hinge.

☐ **Z5972-COMB** Closet bolt/wax ring kit

Note: To ensure system performance:
Minimum Running Water Pressure = 25 psi.

Option:

☐ **-VL** 4-Bolt

These dimensions and specifications are subject to change without notice.

Fixture dimensions meet ANSI/ASME standard A112.19.2 and CAN/CSA B45 requirements.

Engineering Specification

☐ **Z5655-BWL**
EcoVantage High Efficiency Toilet System
Vitreous China, 1.1 gpf [4.16 lpf] or greater high efficiency, floor mounted, bottom outlet toilet with siphon jet flushing action and elongated front rim with 1-1/2" top spud. This bowl is designed to perform to industry standards with as little as 1.1 gallons per flush.
*Replaces Zurn Z5650

☐ **Z5656-BWL**
EcoVantage High Efficiency Toilet System
Vitreous China, 1.1 gpf [4.16 lpf] or greater high efficiency, floor mounted, bottom outlet toilet with siphon jet flushing action and elongated front rim with integral bedpan lugs, and 1-1/2" top spud. This bowl is designed to perform to industry standards with as little as 1.1 gallons per flush.
*Replaces Zurn Z5651

Architectural/Engineering Approval

EcoVantage® is a registered trademark of Zurn Industries

See Zurn One Systems for suggested packages.

ZURN INDUSTRIES, LLC. ♦ COMMERCIAL BRASS OPERATION ♦ 5900 ELWIN BUCHANAN DRIVE ♦ SANFORD NC 27330
Phone: 1-800-997-3876 ♦ Fax: 919-775-3541 ♦ World Wide Web: www.zurn.com
In Canada: ZURN INDUSTRIES LIMITED ♦ 3544 Nashua Drive ♦ Mississauga, Ontario L4V1L2 ♦ Phone: 905-405-8272 Fax: 905-405-1292

EcoVantage® and AV are trademarks of Zurn Industries, LLC.

Rev. C
Dwg. No. 84357
Date: 7/20/12
Product No. Z5655-BWL

Z5655-BWL

TAG _____

HET Elongated Floor Mounted EcoVantage® Flush Valve Toilet System

Rough-in dimensions for Z5655 Series

• Z5655 with top spud, shown with Z6000AV-HET manual valve

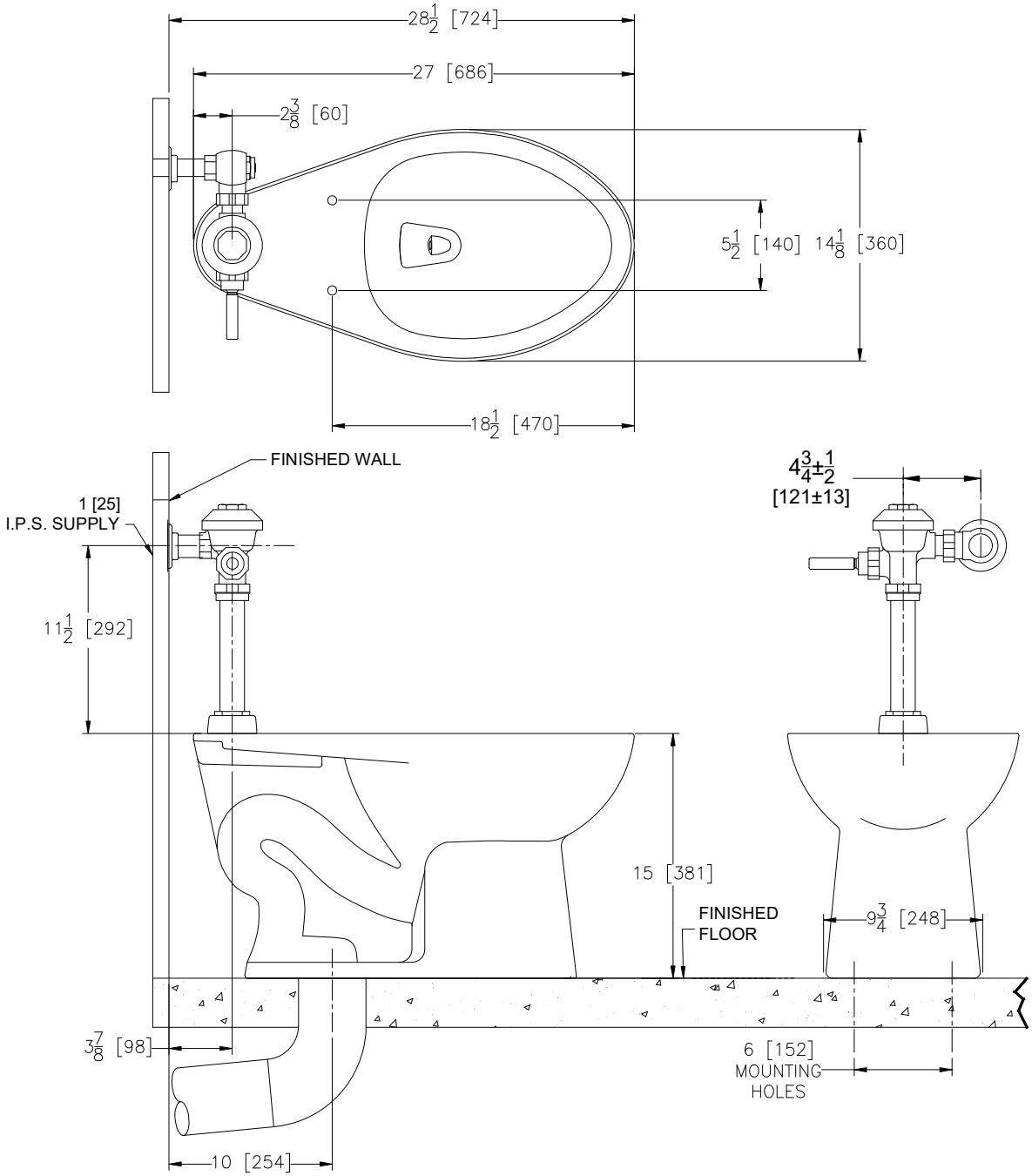

These dimensions and specifications are subject to change without notice.

Fixture dimensions meet ANSI/ASME standard A112.19.2 and CAN/CSA B45 requirements.

EcoVantage® is a registered trademark of Zurn Industries

ZURN INDUSTRIES, LLC. ♦ COMMERCIAL BRASS OPERATION ♦ 5900 ELWIN BUCHANAN DRIVE ♦ SANFORD NC 27330
Phone: 1-800-997-3876 ♦ Fax: 919-775-3541 ♦ World Wide Web: www.zurn.com
In Canada: ZURN INDUSTRIES LIMITED ♦ 3544 Nashua Drive ♦ Mississauga, Ontario L4V1L2 ♦ Phone: 905-405-8272 Fax: 905-405-1292

EcoVantage® and AV are trademarks of Zurn Industries, LLC.

Rev. C
Dwg. No. 84357

Date: 7/20/12
Product No. Z5655-BWL

Z5665-BWL

TAG _____

HET Elongated Floor Mounted, ADA Height EcoVantage Flush Valve Toilet System

Z5665 Series Elongated

Z5665 HET Series

- Zurn High Efficiency Toilets and paired performance flush valve systems are designed to exceed industry standards while using as little as 1.1 gallons of water per flush.
- Universal high efficiency toilet can be specified with 1.28 gpf [4.8 lpf], 1.6 gpf [6.0 lpf] or dual flush valves.
- Vitreous china
- ADA height
- Elongated front rim
- 2 1/8" fully glazed trapway
- High efficiency siphon jet flush action
- Shipping Weight: 57 lbs.

Recommended Trim:

☐ **Z5955SS-EL** Elongated, standard white, open front toilet seat less cover with stainless steel check hinge.

☐ **Z5972-COMB** Closet bolt/wax ring kit

Note: To ensure system performance:
Minimum Running Water Pressure = 25 psi.

Option:

☐ **-VL** 4-Bolt

These dimensions and specifications are subject to change without notice.

Fixture dimensions meet ANSI/ASME standard A112.19.2 and CAN/CSA B45 requirements.

Meets the American Disabilities Guidelines and ANSI A117.1 requirements when installed according to these requirements.

EcoVantage® is a registered trademark of Zurn Industries

Engineering Specification

☐ **Z5665-BWL**
EcoVantage High Efficiency Toilet System
Vitreous China, 1.1 gpf [4.16 lpf] or greater high efficiency, ADA, floor mounted, bottom outlet toilet with siphon jet flushing action and elongated front rim with 1-1/2" top spud. This bowl is designed to perform to industry standards with as little as 1.1 gallons per flush.
*Replaces Zurn Z5660

☐ **Z5666-BWL**
EcoVantage High Efficiency Toilet System
Vitreous China, 1.1 gpf [4.16 lpf] or greater high efficiency, ADA, floor mounted, bottom outlet toilet with siphon jet flushing action and elongated front rim with integral bedpan lugs, and 1-1/2" top spud. This bowl is designed to perform to industry standards with as little as 1.1 gallons per flush.
*Replaces Zurn Z5661

Architectural/Engineering Approval

See Zurn One Systems for suggested packages.

ZURN INDUSTRIES, LLC. ♦ COMMERCIAL BRASS OPERATION ♦ 5900 ELWIN BUCHANAN DRIVE ♦ SANFORD NC 27330
Phone: 1-800-997-3876 ♦ Fax: 919-775-3541 ♦ World Wide Web: www.zurn.com
In Canada: ZURN INDUSTRIES LIMITED ♦ 3544 Nashua Drive ♦ Mississauga, Ontario L4V1L2 ♦ Phone: 905-405-8272 Fax: 905-405-1292

EcoVantage® and AV are trademarks of Zurn Industries, LLC.

Z5665-BWL

TAG _____

HET Elongated Floor Mounted, ADA Height EcoVantage Flush Valve Toilet System

Rough-in dimensions for Z5665 Series

• Z5665 with top spud, shown with Z6000AV-HET valve

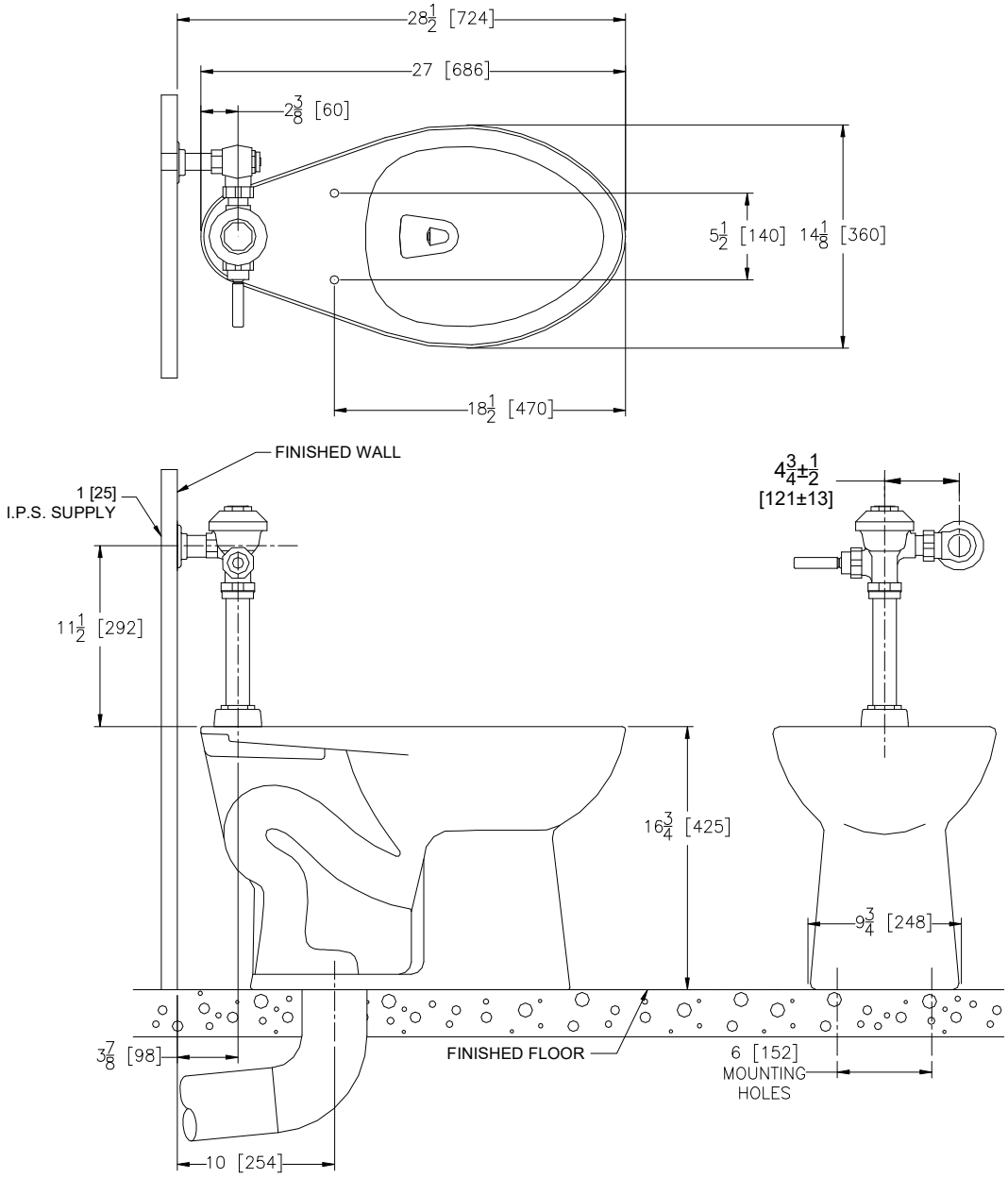

These dimensions and specifications are subject to change without notice.

Fixture dimensions meet ANSI/ASME standard A112.19.2 and CAN/CSA B45 requirements.

Meets the American Disabilities Guidelines and ANSI A117.1 requirements when installed according to these requirements.

EcoVantage® is a registered trademark of Zurn Industries

ZURN INDUSTRIES, LLC. ♦ COMMERCIAL BRASS OPERATION ♦ 5900 ELWIN BUCHANAN DRIVE ♦ SANFORD NC 27330
Phone: 1-800-997-3876 ♦ Fax: 919-775-3541 ♦ World Wide Web: www.zurn.com
In Canada: ZURN INDUSTRIES LIMITED ♦ 3544 Nashua Drive ♦ Mississauga, Ontario L4V1L2 ♦ Phone: 905-405-8272 Fax: 905-405-1292

EcoVantage® and AV are trademarks of Zurn Industries, LLC.

Z5535

EcoVantage® High Efficiency, 1.28 GPF,
Elongated, Siphon Jet Toilet

TAG _____

Z5535 HET Series

- 1.28 gpf (gallons per flush)
- High efficiency toilets (HET) reduces potable water usage over 20%
- Vitreous china
- 3” Flush valve for powerful flushing
- Chrome plated handle
- Elongated front rim
- EcoVantage® siphon-jet design
- Extra large foot print for easy retro-fit
- 2 1/8” Fully glazed trapway
- Chloramine resistant internal components
- Heavy-duty stabilizers for rigid tank to bowl connection
- Concealed sanitary bar
- 2 1/2” Trap seal
- Large 10” x 8” water surface
- Includes bolt caps
- Shipping weight: 89 lbs.

Suffix Options:

___ **-RH** Vitreous China right-hand lever tank
___ **-VL** Vitreous China lid with vandal-proof lockdown
___ **-IN** Insulated tank

Recommended Trim:

☐ **Z5958SS-EL** Elongated, white, closed front toilet seat with cover & stainless steel check hinge.
☐ **Z5972-COMB** Closet bolt & wax ring kit.
☐ **Z8800-CR** Standard stop with flexible closet riser.

Optional Trim

☐ **Z5975-FLO-JR**
PVC Flo-Bowl Jr. closet flange kit

These dimensions and specifications are subject to change without notice.

Fixture dimensions meet ANSI/ASME standard A112.19.2-2003 and CAN/CSA B45 requirements.

Engineering Specification:

☐ **Z5535** Vitreous china, high efficiency, 1.28 gpf [4.8 Lpf] low consumption, high performance siphon-jet toilet with 3” flush valve, elongated front rim and 12” standard rough-in.

Note: Call for availablity of multiple suffix options.

This space is for Architectural/engineering Approval

See Zurn One Systems for suggested packages.

ZURN INDUSTRIES, INC. ♦ COMMERCIAL BRASS OPERATION ♦ 5900 ELWIN BUCHANAN DRIVE ♦ SANFORD NC 27330
Phone: 1-800-997-3876 ♦ Fax: 919-775-3541 ♦ World Wide Web: www.zurn.com
In Canada: ZURN INDUSTRIES LIMITED ♦ 3544 Nashua Drive ♦ Mississauga, Ontario L4V1L2 ♦ Phone: 905-405-8272 Fax: 905-405-1292

Z5535

EcoVantage® High Efficiency, 1.28 GPF,
Elongated, Siphon Jet Toilet Rough-In

TAG _____

Rough-in Dimensions for Z5535 Series

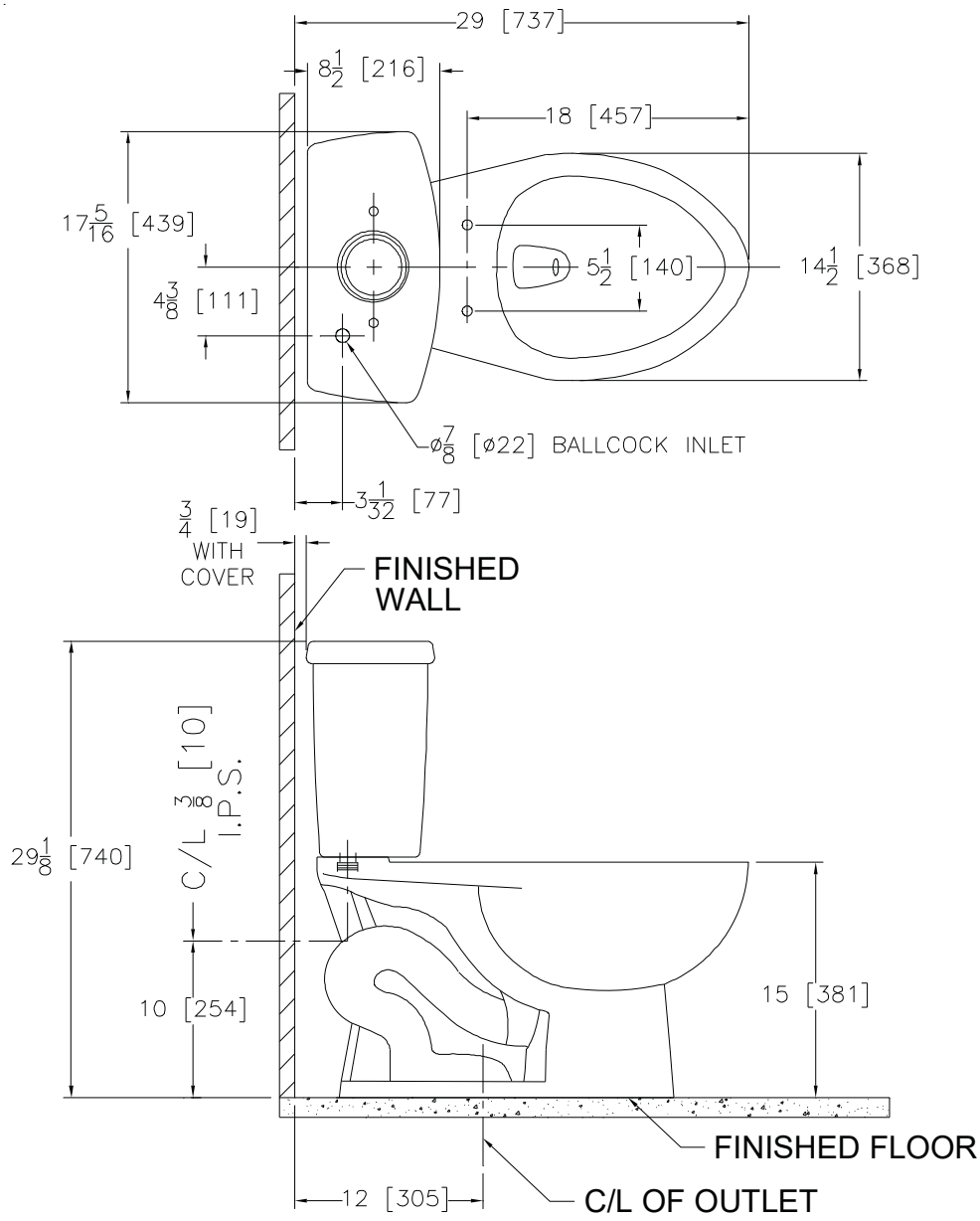

FOOTPRINT

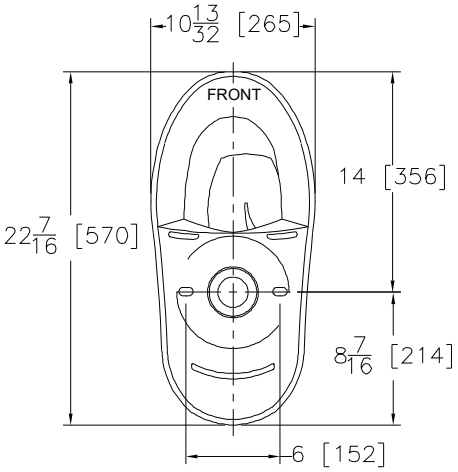

These dimensions and specifications are subject to change without notice.

Fixture dimensions meet ANSI/ASME standard A112.19.2-2003 and CAN/CSA B45 requirements.

ZURN INDUSTRIES, INC. ♦ COMMERCIAL BRASS OPERATION ♦ 5900 ELWIN BUCHANAN DRIVE ♦ SANFORD NC 27330
Phone: 1-800-997-3876 ♦ Fax: 919-775-3541 ♦ World Wide Web: www.zurn.com
In Canada: ZURN INDUSTRIES LIMITED ♦ 3544 Nashua Drive ♦ Mississauga, Ontario L4V1L2 ♦ Phone: 905-405-8272 Fax: 905-405-1292

REV. **DWG. NO.** 84132 **DATE:** 03/12/09 **C.N. NO.** 99789 **PRODUCT NO.** Z5535

Z5555

EcoVantage® High Efficiency, 1.28 GPF,
ADA, Elongated, Siphon Jet Toilet

TAG _____

Z5555 HET Series

- 1.28 gpf (gallons per flush)
- High efficiency toilets (HET) reduces potable water usage over 20%
- Vitreous china
- 3” Flush valve for powerful flushing
- Chrome plated handle
- ADA/Comfort height elongated front rim
- EcoVantage® siphon-jet design
- Extra large foot print for easy retro-fit
- 2 1/8” Fully glazed trapway
- Chloramine resistant internal components
- Heavy-duty stabilizers for rigid tank to bowl connection
- Concealed sanitary bar
- 2 1/2” Trap seal
- Large 10” x 8” water surface
- Includes bolt caps
- Shipping weight: 92 lbs.

Suffix Options:

___ **-RH** Vitreous China right-hand lever tank
___ **-VL** Vitreous China lid with vandal-proof lockdown
___ **-IN** Insulated tank

Recommended Trim:

☐ **Z5958SS-EL** Elongated, white, closed front toilet seat with cover & stainless steel check hinge.
☐ **Z5972-COMB** Closet bolt & wax ring kit.
☐ **Z8800-CR** Standard stop with flexible closet riser.

Optional Trim

☐ **Z5975-FLO-JR**
PVC Flo-Bowl Jr. closet flange kit

These dimensions and specifications are subject to change without notice.

Fixture dimensions meet ANSI/ASME standard A112.19.2-2003 and CAN/CSA B45 requirements.

Engineering Specification:

☐ **Z5555** Vitreous china, high efficiency, 1.28 gpf [4.8 Lpf] low consumption, high performance siphon-jet toilet with 3” flush valve, ADA/ Comfort height, elongated front rim and 12” standard rough-in.

Note: Call for availablity of multiple suffix options.

This space is for Architectural/engineering Approval

See Zurn One Systems for suggested packages.

ZURN INDUSTRIES, INC. ♦ COMMERCIAL BRASS OPERATION ♦ 5900 ELWIN BUCHANAN DRIVE ♦ SANFORD NC 27330
Phone: 1-800-997-3876 ♦ Fax: 919-775-3541 ♦ World Wide Web: www.zurn.com
In Canada: ZURN INDUSTRIES LIMITED ♦ 3544 Nashua Drive ♦ Mississauga, Ontario L4V1L2 ♦ Phone: 905-405-8272 Fax: 905-405-1292

Z5555

EcoVantage® High Efficiency, 1.28 GPF,
ADA, Elongated, Siphon Jet Toilet-Rough-In

TAG _____

Rough-in Dimensions for Z5555 Series

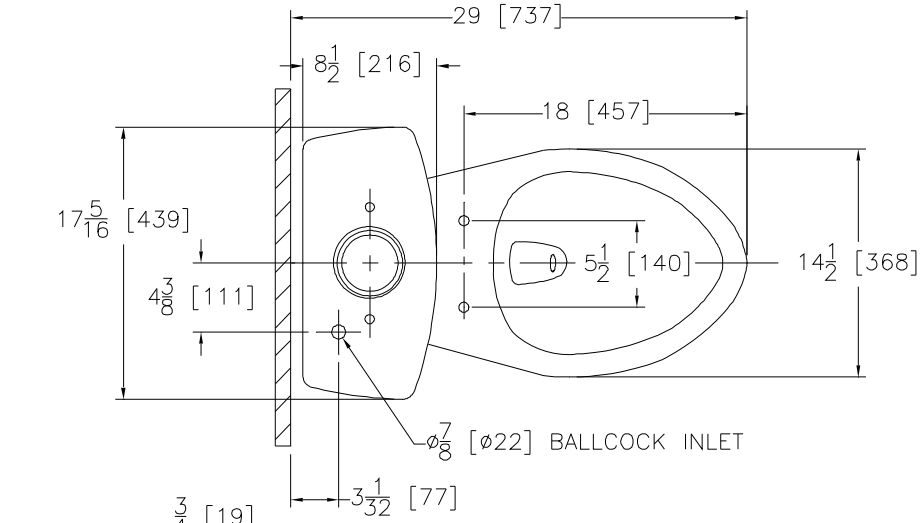

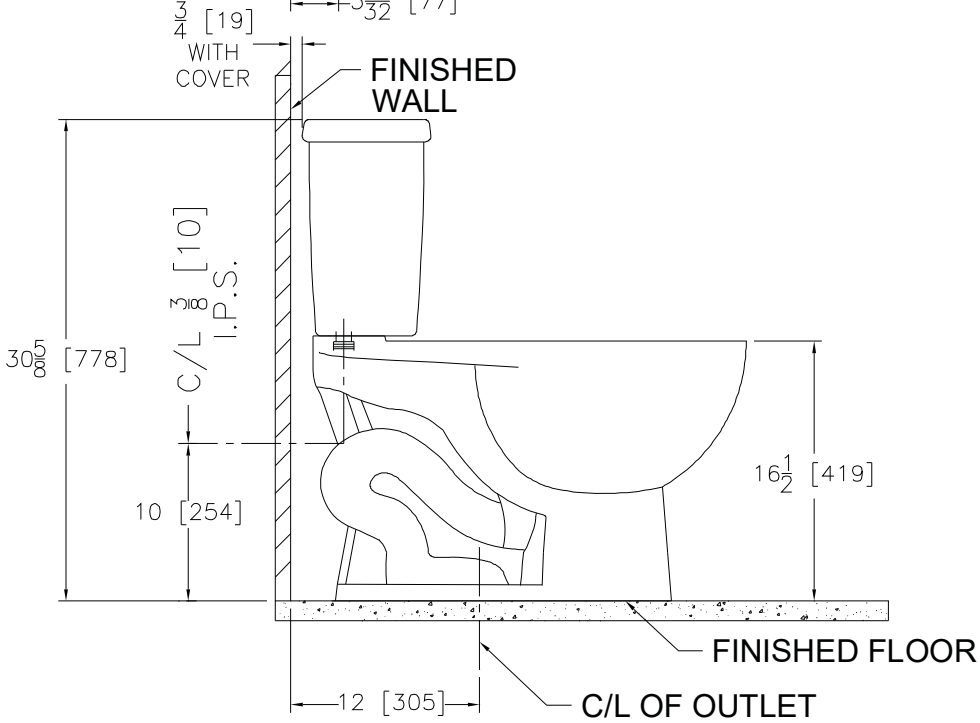

FOOTPRINT

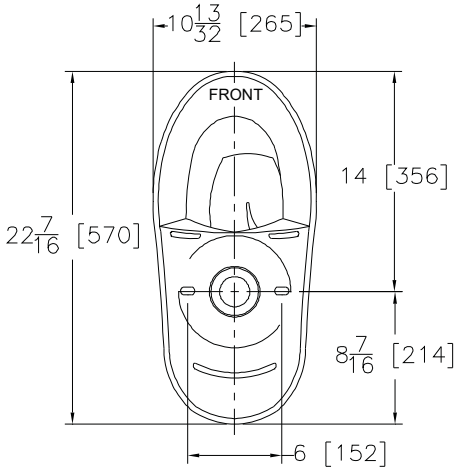

These dimensions and specifications are subject to change without notice.

Fixture dimensions meet ANSI/ASME standard A112.19.2-2003 and CAN/CSA B45 requirements.

ZURN INDUSTRIES, INC. ♦ COMMERCIAL BRASS OPERATION ♦ 5900 ELWIN BUCHANAN DRIVE ♦ SANFORD NC 27330
Phone: 1-800-997-3876 ♦ Fax: 919-775-3541 ♦ World Wide Web: www.zurn.com
In Canada: ZURN INDUSTRIES LIMITED ♦ 3544 Nashua Drive ♦ Mississauga, Ontario L4V1L2 ♦ Phone: 905-405-8272 Fax: 905-405-1292

REV. **DWG. NO.** 84136 **DATE:** 03/13/09 **C.N. NO.** 99795 **PRODUCT NO.** Z5555

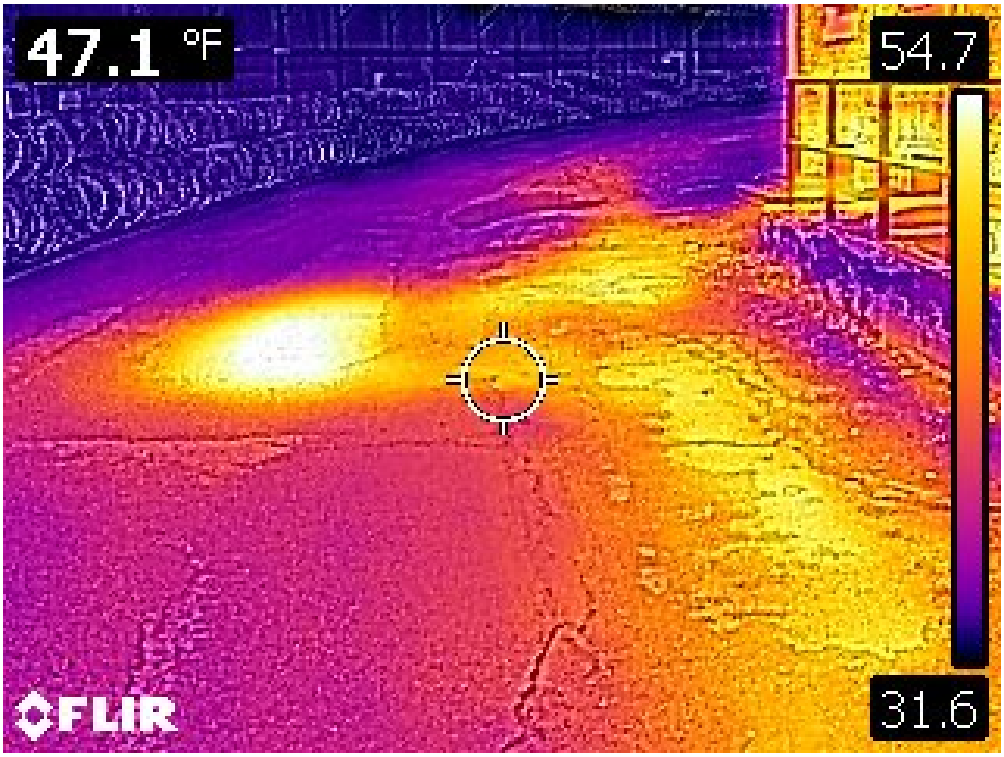
47.1 °F
54.7
31.6
FLIR

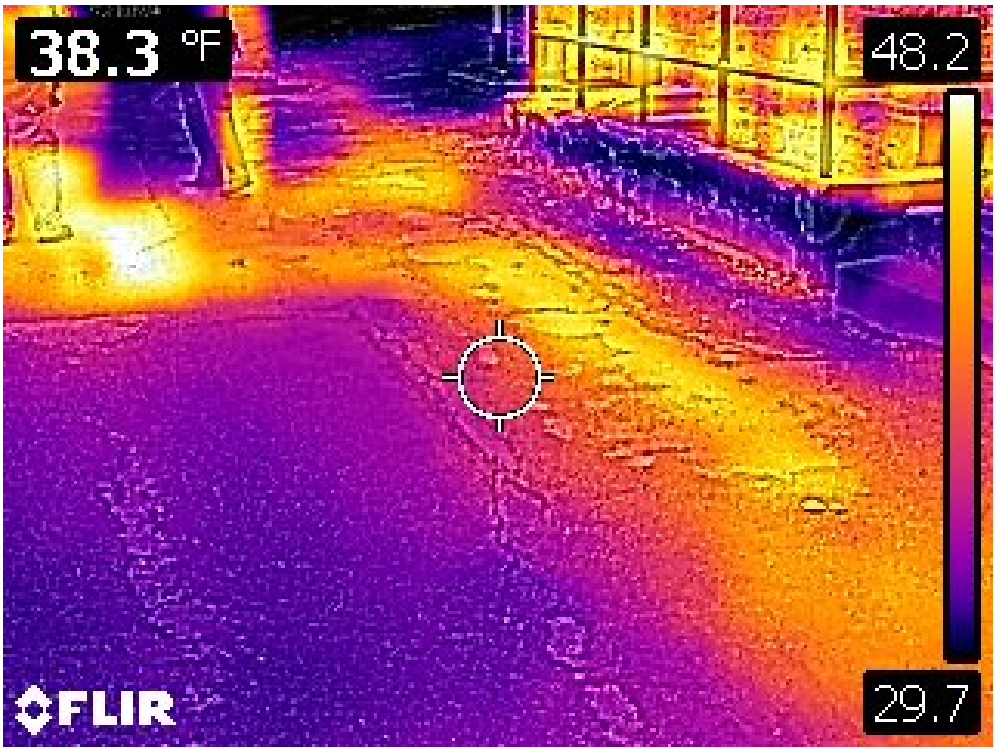
38.3 °F
48.2
29.7
FLIR

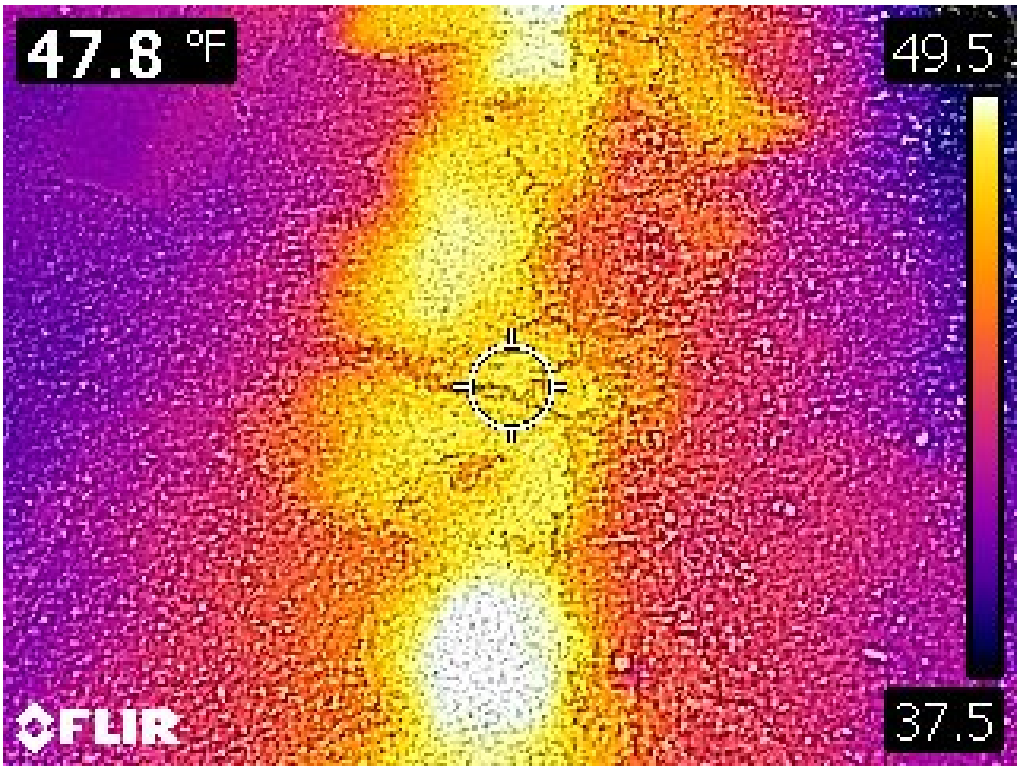
47.8 °F
49.5
37.5
FLIR

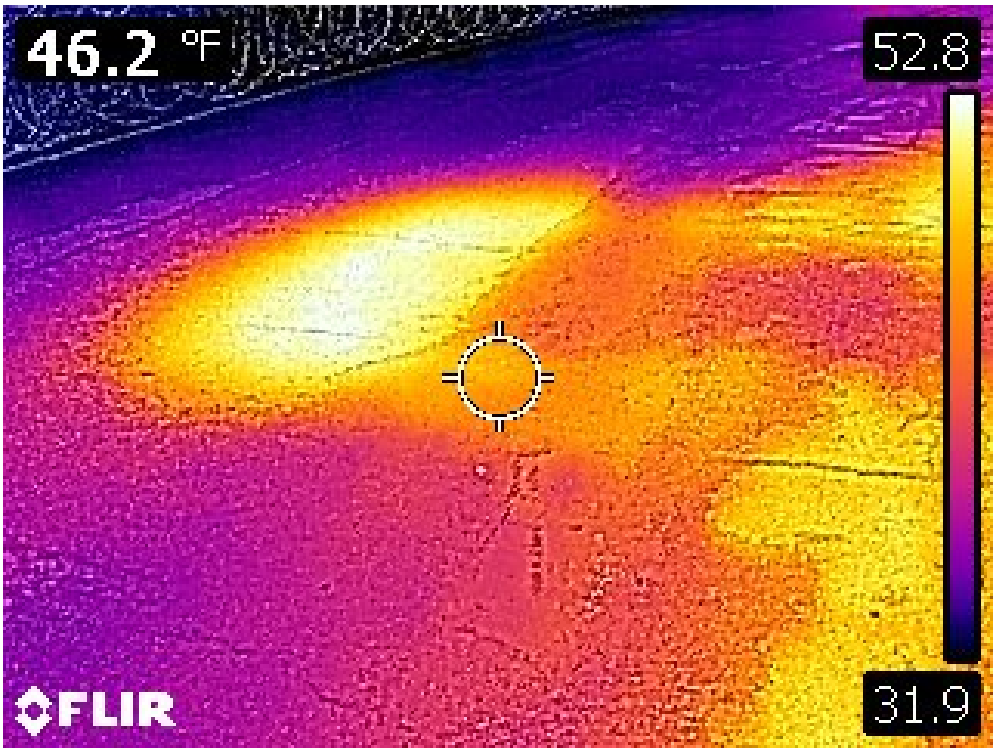
46.2 °F
52.8
31.9
FLIR

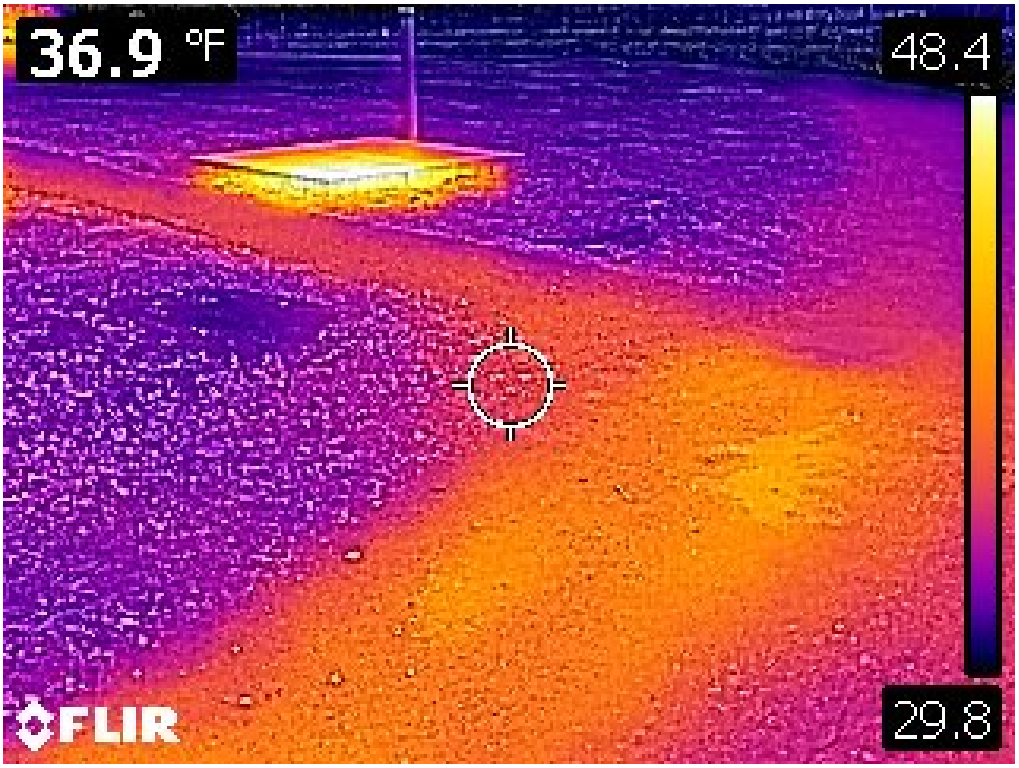
36.9 °F
48.4
29.8
FLIR

35.4 °F
43.1
18.8